TM 11-6625-535-15-1

DEPARTMENT OF THE ARMY TECHNICAL MANUAL

ORGANIZATIONAL, DIRECT SUPPORT, GENERAL SUPPORT
AND DEPOT MAINTENANCE MANUAL
INCLUDING REPAIR PARTS AND SPECIAL TOOLS LISTS

OSCILLOSCOPES AN/USM-140B, AN/USM-140C, AN/USM-141A, AND AN/USM-141B

This copy is a reprint which includes current pages from Changes 1 and 2. The title is changed by Change 2 to read as shown above.

HEADQUARTERS, DEPARTMENT OF THE ARMY
MAY 1966

HEADQUARTERS
DEPARTMENT OF THE ARMY
WASHINGTON, D.C., *5 May 1966*

TM 11-6625-535-15-1 (a reprint of Navy Publication NAVSHIPS 95706, 24 March 1964) is published for the use of all concerned.

By Order of the Secretary of the Army:

HAROLD K. JOHNSON,
General, United States Army,
Chief of Staff.

Official:

J. C. LAMBERT,
Major General, United States Army,
The Adjutant General.

Distribution:

Active Army:

USASA (2)
CNGB (1)
CC-E (7)
Dir of Trans (1)
CofEngrs (1)
TSG (1)
CofSptS (1)
USAAVNTBD (5)
USACDCEA (1)
USACDCCBRA (1)
USACDCCEA (1)
USACDCCEA
Ft Huachuca (1)
USACDCOA (1)
USACDCQMA (1)
USACDCTA (1)
USACDCADA (1)
USACDCARMA (1)
USACDCAVNA (1)
USACDCARTYA (1)
USACDCSWA (1)
USAMC (5)
USCONARC (5)
ARADCOM (5)
ARADCOM Rgn (2)
OS Maj Comd (4) except
USASETAF (5)
USASCC (ME) (5)
LOGCOMD (2)
USAMICOM (4)
USASMC (2)
USASCC (4)
USAECOM (30)
USASPTCP (11)
MDW (1)
Armies (2) except
7th USA (5)
EUSA (5)
Corps (2)
USAC (3)
11th Air Aslt Div (3)
507th USASA Gp (5)
508th USASA Gp (5)
318th USASA Bn (5)
319th USASA Bn (5)
320th USASA Bn (5)
251st USASA Co (5)
1st USASA Fld Sta (5)
2d USASA Fld Sta (5)
3d USASA Fld Sta (5)
4th USASA Fld Sta (5)
5th USASA Fld Sta (5)
9th USASA Fld Sta (5)
12th USASA Fld Sta (5)
13th USASA Fld Sta (5)
14th USASA Fld Sta (5)
15th USASA Fld Sta (5)
Svc Colleges (2)
Br Svc Sch (2) except
USAADS (5)
USACSS (5)
USASCS (40)
USASESCS (60)
USATC AD (2)
USATC Armor (2)
USATC Engr (2)
USATC Inf (2)
USASTC (2)
WRAMC (1)
Army Pic Cen (2)
USACDCEC (10)
USATTC (5)
Instl (2) except
Ft Monmouth (70)
Ft Hancock (4)
Ft Gordon (10)
Ft Huachuca (10)
WSMR (5)

CHANGE
No. 2

HEADQUARTERS
DEPARTMENT OF THE ARMY
WASHINGTON, D.C., *8 October 1971*

Organizational, Direct Support, General Support, and Depot Maintenance Manual Including Repair Parts and Special Tools List OSCILLOSCOPES AN/USM–140B, AN/USM–140C, AN/USM–141A, AND AN/USM–141B

TM 11–6625–535–15–1, 5 May 1966, is changed as follows:

1. Title is changed as shown above.
2. Remove and insert pages as indicated in the page list below:

Remove	*Insert*
None	A4–1 through A4–5
	1 through 48

3. File this change sheet in the front of the publication for reference purposes.

By Order of the Secretary of the Army:

W. C. WESTMORELAND,
General, United States Army,
Chief of Staff.

Official:

VERNE L. BOWERS,
Major General, United States Army,
The Adjutant General.

Distribution:

Active Army:

USASA (2)
CNGB (1)
ACSC–E (2)
Dir of Trans (1)
COE (1)
TSG (1)
CofSpts (1)
USAARENBD (2)
USAMB (10)
USAMC (1)
USAMICOM (4)
USATECOM (2)
USAESC (70)
USASTRATCOM (4)
USASTRATCOM–CONUS (10)
USACDC (2)
USACDC Agcy (1)
USACDCEC (10)
CONARC (5)
ARADCOM (2)
ARADCOM Rgn (2)
OS Maj Comd (4)
USARYIS (5)
LOGCOMD (5)
MDW (1)
Armies (2)
Corps (2)
1st Cav Div (3)

*This change supersedes TM 11–6625–535–25P–1, 29 September 1966.

Instl (2) except	11–215
Ft Carson (21)	11–216
Ft Gordon (10)	11–500(AA–AC, RL, RU, RV, RX)
Ft Huachuca (10)	12–67
WSMR (3)	12–77
Svc Colleges (2)	12–157
USASCS (20)	29–41
USASESS (20)	29–51
USAADS (5)	29–55
USAFAS (5)	29–57
USAARMS (5)	29–102
USAIS (5)	29–105
USAES (5)	29–109
USAINTS (3)	29–134
Army Dep (2) except	29–136
SAAD (30) LEAD (7)	29–138
LBAD (14) NAAD (5)	29–205
TOAD (14) SVAD (5)	29–206
ATAD (10)	29–245
Gen Dep (2)	29–247
Sig Sec, Gen Dep (5)	29–427
Sig Dep (10)	29–500
ATS (1)	30–34
MAAG (1)	32–56
WRAMC (1)	32–57
USARMIS (1)	32–87
ARADMAC (5)	32–97
USAERDAA (2)	44–8
USAERDAW (5)	44–112
USACRREL (2)	44–255
Sig FLDMS (2)	44–256
Units org under fol TOE: 2 ea.	55–99
6–615 67–2	55–405
6–616 77–100	55–406
9–247	55–407
11–15	55–457
11–16	55–458
11–17	55–510
11–19	57
11–117	57–100
11–158	

ARNG: State AG (3).

USAR: None.

For explanation of abbreviations used, see AR 310–50.

TEMPORARY CORRECTION T-2 TO THE TECHNICAL MANUAL FOR OSCILLOSCOPE AN/USM-140B, AN/USM-141A, NAVSHIPS 95706.

The purpose of this temporary correction is to correct minor errors in NAVSHIPS 95706 dated 20 May 1964 which were not covered in temporary correction page T-1, and to indicate changes in model numbers of certain items of the AN/USM-140B equipment. Insert this sheet in the manual immediately behind the front cover.

Make the following pen-and-ink corrections in the text of the manual.

PAGE NO.	ACTION
v, vi, vii, 1-0, 1-3, 1-6, 1-7, 2-3, 3-11, 4-1, 4-2, 4-3, 6-1, 6-2, 6-26, i-2, i-4	Where applicable, change: "CW-511/USM-105" to "CW-511A/USM"; "MX-3078/USM" to "MX-3078A/USM"; "MX-2817/U" to "MX-2817A/U"; "MX-2962/USM" to "MX-2962B/USM"; add the suffix "A" after "AN/USM-141".
2-2	In Figure 2-2, change "1-1/2" to "2-3/8", "19-3/4" to "18-3/8".
5-17	After para 5-5a, add "An unused replacement 7308 tube may exhibit a stabilizing action for about twenty-four hours of operation after it is first placed in service. Tubes which have been "aged" at normal operating conditions for this period of time can be used for replacement if it is necessary to avoid a change in tube characteristics during this short breakin period. The V508 position in the MX-2930B/USM Dual Trace Premaplifier is sensitive in this respect and aged tubes are recommended for replacement use in this position.
5-25	In Figure 5-10, change "C405" to "L405".
5-26	In Figure 5-11, add callout "R270" to resistor directly above C408.
5-27	In Figure 5-13, change SWEEP OUTPUT to "J104".
5-67	In Figure 5-41, change ground on R258 to "-100V".
5-71	In Figure 5-43, at connector marked MILLIVOLTS add "J301".
5-73	In Figure 5-44, change R437 to "2K".
5-80	In Figure 5-48, below J105 change "166" to "horizontal channel"; below J1 change "162" to "vertical channel".

TEMPORARY CORRECTION T-1 TO THE TECHNICAL MANUAL FOR OSCILLOSCOPE AN/USM-140B, AN/USM-141A, NAVSHIPS 95706.

The purpose of this temporary correction is to correct minor errors in the text of NAVSHIPS 95706 dated 24 March 1964. Insert this sheet in the manual immediately behind the front cover.

Make the following pen-and-ink corrections in the text of the manual.

PAGE NO.	ACTION
iii	After paragraph 2-4, add suffix "A" after "AN/USM-141"
v	After figure 2-0, change "Supply" to "Shipping"; after figure 2-3, add suffix "A" to "AN/USM-141".
4-4	In running foot, change "ORIGIANL" to "ORIGINAL".
4-7	In third paragraph, second line, delete "all"; in last paragraph, ninth line, delete "DC".
4-9	In step 6 RESULTS, add "C425" after "L506"; add line across chart between steps 7 and 8.
4-13	At test points A11 and A18 change arrow to point to "C"; in voltage chart, change A6-A9 voltage from "3" to "10".
4-17	In table 4-4, steps 14, 15, 16 add "Remove V301 and" before "Measure ..."
4-33	In figure 4-9 add test point "C19, +41 v, 40v p-p" at junction of C213 and C214.
5-39	On etched circuits, for XV206, interchange the tube pin numbers "1" and "9".
5-41	On etched circuits, change "R227" to "R277"; in 5-24 caption, change "Previews" to "Preamp".
5-46	In Parts Location Index, delete C413; add "R429, D5" and "R437, B5".
5-59	Change value of R88 to "47K".
5-63	Change "R105" to "R1012".
5-67	In diagram and index change "R227" to R277".
5-77	Change value of C1507 to 10; change value of R591 and R592 to 1200; change value of R570 to 3900; in the transistor connection diagram, interchange "E" and "C".
6-1	Add "Table 6-1" before "List of Tables".
6-2	In A202 P/N change "R" to "L".
6-3	After "A403, POWER CABLE:" Add "CX-4704/U 8' 0" ".
6-4	For CR416, change "CR403" to "CR103".
6-5	For C212, change "Fixed Air" to "Adjustable, ceramic: 0-1 pf, sleeve on resistor body."
6-6	For C413 delete description and add "Same as C1".
6-9	For Q406 delete "Same as Q401" and add "JAN type 2N1309"; For Q410 delete "JAN type 2N1309" and add "Same as Q406"; For Q411 change "Same as Q410" to "Same as Q406".
6-13	Delete "R227"; "R277 RESISTOR: Same as R1".
6-17	For W401 change "CX-4704/U" to C0-03LGF(3/18)0206".
6-24	For R591 change "RC20GF182K" to "RC20GF122K".

T.O. [illegible] NAVSHIPS [illegible] UNCLASSIFIED 30 March 1964

TEMPORARY CORRECTION T.O. [illegible] TO THE "TECHNICAL MANUAL FOR OSCILLOSCOPE AN/USM-140B, AN/USM-140A, NAVSHIPS [illegible].

The purpose of this temporary correction is to correct minor errors in the text of NAVSHIPS [illegible] dated 30 March 1964. Insert this sheet in the manual immediately behind the front cover.

Make the following pen-and-ink corrections in the text of the manual:

PAGE NO.	ACTION
iii	After paragraph 3-4, add entry "A" after "AN/USM-140".
v	After figure 3-6, change "Graph" to "Display"; after figure 3-5, add entry "A" to "AN/USM-140".
4-4	In heading text, change "OSCILLATOR" to "OSCILLATOR".
4-7	In third paragraph, second line, delete "at"; in last paragraph, sixth line, delete "(DC)".
4-8	In step 1 [illegible], add "C210" after "L208"; add line across chart, between steps 7 and 8.
4-12	At test points A11 and A12 change arrow to point to "C"; in voltage chart, change A11-A5 voltage from "0" to "10".
4-17	In table 4-4, steps 14, 15, 16 add "Remove V201 and" before "Measure ...".
4-22	In figure 4-9 add test point "C19, +6V p, 40V p-p" at junction of C213 and C211.
5-38	On model controls, for A7A209, interchange the tube pin numbers "1" and "9".
5-61	On model controls, change "M227" to "M277" in 5-24 caption, change "Reverse" to "Display".
5-62	In Parts Location table, delete C413, and "C413, C6-" and "C413, 6D".
5-63	Change value of R88 to "47K".
5-65	Change "R138" to "R101".
5-67	In diagram and table change "M127" to M277".
5-72	Change value of C1007 to 10; change value of [illegible] and 2888 to 1284; change value of [illegible] to 1000 in the transistor connection diagram, [illegible] "E" and "C".
6-1	Add "Table 6-1" before "Line of Tables".
6-2	In A8D2 D/A change "R" to "12".
6-3	After "A8D2, [illegible] CA8E2" add "CX-[illegible] 8" 0".
6-4	For C8A14, change "C8A6" to "C8128".
6-5	For C211, change "Trace Adv" to "Advance", centrold: 6-1 pd, change to resistor R-[illegible].
6-6	For CA12 relace dis-[illegible] read: "Relay to C1".
6-9	For CA08 delete "Relay to CA01" and add "CA01 type 2N1328". For CA10 delete "CA8 type [illegible]" and add "Diode as CA06". For CA11 change "Diode as CA1" to "Diode as CA08".
6-12	Delete "M227", "A8A7 RESISTOR: Same as R4".
6-17	For R401 change "CR-[illegible]" to CR-[illegible]/18M250".
6-24	For [illegible] change "MC1[illegible]" to "MC5001[illegible]".

TABLE OF CONTENTS

Paragraph		Page
	SECTION 1 - GENERAL DESCRIPTION	
1-1.	Scope	1-1
1-2.	General Description	1-1
1-3.	Description of Units	1-1
	a. Oscilloscope OS-121B/USM-140	1-1
	b. Oscilloscope Subassembly, Vertical Channel, Dual-Trace Preamplifier	1-1
	c. Oscilloscope Subassembly, Horizontal Channel, Auxiliary Plug-In Unit	1-1
1-4.	Reference Data	1-1
	a. Each Vertical Channel	1-1
	b. Differential Input	1-2
	c. Sweep and Synchronization	1-2
	d. Horizontal Amplifier	1-2
	e. Calibrator	1-2
	f. Cathode Ray Tube	1-2
	g. Power Requirements	1-2
	h. Dimensions	1-2
1-5.	Equipment Supplied	1-2
1-6.	Equipment and Publications Required But Not Supplied	1-2
1-7.	Auxiliary Accessory Equipment	1-6
1-8.	Equipment Similarities	1-7, 1-8
1-9.	Factory or Field Changes	1-7, 1-8
1-10.	Preparation for Reshipment	1-7, 1-8
	SECTION 2 - INSTALLATION	
2-1.	Unpacking and Handling	2-1
2-2.	Power Requirements	2-1
2-3.	Cabinet Model AN/USM-140B Installation	2-2
2-4.	Rack Model AN/USM-141 Installation	2-2
2-5.	Cables and Connectors	2-3
	a. Power Cable	2-3
	b. Test Prods	2-3
2-6.	The CRT Bezel, Graticule and Filter	2-4
2-7.	Initial Electrical Inspection	2-4
	SECTION 3 - OPERATION	
3-1.	Functional Operation	3-1
3-2.	Preparation for Use	3-1
3-3.	Description of Controls and Connectors	3-1
3-4.	Operating Precautions	3-1
3-5.	Operating Procedures	3-1
3-6.	Procedure for Turning On Oscilloscope; Compensating Test Prods and Making Initial Electrical Inspection	3-1
3-7.	Selecting and Synchronizing the Sweep and Its Magnification	3-1
3-8.	Horizontal Deflection by External Signals	3-5
3-9.	Dual Trace Operation	3-5
3-10.	Differential Operation	3-7
3-11.	Signal-Sweep Operation	3-7
3-12.	Operation with Intensity Modulation	3-8
3-13.	Operation with Direct Connection to CRT for Vertical Deflection	3-8
3-14.	Summary of Operating Procedures	3-8
3-15.	Turn-Off Procedure	3-8
3-16.	Operator's Maintenance	3-8
3-17.	Operating Checks and Adjustments	3-8
	a. Vertical Sensitivity Check	3-8
	b. Balance Check	3-9
	c. Horizontal Sensitivity Check	3-9
3-18.	Preventive Maintenance	3-9
3-19.	Emergency Maintenance	3-9
	a. Thermal Switch	3-9
	b. Fuse Replacement	3-9
	c. Emergency Replacement of Tubes and Semiconductors	3-9
	SECTION 4 - TROUBLE SHOOTING	
4-1.	Introduction	4-1
	a. Symptom Recognition	4-1
	b. Symptom Elaboration	4-1
	c. Determining Probable Faulty Section	4-1
	d. Locating the Faulty Function	4-1
	e. Localizing the Faulty Circuit	4-1
	f. Failure Analysis	4-1
	g. Test Equipment Required for Trouble Shooting	4-1
4-2.	Overall Oscilloscope	4-1
	a. Functional Description of Oscilloscope	4-1
	b. Low-Voltage Power Supplies	4-1
	c. High-Voltage Power Supplies	4-1
	d. Beam Finder Circuit	4-1
	e. Main Vertical Amplifier	4-1
	f. Horizontal Amplifier	4-1
	g. Sweep Generator	4-1
	h. MX-3078/USM Horizontal Plug-In	4-3

TABLE OF CONTENTS (Cont)

SECTION 4 - TROUBLE SHOOTING (Cont)

Paragraph		Page
	i. MX-2930B/USM Vertical Plug-In	4-3
	j. Calibration Circuit	4-3
4-3.	Overall Oscilloscope Trouble Shooting	4-3
	a. Test Equipment and Special Tools	4-3
	b. Trouble-Shooting Procedure	4-3
	c. Servicing Block Diagram	4-3
4-4.	Low-Voltage Power Supply	4-7
	a. Low-Voltage Power Supply Functional Description	4-7
	b. Low-Voltage Power Supply Trouble Shooting	4-7
4-5.	High-Voltage Power Supply	4-15
	a. High-Voltage Power Supply Functional Description	4-15
	b. High-Voltage Power Supply Trouble Shooting	4-15
4-6.	Beam Finder Circuit	4-15
	a. Beam Finder Circuit Functional Description	4-15
	b. Beam Finder Circuit Trouble Shooting	4-17
4-7.	Main Vertical Amplifier	4-21
	a. Main Vertical Amplifier Functional Description	4-21
	b. Main Vertical Amplifier Trouble Shooting	4-21
4-8.	Horizontal Amplifier	4-29
	a. Horizontal Amplifier Functional Description	4-29
	b. Horizontal Amplifier Trouble Shooting	4-29
4-9.	Sweep Generator	4-35
	a. Sweep Generator Functional Description	4-35
	(1) Synchronizing Circuit	4-35
	(2) Sweep Generator Circuit	4-35
	(3) Single Sweep Operation	4-35
	b. Sweep Generator Trouble Shooting	4-36
4-10.	Calibrator Circuit	4-41
	a. Calibrator Circuit Functional Description	4-41
	b. Calibrator Circuit Trouble Shooting	4-41
4-11.	MX-2930B/USM Vertical Plug-In Unit	4-42
	a. MX-2930B/USM Vertical Plug-In Functional Description	4-42
	(1) Input Attenuators	4-42
	(2) Amplifiers	4-42
	b. MX-2930B/USM Vertical Plug-In Trouble Shooting	4-42

SECTION 5 - MAINTENANCE

Paragraph		Page
5-1.	Failure, and Performance and Operational Reports	5-1
5-2.	Preventive Maintenance	5-1
	a. Servicing the Air Filter	5-1
	b. Fan Motor	5-1
5-3.	Reference Standards Procedures	5-1
5-4.	Adjustments	5-10
	a. Low-Voltage Power Supply Adjustment	5-10
	b. High-Voltage Power Supply Adjustment	5-10
	c. Geometry Adjustment	5-12
	d. Horizontal Amplifier Adjustment	5-12
	(1) Balance	5-12
	(2) Sensitivity	5-12
	(3) Frequency Compensation	5-12
	e. Sweep Generator Adjustment	5-14
	(1) Preset Sensitivity and Trigger Symmetry	5-14
	(2) Sweep Length and Sweep Rate	5-14
	f. Main Vertical Amplifier Adjustment	5-15
	(1) Low Frequency Gain	5-15
	(2) High Frequency Compensation and Pulse Response	5-15
	g. MX-2930B/USM Vertical Plug-In	5-15
	(1) Balance	5-15
	(2) Sensitivity	5-15
	(3) Input Capacitance	5-15
	(4) Attenuator Compensation	5-17
	(5) High Frequency Response	5-17
	(6) Switching Multivibrator Frequency	5-17
5-5.	Replacement of Components	5-17
	a. Tubes	5-17
	b. Transistors and Diodes	5-17
	c. Removal of Cathode Ray Tube	5-19
	d. Removal of High-Voltage Power Supply Tubes	5-19
	e. Access to Sweep Generator	5-19
	f. Component Replacement on Etched Circuit Boards	5-20
	g. Access to Fan and Power Supply Transistors	5-20
	h. Replacement of Horizontal Display Switch Assembly, A200	5-20
	i. Replacement of Sweep Time Switch Assembly, A1000	5-22

Section 6 - Preventive Maintenance Checks and Services

Paragraph		Page
6-1.	Scope of Maintenance	6-1
6-2.	Preventive Maintenance	6-1
6-3.	Preventive Maintenance Checks and Services Periods	6-1
6-4.	Daily Preventive Maintenance Checks and Services Chart	6-3
6-5.	Weekly Preventive Maintenance Checks and Services Chart	6-4
6-6.	Monthly Preventive Maintenance Checks and Services Chart	6-4
6-7.	Quarterly Preventive Maintenance Checks and Services Chart	6-5
6-8.	Cleaning	6-7
6-9.	Touchup Painting Instructions	6-7
Appendix I References		A1-1
Appendix II Basic Issue Items List		
Appendix III Maintenance Allocation Chart		

LIST OF ILLUSTRATIONS

Figure — Page

SECTION 1 - GENERAL DESCRIPTION

1-1. Oscilloscope AN/USM-140B 1-0

SECTION 2 - INSTALLATION

2-0. Exploded View of Supply Package for AN/USM-140B Oscilloscope . . 2-0
2-1. Power Connections for Operating the Oscilloscope on 230-volt Power Line 2-1
2-2. AN/USM-140B Dimensions 2-2
2-3. AN/USM-141 Dimensions 2-3

SECTION 3 - OPERATION

3-1. Oscilloscope Front-Panel Controls and Connectors 3-2
3-2. Procedure for Turning On Oscilloscope,Compensating Probe, and Making Initial Electrical Inspection 3-4
3-3. Selecting and Synchronizing the Sweep and Sweep Magnifications . 3-6

SECTION 4 - TROUBLE SHOOTING

4-1. Overall Functional Block Diagram . 4-2
4-2. Overall Servicing Block Diagram . . 4-6
4-3. Low-Voltage Power Supply Functional and Servicing Block Diagram 4-13, 4-14
4-4. High-Voltage Power Supply Functional and Servicing Block Diagram 4-19, 4-20
4-5. Simplified Schematic Diagram of the Beam Finder Circuit 4-18
4-6. Cascode Amplifier/Simplified Schematic Diagram and Cross-Coupled Cathode Follower 4-22
4-7. Constant Current Generator Simplified Schematic Diagram . . 4-23
4-8. Main Vertical Amplifier Functional and Servicing Block Diagram 4-27, 4-28

Figure — Page

SECTION 4 - TROUBLE SHOOTING (Cont)

4-9. Horizontal Amplifier Functional and Servicing Block Diagram 4-33, 4-34
4-10. Schmitt Trigger Simplified Circuit with Waveforms 4-36
4-11. Sweep Generator Functional and Servicing Block Diagram 4-39, 4-40
4-12. Construction of Vertical Plug-In Extender 162A-39A . . . 4-44
4-13. Vertical Plug-In Functional and Servicing Block Diagram 4-45, 4-46
4-14. Bottom View, Location of Test Points on Low-Voltage Power Supply 4-47
4-15. Top View, Location of Test Points on High-Voltage Power Supply 4-48
4-16. Bottom View, Location of Test Points on Horizontal Pre-amplifier Assembly 4-49
4-17. Top View, Location of Test Points on Main Horizontal Amplifier and Divider Assembly 4-50
4-18. Bottom View, Location of Test Points on Sweep Generator Assembly 4-51
4-19. Top View, Location of Test Points on Main Vertical Amplifier Assembly 4-52
4-20. Fan Shroud and Power Transistor Assembly, Location of Test Points and Connections 4-53
4-21. Left Side View of MX-2930B/USM Vertical Plug-In Assembly, Location of Test Points 4-54
4-22. Right Side View of MX-2930B/USM, Location of Test Points 4-54

LIST OF ILLUSTRATIONS (Cont)

Figure		Page
	SECTION 5 - MAINTENANCE	
5-1.	Main Vertical Amplifier Test Connector	5-2
5-2.	Location of Low-Voltage Power Supply Adjustments	5-10
5-3.	Top View, Location of Adjustments	5-11
5-4.	Bottom View, Location of Adjustments	5-13
5-5.	Location of Adjustments in MX-2930B/USM	5-16
5-6.	Top and Bottom Views, Location of Electron Tubes	5-18
5-7.	Removal of Cathode-Ray Tube	5-19
5-8.	Wiring Between Switch S202 and Etched Circuit Board A201	5-20
5-9.	Top View, Location of Parts	5-24
5-10.	Bottom View, Location of Parts	5-25
5-11.	Right-Side View, Location of Parts	5-26
5-12.	Left-Side View, Location of Parts	5-27
5-13.	Front-View, Location of Parts	5-27
5-14.	Main Vertical Input Amplifier and Internal Sync Source Etched Circuit Assembly, Location of Parts	5-29
5-15.	Main Vertical Amplifier and Driver Etched Circuit Assembly	5-31
5-16.	Scanner Output Etched Citcuit Assembly, Location of Parts	5-32
5-17.	Sweep Generator Etched Circuit Assembly, Location of Parts	5-33
5-18.	Sweep Time Switch Assembly, Location of Parts	5-34
5-19.	Sweep Mode/Trigger Source Switch Assembly, Location of Parts	5-34
5-20.	Trigger Level/Trigger Slope Switch Assembly, Location of Parts	5-34
5-21.	Ext. Vernier/Horizontal Display Switch Assembly, Location of Parts	5-35, 5-36
5-22.	Horizontal Sensitivity Adjustment Etched Circuit Assembly, Location of Parts	5-37
5-23.	Main Horizontal Amplifier and Driver Etched Citcuit Assembly, Location of Parts	5-39, 5-40
5-24	Horizontal Impedance Matching Preamp Etched Circuit Assembly, Location of Parts	5-41

Figure		Page
	SECTION 5 - MAINTENANCE (Cont)	
5-25.	Calibrator Switch Assembly, Location of Parts	5-41
5-26.	High-Voltage Power Supply Etched Circuit Assembly, Location of Parts	5-43
5-27.	High Voltage Distribution Etched Circuit Assembly, Location of Parts	5-45
5-28.	Low Voltage Rectifier Etched Circuit Assembly, Location of Parts	5-46
5-29.	Low Voltage Regulator Amplifier Etched Circuit Assembly, Location of Parts	5-47, 5-48
5-30.	MX-2930B/USM, Location of Parts	5-49
5-31.	MX-2930B/USM Dual Channel Vertical Amplifier Etched Assembly, Location of Parts	5-51
5-32.	MX-2930B/USM Vertical Switching Etched Circuit Assembly, Location of Parts	5-53
5-33.	MX-2930B/USM Vernier/ Sensitivity Switch Assembly, Location of Parts	5-54
5-34.	MX-2930B/USM Vertical Presentation Switch Assembly, Location of Parts	5-55
5-35.	MX-2817/U Test Prod, Location of Replaceable Parts	5-56
5-36.	MX-3078/USM Horizontal Auxiliary Plug-In Unit, Location of Parts	5-57
5-37.	Main Vertical Amplifier Schematic Diagram	5-59, 5-60
5-38.	Sweep Generator Schematic Diagram	5-61, 6-62
5-39.	Sweep-Time Switch, Functional Schematic Diagram	5-63, 5-64
5-40.	Sweep-Time Switch, Wiring Diagram	5-65, 5-66
5-41.	Horizontal Amplifier Schematic Diagram	5-67, 5-68
5-42.	Horizontal Display Switch Schematic Diagram	5-69, 5-70
5-43.	High-Voltage Power Supply and Calibrator Schematic Diagram	5-71, 5-72
5-44.	Low-Voltage Power Supply Schematic Diagram	5-73, 5-74
5-45.	Electron Tube Heater Circuit, Functional Diagram	5-57, 5-76
5-46.	MX-2930B/USM Dual-Trace Preamplifier Schematic Diagram	5-77, 5-78

LIST OF ILLUSTRATIONS (Cont)

Figure		Page
	SECTION 5 - MAINTENANCE (Cont)	
5-47.	MX-3078/USM Horizontal Channel Auxiliary Plug-In Unit Schematic Diagram	5-79
5-48.	Connections to the Horizontal and Vertical Plug-In Connectors J105 and J1	5-80

LIST OF TABLES

Table		Page
	SECTION 1 - GENERAL DESCRIPTION	
1-1.	Equipment Supplied with Oscilloscope AN/USM-140B	1-3
1-2.	Equipment and Publications Required but not Supplied	1-4
1-3.	Accessories for Oscilloscope AN/USM-140B	1-7, 1-8
	SECTION 3 - OPERATION	
3-1.	Description of Front-Panel Controls and Connectors	3-2
3-2.	Procedure for Turning On Oscilloscope and Preparing it for Use	3-4
3-3.	Selecting and Synchronizing the Sweep and Sweep Magnification	3-6
3-4.	Adjustments Required Following Tube and Semiconductor Replacement	3-10
	SECTION 4 - TROUBLE SHOOTING	
4-1.	Test Equipment Required for Trouble Shooting	4-3
4-2.	Overall Oscilloscope Trouble Shooting	4-4
4-3.	Low-Voltage Power Supply Trouble Shooting	4-8
4-4.	High-Voltage Power Supply Trouble Shooting	4-16
4-5.	Main Vertical Amplifier Trouble Shooting	4-23
4-6.	Horizontal Amplifier Trouble Shooting	4-30
4-7.	Sweep Generator Trouble Shooting	4-37
4-8.	Calibrator Circuit Trouble Shooting	4-41
	SECTION 5 - MAINTENANCE	
5-1.	Reference Standards Procedures	5-2
5-2.	Test Equipment for Reference Standards Procedures	5-2
5-3.	Power Supply Reference Standards Procedures	5-3
5-4.	Calibrator Reference Standards Procedures	5-4
5-5.	Horizontal Amplifier Reference Standards Procedures	5-5
5-6.	Sweep Generator Reference Standards Procedures	5-6
5-7.	Main Vertical Amplifier Reference Standards Procedures	5-7
5-8.	MX-2930B/USM Vertical Plug-In Reference Standards Procedures	5-7 5-8
5-9.	Test Equipment for Adjustment Procedures Reference Standards Procedures	5-10
5-10.	Sweep Calibration Reference Standards Procedures	5-14
	SECTION 6 - PARTS LIST	
6-1.	List of Units	6-1
6-2.	Maintenance Parts List	6-2
6-3.	List of Manufacturers	6-27

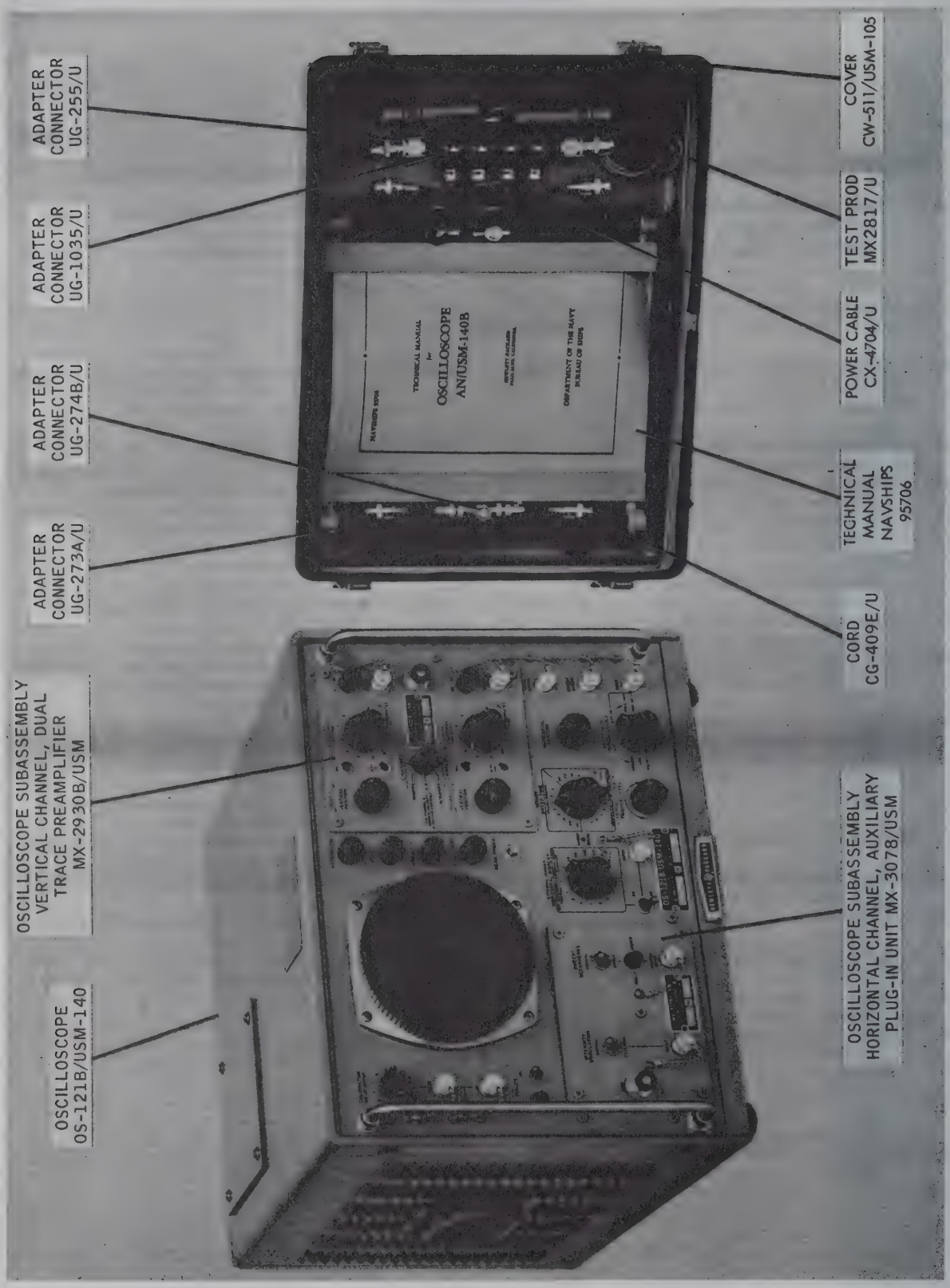
ADAPTER CONNECTOR UG-255/U
ADAPTER CONNECTOR UG-1035/U
ADAPTER CONNECTOR UG-274B/U
ADAPTER CONNECTOR UG-273A/U
OSCILLOSCOPE SUBASSEMBLY VERTICAL CHANNEL, DUAL TRACE PREAMPLIFIER MX-2930B/USM
OSCILLOSCOPE OS-121B/USM-140
COVER CW-511/USM-105
TEST PROD MX2817/U
POWER CABLE CX-4704/U
TECHNICAL MANUAL NAVSHIPS 95706
CORD CG-409E/U
OSCILLOSCOPE SUBASSEMBLY HORIZONTAL CHANNEL, AUXILIARY PLUG-IN UNIT MX-3078/USM
TECHNICAL MANUAL for OSCILLOSCOPE AN/USM-140B
DEPARTMENT OF THE NAVY BUREAU OF SHIPS

Figure 1-1. Oscilloscope AN/USM-140B

SECTION A
INTRODUCTION

A–1. Index of Equipment Publications

Refer to DA Pam 310–4 to determine whether there are new editions, changes, or additional publications pertaining to the equipment. DA Pam 310–4 is an index of current technical manuals, technical bulletins, supply manuals (types 7, 8, and 9), supply bulletins, and lubrication orders available through publications supply channels. The index lists the individual parts (–10, –20, –35P, etc.) and the latest changes to and revisions of each equipment publication.

A–2. Forms and Records

a. Reports of Maintenance and Unsatisfactory Equipment. Use equipment forms and records in accordance with instructions given in TM 38–750.

b. Report of Packaging and Handling Deficiencies. Fill out and forward DD Form 6 (Report of Packaging and Handling Deficiencies) as prescribed in AR 700–58.

c. Reporting of Equipment Manual Improvements. Report of errors, omissions, and recommendations for improving this manual by the individual user is encouraged. Reports should be submitted on DA Form 2028 (Recommended Changes to DA Publications) and forwarded direct to Commanding General, U.S. Army Electronics Command, ATTN: AMSEL–MR–NMP–AD, Fort Monmouth, N.J., 07703.

SECTION I

GENERAL DESCRIPTION

1-1. SCOPE.

NAVSHIPS 95706 is a single-volume technical manual that includes operating and servicing instructions and a list of replaceable parts prepared in accordance with MIL-M-15071 E(SHIPS) for Oscilloscopes AN/USM-140B, AN/USM-140C, AN/USM-141A, and AN/USM-141B. The electrical specifications, operating and servicing instructions, schematic diagrams and parts list are identical for all models with noted exceptions. The AN/USM-140B and AN/USM-140C are portable models for bench-top use; the AN/USM-141A and AN/USM-141B are designed for permanent installation in a standard 19-inch wide rack. No other publications are required or supplied for these oscilloscopes at the date of this publication. Subsequent references to the Oscilloscopes in this manual will list only the cabinet model AN/USM-140B except to indicate minor differences in details.

1-2. GENERAL DESCRIPTION.

The AN/USM-140B is a precision high-speed oscilloscope for displaying the waveforms of electrical voltages at frequencies ranging from direct current to 22 megacycles (equivalent to a risetime of 16 nanoseconds). Vertical deflection sensitivity is continuously adjustable from 200 volts to 20 millivolts per centimeter; horizontal deflection sensitivity is continuously adjustable from 100 volts to 0.1 volt per centimeter at frequencies from direct current to 1 megacycle per second. Sweep rates are continuously adjustable from 15 seconds to 0.1 microsecond per centimeter. The sweep can be synchronized with an external signal or with the signal being viewed. Polarity and sensitivity of the synchronization are selectable to permit synchronization from different voltage points on complex waveforms.

The AN/USM-140B is especially developed for general-purpose use in US Navy ship and shore electronic maintenance and research facilities. It is designed for versatility, and reliability under a wide range of environmental conditions, combined with wide frequency range, accurate calibration, and stable synchronization at high sweep rates. Sweep rate, sweep expansion and sensitivity controls are direct-reading. Each calibrated step-type control is equipped with a potentiometer to give continuous adjustment between steps. Special features include: a beam-finder pushbutton to simplify the problem of finding and centering off-screen traces; a front-panel calibrator that provides squarewave voltages from 0.2 millivolt to 100 volts for checking the accuracy of the vertical and horizontal sensitivity selectors; an internal 200-nanosecond vertical signal delay to permit viewing the leading edge of the signal that triggers the sweep; sweep and gating output signals for use in external equipment.

Typical uses for the oscilloscope include precise waveform analysis and oscillography used in the research, design and service of electronic circuits, waveform observations required for adjusting operating equipment such as radio transmitters, and precise measurements of time and frequency.

1-3. DESCRIPTION OF UNITS.

The AN/USM-140B consists of a major oscilloscope unit, two plug-in units which install in recesses in the front panel of the major unit, and a group of accessory cables and connectors stored in the detachable front cover.

a. OSCILLOSCOPE OS-121B/USM-140. - The major unit, Oscilloscope OS-121B/USM-140, contains the power supplies, horizontal amplifier, sweep generator, main vertical amplifier, cathode ray tube, calibrator and the controls associated with these circuits.

b. OSCILLOSCOPE SUBASSEMBLY, VERTICAL CHANNEL, DUAL TRACE PREAMPLIFIER. - This plug-in unit, MX-2930B/USM, permits simultaneous observation of two separate vertical input signals, each signal being controlled and positioned independently. This unit provides three methods of observing the two input signals, 1) each input signal on alternate sweeps, 2) each input signal on alternate 1-microsecond segments of the two input waveforms, 3) the difference voltage of the two input signals combined. Either channel can be also selected for single-channel operation.

c. OSCILLOSCOPE SUBASSEMBLY, HORIZONTAL CHANNEL, AUXILIARY PLUG-IN UNIT. - This plug-in unit, MX-3078/USM, is required for normal repetitive sweeps and provides for single-sweep operation with either manual or external arming of the sweep, and also permits intensity modulation of the trace by external signals.

1-4. REFERENCE DATA.

The AN/USM-140B is designed for continuous usage in ambient temperatures from -28°C to +50°C with relative humidity up to 99%. Within this range, the equipment will operate with the performance and accuracy specified below.

a. EACH VERTICAL CHANNEL. -

(1) Sensitivity Range (both AC and DC coupling): Ten calibrated ranges in 1-2-5-10 sequence from 0.02 volt/cm to 20 volts/cm; accuracy ±5%. Vernier control extends sensitivity to 50 volts/cm.

(2) Frequency Pass Band:

DC coupled: dc to 22 mc (down 3 db points at 22 mc), 0.016 μsec rise time;

AC coupled: 2 cps to 22 mc between 3 db points (0.016 μsec rise time).

(3) Input Impedance: 1 megohm ±10% shunted by 30 pf on all ranges. 10 megohms shunted by 10 pf when using Test Prod MX-2817/U.

(4) Display Polarity: Selectable, + up or - up.

(5) Electronic Switching: Dual channel display by alternate sweep, or chopped at approximately 1 mc with trace blanking during switching.

b. DIFFERENTIAL INPUT.—

(1) Both input attenuators may be switched to one channel to give differential input. The input attenuators may be set separately to equalize input signals of different levels.

(2) Common Mode Rejection: At least 40 db at maximum sensitivity; at least 30 db when using attenuators.

c. SWEEP AND SYNCHRONIZATION.—

(1) Internal Sweep: 24 calibrated ranges in 1-2-5-10 sequence from 0.1 μsec/cm to 5 sec/cm, accuracy ±3%. Vernier control extends slowest sweep to 15 sec/cm.

(2) Sweep Expansion: 7 calibrated ranges, in 1-2-5-10 sequence up to X100. Increases fastest sweep speed to 0.02 μsec/cm. Accuracy: X1, X2, and X5 ranges ±3%; X10 and X20: ±5%; X50 and X100: ±10% to 0.02 μsec/cm.

(3) Trigger Modes:

From external signals 0.5 volt peak-to-peak or greater;

from internal signals having 0.5 cm vertical deflection or greater;

from internal source of line frequency.

(4) Trigger Level and Slope: Uses positive or negative-going voltage, with trigger point continuously adjustable from -30 to +30 volts on external signals or any visible point on the waveform of internal signals.

(5) External Trigger Input Impedance: 1 megohm ±10% shunted by 70 pf.

(6) Sweep Output: -50 to +50 volts (approx).

(7) Gate Output: +50 volts (approx); length equal to duration of sweep.

d. HORIZONTAL AMPLIFIER.—

(1) Bandwidth:

DC coupled: dc to 1 mc (down 3 db at 1 mc);

AC coupled: 2 cps to 1 mc between 3 db points.

(2) Sensitivity: 7 calibrated ranges, in 1-2-5-10 sequence from 0.1 volt/cm to 10 volts/cm. Vernier control extends sensitivity to 25 volts/cm.

(3) Input Impedance: 1 megohm ±10% shunted by 30 pf.

e. CALIBRATOR.—

(1) Voltage: 9 calibrated ranges in 1-2-5-10 sequence, from 0.2 millivolts to 100 volts peak-to-peak; accurate to within ±3%.

(2) Waveform: 1000-cycle square wave, 1-μsec rise and decay time.

(3) Current: 5 milliamperes peak-to-peak, ±3%.

(4) Loading: 1 megohm or greater.

f. CATHODE RAY TUBE.— P2 phosphor with compatible green filter. (P31 phosphor may also be used).

(1) Graticule: 10 cm long by 4 cm high graduated in centimeter squares with 2 mm subdivisions on horizontal and vertical axes. Adjustable, edge lighting.

(2) Deflection Plate Connection: Pin type terminals.

(3) Deflection Sensitivity:

Vertical: approximately 20 volts/cm.

Horizontal: approximately 35 volts/cm.

(4) Intensity Modulation: + 20 volt pulse blanks CRT trace of normal intensity.

g. POWER REQUIREMENTS: 115 vac, ±10%; 50~±10%, 60~±10%, and 400~±10%; single phase, approximately 480 watts.

h. DIMENSIONS: See figures 2-2 and 2-3.

1-5. EQUIPMENT SUPPLIED.

The equipment supplied under AN/USM-140B is listed in table 1-1. In addition to the basic oscilloscope and its two plug-in units, two test prods, two coaxial cables and an assortment of connector adapters are provided to facilitate connecting the oscilloscope to a variety of equipments and circuits. Test Prods MX-2817/U (MX-4037/U may also be used) are specially designed broad-band probes equipped with alligator jaws for easy attachment to most forms of electrical conductors. Each test prod contains a compensated voltage divider that gives a 10-times increase in the input resistance of the oscilloscope channel with which it is used (vertical or horizontal input), with a reduced input capacity of 10 picofarads; use of the prod attenuates the input signal and reduces the height of the displayed waveform by a factor of 10.

Two BNC "TEE" adaptors are provided to facilitate connecting the same input signal to two different input connectors. Four BNC-to-Binding Post adapters are supplied to permit connecting plain wire leads to the type BNC connectors on the oscilloscope. Two UHF-to-BNC adapters are supplied to permit connection to equipments using UHF connectors. Two eight-foot coaxial cables terminated in BNC connectors are provided for connection to external equipments.

1-6. EQUIPMENT AND PUBLICATIONS REQUIRED BUT NOT SUPPLIED.

A list of all equipments and publications required but not supplied is provided in table 1-2.

TABLE 1-1. EQUIPMENT SUPPLIED WITH OSCILLOSCOPE AN/USM-140B AND AN/USM-141A

QTY PER EQUIP	NOMENCLATURE		UNIT NO.	OVERALL DIMENSIONS (IN.)			VOLUME (CU.IN.)	WEIGHT (LB)
	NAME	DESIGNATION		HEIGHT	WIDTH	DEPTH		
1	*Oscilloscope Assembly	AN/USM-140B		14-3/4	19-3/4	24	6700	103.5††
1	*Oscilloscope	OS-121B/USM-140	1	12-1/4	18	22-7/8	5100	84.5
1	Dual Trace Preamplifier	MX-2930B/USM	2	7	6	11-1/4	470	7
1	Auxiliary Plug-In	MX-3078/USM	3	4-5/8	6	10-7/8	285	2
2	Prod, test	MX-2817/U or MX-4037/U	4					
2	Connector, adapter	UG-255/U						
2	Connector, adapter	UG-273A/U						
4	Connector, adapter	UG-1035/U or UG-1441/U						
1	Cable Assembly, Power, Electrical	CX-4704/U (8 ft. 0 inch)						
2	Cord	CG-409E/U (8 ft.0 inch)						
2	Connector, adapter	UG-274B/U						
2	Technical Manual	NAVSHIPS 95706						3.4
1	*Cover	CW-511/USM-150		14	19-1/2	3		4.5
1	**Oscilloscope Assembly	AN/USM-141A		12-7/32	19	24-3/16		92.5††
1	**Oscilloscope	OS-122A/USM-141	1†	12-7/32	19	24-3/16		78

*Not included in AN/USM-141A
**Not included in AN/USM-140B
Internal parts of AN/USM-141A are identical to AN/USM-140B
Shipping weight: 136 lbs

TABLE 1-1A. EQUIPMENT SUPPLIED WITH OSCILLOSCOPE AN/USM-140C AND AN/USM-141B

QTY PER EQUIP	NOMENCLATURE		UNIT NO.	OVERALL DIMENSIONS (IN.)			VOLUME (CU.IN.)	WEIGHT (LB)
	NAME	DESIGNATION		HEIGHT	WIDTH	DEPTH		
1	*Oscilloscope Assembly	AN/USM-140C		14-3/4	19-3/4	24	6700	103.5††
1	*Oscilloscope	OS-121C/USM-140	1	12-1/4	18	22-7/8	5100	84.5
1	Dual Trace Preamplifier	MX-2930C/USM	2	7	6	11-1/4	470	7
1	Auxiliary Plug-In	MX-3078B/USM	3	4-5/8	6	10-7/8	285	2
2	Prod, test	MX-2817/U or MX-4037/U	4					
2	Connector, adapter	UG-255/U						
2	Connector, adapter	UG-273A/U						
4	Connector, adapter	UG-1035/U or UG-1441/U						
1	Cable Assembly, Power Electrical	CX-4704/U (8 ft. 0 inch)						
2	Cord	CG-409E/U (8 ft. 0 inch)						
2	Connector, adapter	UG-274B/U						
2	Technical Manual	NAVSHIPS 95706	(with change 1 Navships 0967-133-7010)					4.4
1	*Cover	CW-511/USM-105		14	19-1/2	3		4.5
1	**Oscilloscope Assembly	AN/USM-141B		12-7/32	19	24-3/16		92.5††
1	**Oscilloscope	OS-122B/USM-141	1†	12-7/32	19	24-3/16		78

*Not included in AN/USM-141B
**Not included in AN/USM-140C
†Internal parts of AN/USM-141B are identical to AN/USM-140C
††Shipping weight: 136 lbs

TABLE 1-2. EQUIPMENT AND PUBLICATIONS REQUIRED BUT NOT SUPPLIED

QTY PER EQUIP	NOMENCLATURE		REQUIRED USE	REQUIRED CHARACTERISTICS
	NAME	* DESIGNATION		
1	DC Voltmeter	CCUH-825-A-G (AN/USM-98 or Fluke Model 801 or 803)	Precision measurement of low voltage power supply and other dc voltages	Voltage Range: 0 to 400 volts Input Impedance: 1 megohm minimum Accuracy: 0.05%
1	High Voltage DC Voltmeter	AN/USM-116 (Hewlett-Packard Model 410B)	Voltage and resistance measurements, high-voltage measurements	Voltage Range: to 5000 volts Input Impedance: 500 megohms min. Accuracy: 8%
1	Constant Amplitude Generator	No preferred type Tektronix 190A	Passband measurement	Frequency Range: 50 kc to 30 mc Output: 1 volt Accuracy: 2%
1	Voltmeter Calibrator	No preferred type Hewlett-Packard Model 738A	Calibrated signal source, dc and 400 cps ac	Voltage Range: 1 to 100 volts p-p Accuracy: 1%
1	Square Wave Generator	No preferred type Tektronix 107	High frequency compensation setting	Rise Time: 3 nsec max. Output: 0.5 volt min.
1	Square Wave Generator	TS-583-B (TS-583/U or Hewlett-Packard Model 211A)	Attenuator compensation setting over a wide frequency range	Rise Time: 0.1 μsec max. Output: up to 25 volts Frequency Range: 1 to 100 kc
1	Time-Mark Generator	AN/USM-108 (Tektronix Model 180A)	Sweep time calibration	Range: 100 msec to 0.1 μsec
1	Oscilloscope	AN/USM-140( ) (Hewlett-Packard Model E03-170B)	Waveform comparison	Calibration: Vertical & horizontal Input Impedance: 10 megohm/10 pf
1	High-Gain Differential Amplifier (Oscilloscope Plug-In)	AM-3567/USM	Measuring low-level ac and ripple waveforms	Sensitivity: 1 mv/cm from dc to 300 kc Sensitivity: 50 mv/cm from dc to above 2.0 mc

* First entry, preferred test instrument; second entry, commercial or military alternate.

TABLE 1-2. (Continued)

QTY PER EQUIP	NOMENCLATURE		REQUIRED USE	REQUIRED CHARACTERISTICS
	NAME	* DESIGNATION		
1	Tube Tester	AN/USM-118( )	Testing tubes for dynamic and static characteristics	-
1	Q Meter	AN/URM-90	Capacitance measurement	Calibration: ±0.3 pf to 50 pf
1	Electronic AC Voltmeter	ME-6E/U (ME-6/U or Hewlett-Packard Model 400 series)	AC voltage measurements	Range: 1 mv full scale to 300 volts full scale
1	Transistor Tester	TS-1100 ( )/U	Testing transistors	-
1	Main Vertical Amplifier Test Connector	Construct as shown in figure 5-1	To facilitate direct signal connection to main vertical amplifier	-
1	Special Vertical Extender	Construct as shown in figure 4-12	To facilitate operation of vertical plug-in unit outside of oscilloscope	-
1	52-Ohm Feed-Through 5:1 Attenuator	Tektronix 011-0060-00	Attenuation for Tektronix Instruments	-
1	52-Ohm Feed-Through Termination for Tektronix Instruments	Tektronix 011-001 or 011-0049-00	Proper-Impedance Termination for Tektronix Instruments	-
1	Instruction Book for DC Voltmeter	Fluke commercial manual for Model 801, 803 or 825A		
1	Instruction Book for High Voltage DC Voltmeter AN/USM-116	NAVSHIPS 93808		
1	Instruction Book for Constant Amplitude Generator, Tektronix Model 190A	Tektronix commercial manual for Model 190A		
1	Instruction Book for Voltmeter Calibrator, Hewlett-Packard Model 738A	T.O. 33A1-12-265-1 (Hewlett-Packard commercial manual for Model 738A)		
1	Instruction Book for Square Wave Generator, Tektronix Model 107	T.O. 33A1-8-157-1 (Tektronix commercial Manual for Model 107)		
1	Instruction Book for Square Wave Generator TS-583-B or TS-583/U	TM 11-5024 (Hewlett-Packard commercial Manual for Model 211A)		

*First entry, preferred test instrument; second entry, commercial or military alternate.

TABLE 1-2. (Continued)

QTY PER EQUIP	NOMENCLATURE		REQUIRED USE	REQUIRED CHARACTERISTICS
	NAME	DESIGNATION		
1	Instruction Book for Time Mark Generator AN/USM-108	Tektronix commercial manual for Model 180A		
1	Instruction Book for High-Gain Differential Amplifier (Oscilloscope Plug-In) AM-3567/USM	NAVSHIPS 95680		
1	Instruction Book for Q Meter AN/URM-90	TM 11-2646A		
1	Instruction Book for Tube Tester AN/USM-118( )	NAVSHIPS 93883		
1	Instruction Book for Electronic AC Voltmeter ME-6E/U	NAVSHIPS 95564		
1	Instruction Book for Transistor Tester TS-1100( )/U	NAVSHIPS 95693		

1-7. AUXILIARY ACCESSORY EQUIPMENT.

A list of three accessory plug-in units which may be used with the AN/USM-140B is provided in table 1-3. These units are not supplied with the AN/USM-140B, but may be procured separately to increase the oscilloscope's versatility. One unit, Time Delay Generator MX-2962/USM, can be used in place of the MX-3078/USM to provide an accurately calibrated, adjustable time delay between the time of an externally generated sweep trigger and the start of the oscilloscope sweep. Refer to NAVSHIPS 94309 for instructions. The second is High-Gain Differential Amplifier, AM-3567/USM, which can be used in place of the MX-2930B/USM to permit display of the differential signals between two channels. The third is High-Gain Wide-Band Amplifier, AM-3568/USM, which can be used in place of the MX-2930B/USM to view low-level wide-band signals requiring high-gain.

TABLE 1-3. ACCESSORIES FOR OSCILLOSCOPE AN/USM-140B

MODEL	NAME	FUNCTION
AM-3567/USM	High-Gain Differential Amplifier	Used in place of Dual-Trace Preamplifier MX-2930B/USM for greater input sensitivity. Provides 1-millivolt sensitivity from dc to 300 kc 50-millivolt sensitivity from dc to 12 mc
AM-3568/USM	High-Gain Wide-Band Amplifier	Used in place of Dual-Trace Preamplifier MX-2930B/USM for viewing fast-rise signals. Provides single-channel, 30-mc passband with 0.05-volt/cm to 50-volt/cm sensitivity.
MX-2962/USM	Time Delay Generator	Used in place of Horizontal Channel Auxiliary Plug-in Unit MX-3078/USM to allow expansion of a portion of the waveform. Provides accurately calibrated, adjustable sweep delay from 10 sec to 1 usec.

1-8. EQUIPMENT SIMILARITIES.

This manual covers both the AN/USM-140B and AN/USM-141 oscilloscopes. The AN/USM-141 is a rack-mount version of the AN/USM-140B, and the the two are electrically identical, as described in paragraph 1-1.

1-9. FACTORY OR FIELD CHANGES.

Oscilloscope AN/USM-140B (and Oscilloscope AN/USM-141) are new instruments; no factory or field changes have been made as of date of issue.

1-10. PREPARATION FOR RESHIPMENT.

Electronic equipment must be packed with special care. The package in which the equipment is originally shipped is designed to give the instrument full protection from adverse environments and from the shock and vibration incurred in shipment. It should be preserved and utilized for reshipment wherever possible. When preparing the AN/USM-140B for shipment, stow the accessory probes, cables, and connectors in their holders inside the cover of the instrument, and lock the cover in place. If the factory-designed package is not in satisfactory condition, pack in accordance with MIL-P-116 and MIL-E-17555E.

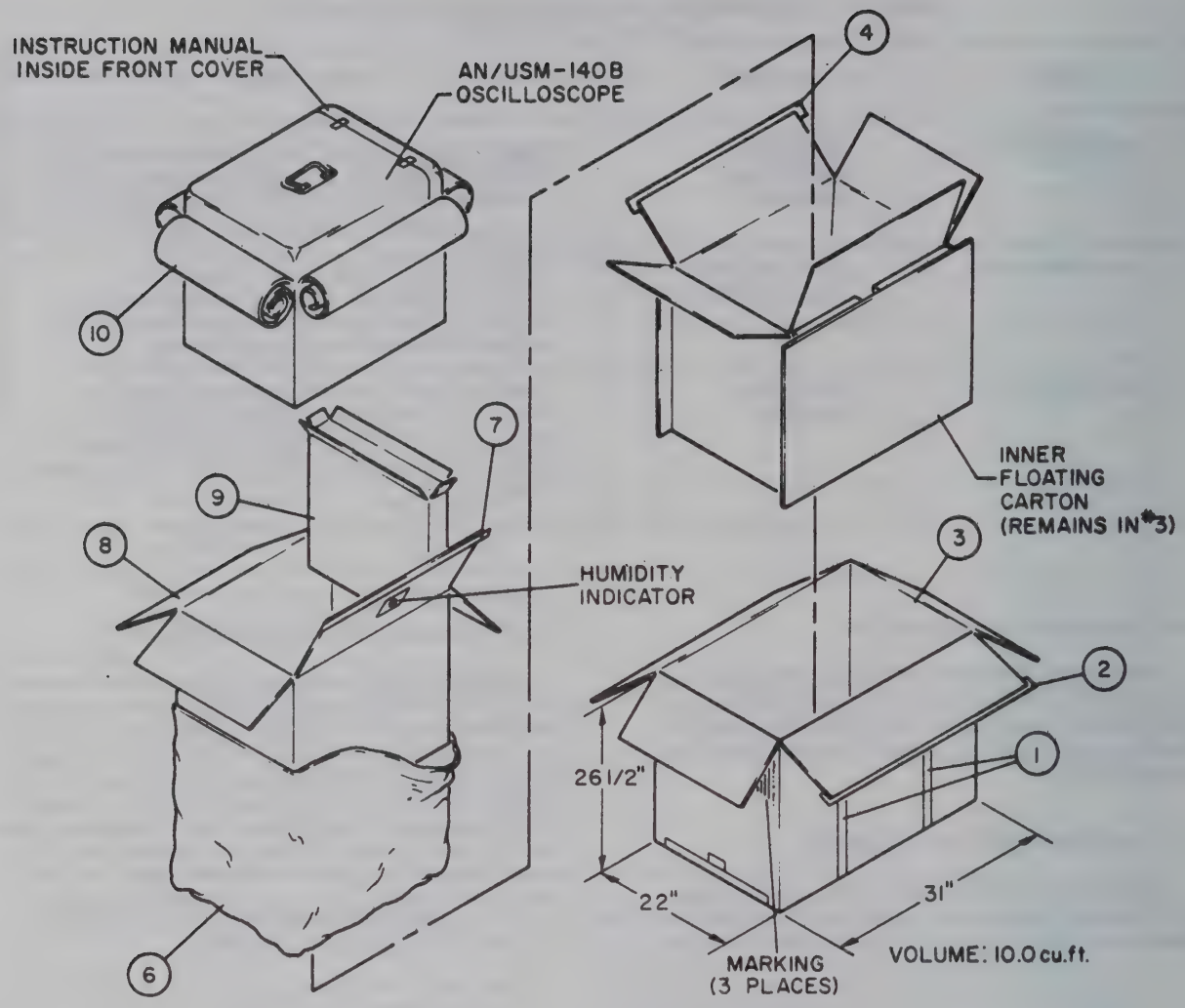

UNPACKING INSTRUCTIONS

OPEN PACKAGE IN ORDER OF LISTING

ITEM	ACTION	MATERIAL
1	CUT	STEEL STRAPPING
2	REMOVE	TAPE – 3", GUMMED, FILAMENT
3	OPEN	CORRUGATED CARTON
4	REMOVE	TAPE – 3", GUMMED, FILAMENT
5	OPEN	INNER FLOATING CARTON
6	OPEN	BARRIER BAG (MOISTURE PROOF)
7	REMOVE	TAPE – 3", GUMMED, FILAMENT
8	OPEN	CORRUGATED CARTON
9	REMOVE	CORRUGATED DESICCANT COVER
10	OPEN	WRAPPER (PAPER)

Figure 2-0. Exploded View of Shipping Package for AN/USM-140B Oscilloscope

SECTION 2

INSTALLATION

2-1. UNPACKING AND HANDLING.

The oscilloscope is shipped with all electron tubes installed, including the cathode ray tube. Handle the instrument carefully when removing it from the shipping container.

Inspect the oscilloscope upon receipt for any damage which may have occurred in transit. Check for loose or broken knobs, bent or broken connectors, and dents or scratches on the cabinet and panel surface.

Statements concerning models AN/USM-140B and AN/USM-141A apply also to models AN/USM-140C and AN/USM-141B respectively unless otherwise indicated.

2-2. POWER REQUIREMENTS.

The oscilloscope is normally shipped from the factory for use on a single phase, 115-volt ac source. A power source of 230-volts may be used if proper connections are made within the oscilloscope, in accordance with the instructions given below. The frequency must be in the range of 50 to 440 cps. The power demand varies, dependent on the combination of plug-in units used. Maximum power demand does not exceed 600 watts. Make sure the power source is proper before plugging in the cord.

The power transformer has two 115-volt primary windings which are parallel-connected for 115-volt ac operation. To convert to series connection for 230-volt use, proceed as follows:

a. First remove the instrument cabinet as follows (not required for the rack-mounted AN/USM-141):

(1) Carefully place the oscilloscope with its front panel down, resting it on its carrying handles.

(2) Remove the four cabinet-retaining screws from the rear of the instrument, and lift off the cabinet.

b. Locate the power transformer T401 (see figure 5-10.) Then change its primary wiring from parallel to series connection as follows, in accordance with the detail illustration in figure 2-1.

(1) Remove the jumpers between A1-A4 and A2-A5.

(2) Connect a jumper between A4-A5.

c. Locate the rectifier circuit board A401 which is also located on the chassis bottom as shown in figure 5-10. On the rectifier circuit board A401, remove jumper A. Replace it with a 100-K, 1/2 watt, 10% resistor. Remove jumper B and replace it with a 68-K, 1/2-watt, 10% resistor.

d. Replace fuses F401 and F402 with 4-ampere slow-blow type fuses. They are located behind the plug-in vertical preamplifier, accessible from the side of the instrument as shown in figure 5-11.

e. Replace the spare fuses with 4-ampere, slow-blow type. They are located at the side of the plug-in vertical preamplifier.

f. Replace the AN/USM-140B cabinet by the reverse of step a above.

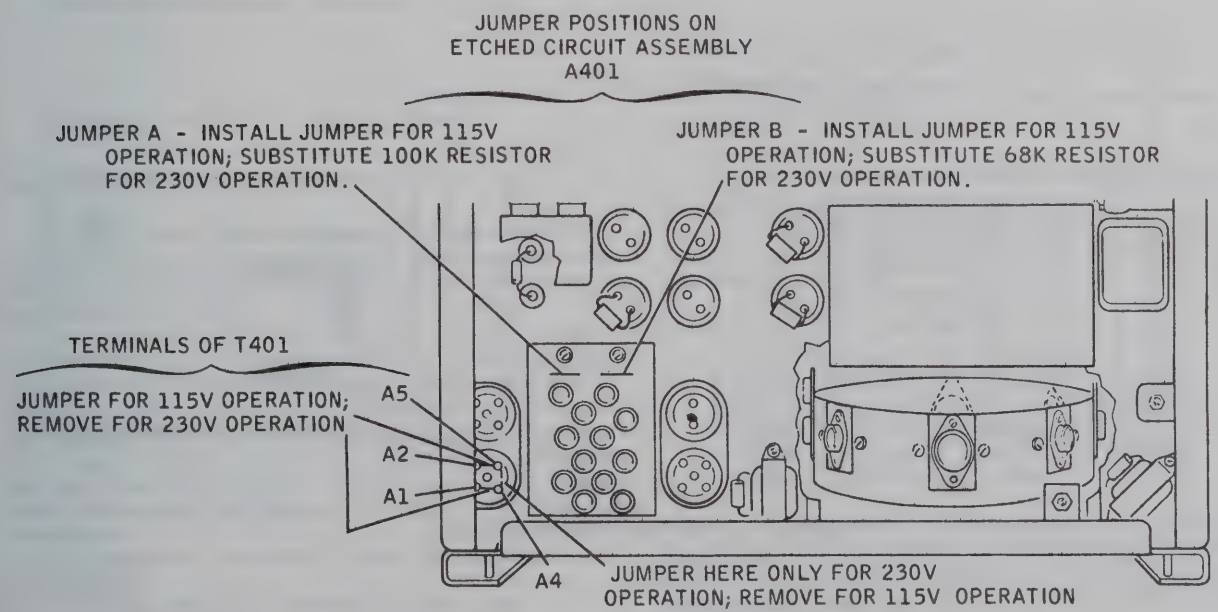
JUMPER POSITIONS ON
ETCHED CIRCUIT ASSEMBLY
A401
JUMPER A - INSTALL JUMPER FOR 115V OPERATION; SUBSTITUTE 100K RESISTOR FOR 230V OPERATION.
JUMPER B - INSTALL JUMPER FOR 115V OPERATION; SUBSTITUTE 68K RESISTOR FOR 230V OPERATION.
TERMINALS OF T401
JUMPER FOR 115V OPERATION; REMOVE FOR 230V OPERATION
A5
A2
A1
A4
JUMPER HERE ONLY FOR 230V OPERATION; REMOVE FOR 115V OPERATION

Figure 2-1. Power Connections for Operating the Oscilloscope on 230-volt Power Line

2-3. CABINET MODEL AN/USM-140B INSTALLATION.

The dimensions of the cabinet model oscilloscope are shown in figure 2-2. It may be mounted on a mobile test cart or placed on a bench, as desired. Position the oscilloscope to avoid room light reflections and to place all controls within convenient reach. Always provide adequate air circulation around the oscilloscope to ensure cooling. Do not crowd it into a tight enclosure which restricts air flow at sides and rear.

2-4. RACK MODEL AN/USM-141 INSTALLATION.

This oscilloscope model is provided in a rack mounting style to fit a standard 19-inch relay rack. This model is designated AN/USM-141. Figure 2-3 shows the dimensions of this instrument and indicates the installation details. The ends of the chassis slides attach at the front and rear of the rack as shown in figure 2-3. These slides allow the chassis to be moved in and out without tilting. Panel mounting holes match standard relay panel design. The instrument is shipped with the chassis-mounted portion of each slide attached, and the rack-mounting slides and attaching hardware (as listed in figure 2-3) packed separately ready for installation. To install, mount the rails securely as shown in figure 2-3, and slide the instrument in. Make sure adequate cooling air is available within the rack. Enclosed racks should have air ducts and filters built in.

When the slide-mounted oscilloscope is pulled out from the rack, the slide mechanism has a stop that halts it at the halfway-out position. Depressing the exposed slide button permits extension of the instrument to the full-out position. The slide safety button must be released to allow the oscilloscope to be taken out of the rack from the full-out position.

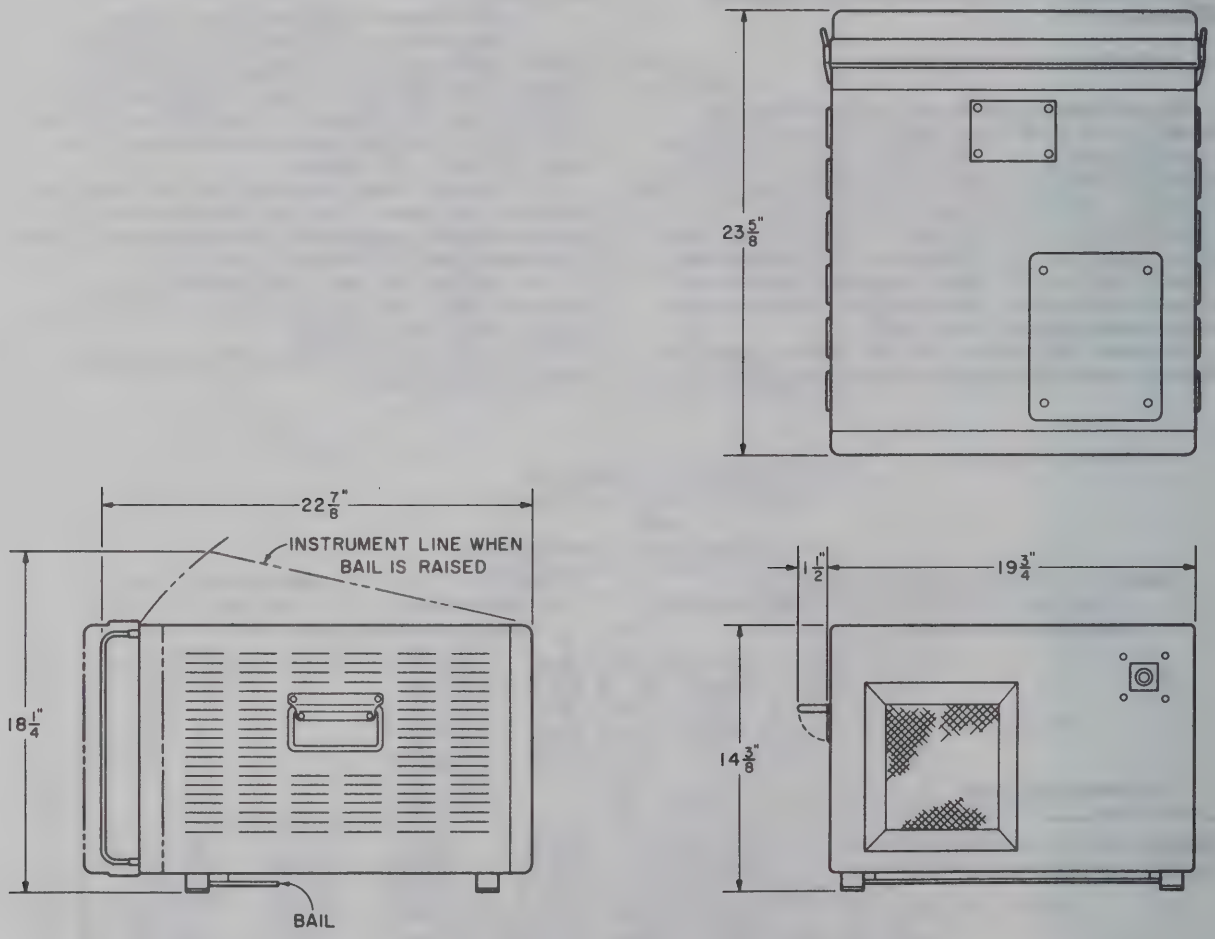

Figure 2-2. AN/USM-140B Dimensions

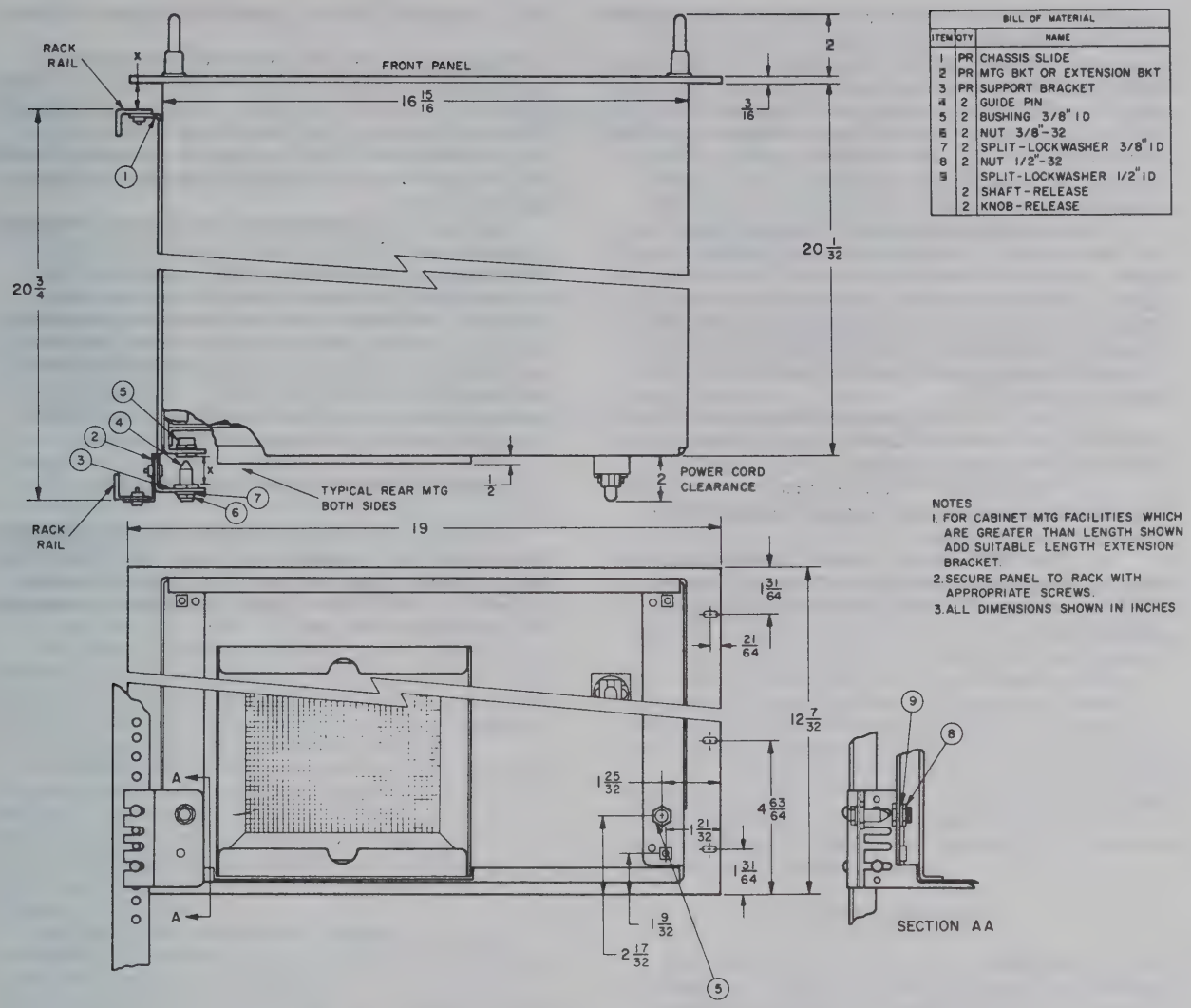

Figure 2-3. AN/USM-141 Dimensions

2-5. CABLES AND CONNECTORS.

The front cover of the oscilloscope cabinet provides the storage space for all cables and connectors that are needed to operate the oscilloscope. A list of the cables and connectors supplied is given in Table 1-1.

a. POWER CABLE.—An eight foot, three conductor power cable, CX-4704/U (8'0"), is supplied with the instrument. One end of the cable terminates in a plug which mates with a male jack on the rear of the instrument. The other end of the power cable terminates in a polarized three-contact male plug. One contact of the plug is an offset round pin which grounds the instrument chassis when the plug is used with a grounded receptacle.

To operate the instrument from a two-contact receptacle:

(1) Rotate the offset pin to the side.

(2) Loosen the screw on the offset pin and remove the green (ground) lead.

(3) Connect the green lead to ground.

(4) Insert the plug directly into the receptacle.

WARNING

If the green lead on the plug is not attached to ground when a two-contact receptacle is used, the instrument panel and cabinet may assume an off-ground potential and present a hazard to operating personnel.

b. TEST PRODS.—Two prods are supplied for connecting the two vertical input channels of the MX-2930B/USM to two external signal sources. The test prods permit quick connection to almost any form of

uninsulated circuitry. They are equipped with alligator jaws that are opened by pressing the rear flange on the prode forward. Each probe reduces the waveform height to 1/10th before application to the oscilloscope input; this sacrifice in signal level is made to increase the shunt capacitive reactance and resistance presented to the signal source. The resultant input impedance permits the probe to be connected to most circuits without excessive loading of the circuit under test.

The prods have attached cables terminated in BNC connectors for connection to the vertical channel inputs. A simple external adjustment is provided for adjusting the frequency response of the prods without the need for any additional equipment. The frequency response and waveform height division ratio should be checked whenever exact response must be assured. Refer to figure 3-2.

c. Two BNC terminated cables are supplied for connecting any of the oscilloscope inputs directly to a BNC-terminated signal source.

d. Two UHF-to-BNC adapters are provided so that connections can easily be made to equipments having UHF connectors.

e. Two BNC-to-dual banana adapters are provided to make easy connection at the oscilloscope panel to ordinary test leads terminated in banana connectors.

2-6. THE CRT BEZEL, GRATICULE AND FILTER.

The bezel for the CRT will receive standard oscilloscope cameras which are designed to be fitted over and clamped to the bezel. When using a camera on the oscilloscope, the filter and graticule may be left in position or either one may be removed if desired. The sharpest trace is obtained when using a medium intensity trace.

The graticule is etched on clear plastic. Both the graticule and filter are placed on the inside of the bezel next to the CRT face. The etched side of the graticule must be against the CRT face for least parallax. The filter is for use over the graticule to increase contrast between the trace and CRT face particularly when ambient light is bright and there are reflections on the CRT face. To remove or replace either the graticule or filter, remove the bezel by removing its four attaching screws.

2-7. INITIAL ELECTRICAL INSPECTION.

To energize the oscilloscope for the first time, and to check the oscilloscope for proper operation, follow the procedure given in figure 3-2. This procedure includes proper initial control adjustments to prepare the oscilloscope for use.

SECTION 3

OPERATION

3-1. FUNCTIONAL OPERATION.

Oscilloscope AN/USM-140B is a high-speed, precision instrument used to visually display electrical impulses and simple or complex recurrent waveforms. It consists primarily of a vertical amplifier and a horizontal amplifier which are connected to the deflection plates of a CRT. The vertical amplifier obtains signals from the vertical plug-in unit, amplifies them to the required voltage level, and applies the voltage to the vertical deflection plates of the CRT. The horizontal amplifier accepts either internally generated signals or externally supplied signals and amplifies them to the level required to drive the horizontal deflection plates of the CRT. The interaction of these two systems deflects the CRT beam in a manner that results in a visual display of the waveform on the face of the CRT.

The sweep generator which is part of the horizontal deflection system provides a variable range of sweep times to enable the operator to display one or several cycles of the waveform as required. This range is from 0.1 usec per cm to 5 seconds per cm.

In addition to the main oscilloscope unit the plug-in units listed in table 1-1 are covered in this manual. These plug-in units are designed for quick and easy installation or removal. A single locking knob holds each unit securely in the oscilloscope. No tools are needed to change them, and less than a minute is required.

The calibrator, which is an integral part of the oscilloscope, provides a convenient means of checking horizontal and vertical deflection. The calibrator generates a controlled 1-kc square-wave output which can be displayed on the CRT screen and used as a standard for the oscilloscope.

Two identical test prods are supplied as standard oscilloscope equipment. Isolation networks are built into the probes to reduce the input loading effect of the oscilloscope. The nominal scope input of 1 megohm shunted by 30 pf is changed to 10 megohms shunted by 10 pf at the probe tip. This results in a voltage drop of 10 to 1 in the probe.

3-2. PREPARATION FOR USE.

Before attempting to operate the oscilloscope, familiarize yourself with the functions of all the front panel controls and connectors, as given in paragraph 3-3, and read the operating precautions given in paragraph 3-4. Then refer to figure 3-2 for the initial turn-on and operating procedure.

3-3. DESCRIPTION OF CONTROLS AND CONNECTORS.

The controls and connectors of the oscilloscope which are normally used by the operator are shown in figure 3-1 and are described in table 3-1. The numbers in figure 3-1 relate each control to the descriptive text in table 3-1 and do not indicate a preferred order of operation.

3-4. OPERATING PRECAUTIONS.

a. Do not apply more than 600 volts peak to either the vertical or horizontal input connector or to the test prods.

b. Prior to turn on, set the INTENSITY control fully counterclockwise to avoid excessive intensity and possible burning of the CRT screen during warm up.

c. Allow at least two inches of clearance at the rear and both sides of the oscilloscope so its forced air cooling system will operate efficiently. Prevent warm air exhausted by other instruments from entering the air intake at the rear of the cabinet.

d. Check the air filter often. Clean it before it restricts air flow. Clean by dipping in warm soapy water. Rinse and dry before replacing. The filter removes easily by lifting the element up in its housing and pulling the bottom outward.

3-5. OPERATING PROCEDURES.

Procedures for turning on the oscilloscope, checking oscilloscope performance and obtaining various modes of operation are given in figures 3-2, 3-3, tables 3-2, 3-3, and paragraphs 3-6 through 3-14.

3-6. PROCEDURE FOR TURNING ON OSCILLOSCOPE; COMPENSATING TEST PRODS AND MAKING INITIAL ELECTRICAL INSPECTION.

The procedure of table 3-2, used in conjunction with figure 3-2, gives step-by-step instructions for turning on the oscilloscope, checking its operation and making initial adjustments in preparation for viewing an input signal.

3-7. SELECTING AND SYNCHRONIZING THE SWEEP AND ITS MAGNIFICATION.

The procedure of table 3-3, used in conjunction with figure 3-3, gives step-by-step instructions for synchronizing the oscilloscope sweep with an external signal or the signal being viewed, and for obtaining single sweep displays.

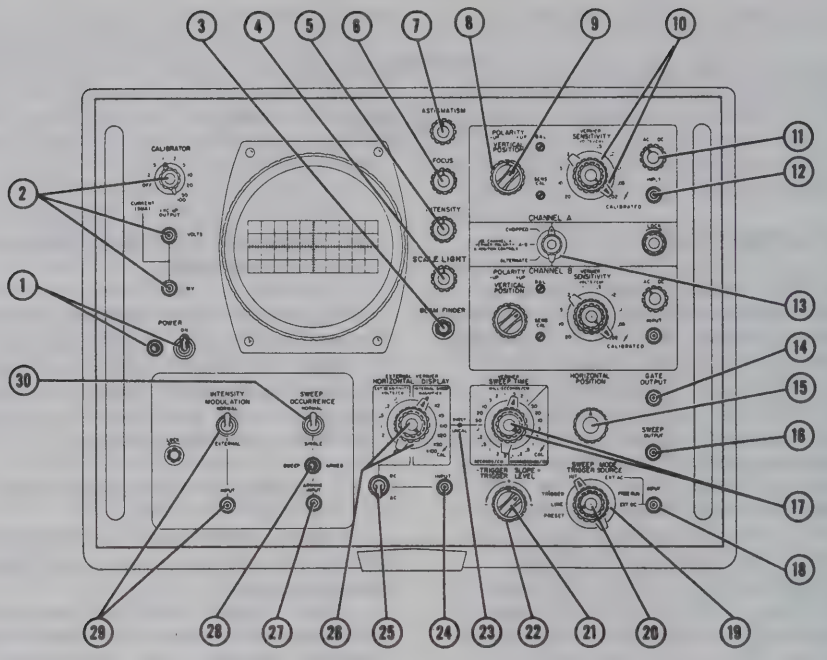

Figure 3-1. Oscilloscope Front-Panel Controls and Connectors

TABLE 3-1. DESCRIPTION OF FRONT-PANEL CONTROLS AND CONNECTORS (INDEX NUMBERS REFER TO FIGURE 3-1)

ITEM	DESCRIPTION AND FUNCTION
1	POWER Switch. In ON position, turns on all power to the oscilloscope; in off position, removes all power from oscilloscope. The adjacent indicator lamp is illuminated when the oscilloscope is turned on.
2	CALIBRATOR Switch and VOLTS-MV Connectors (type BNC). A 1-kc square wave calibration signal is provided at the VOLTS and MV connectors, with a peak-to-peak amplitude (in volts or millivolts depending on the connector used) corresponding to the CALIBRATOR switch position. With the CALIBRATOR switch set at CURRENT, a 1-kc square wave with 5 milliamperes peak current (with source impedance of 200K) is provided at the VOLTS connector.
3	BEAM FINDER Pushbutton. Used to locate off-screen traces when the oscilloscope beam has been driven off-screen. When this button is pressed, the beam is confined to the screen, brightened and defocused. Then the beam can be centered on the screen by adjusting the HORIZONTAL POSITION and VERTICAL POSITION controls while holding the BEAM FINDER pushbutton depressed. Release of the pushbutton returns the oscilloscope to normal functioning.
4	SCALE Control. Adjusts the brightness of the graticule illumination.
5	INTENSITY Control. Adjusts the brightness of the oscilloscope trace.
6	FOCUS Control. Adjusts the sharpness of the trace in conjunction with the ASTIGMATISM control.
7	ASTIGMATISM Control. Adjusts the sharpness of the trace in conjunction with the FOCUS control.
8	VERTICAL POSITION Control (black). Adjusts the vertical position of the Channel A presentation (Channel B has an identical control).
9	POLARITY Switch (red). Selects the direction of beam deflection for Channel A presentation; in +UP position, a positive signal deflects the beam upward (Channel B has an identical control).
10	SENSITIVITY Switch (black) and VERNIER Control (red). These controls select the sensitivity of the CHANNEL A input circuit. Each step of the switch is calibrated in VOLTS/CM of vertical deflection. With the VERNIER control in the CALIBRATED position, sensitivity exactly corresponding to the switch setting is provided. Turning the VERNIER control counterclockwise from the CALIBRATED position reduces the height of the displayed waveform and provides continuous adjustment of sensitivity between steps. (Channel B has identical controls.)
11	AC-DC Switch. Selects capacitive (AC) or direct (DC) coupling for the vertical input signal. Set to DC for viewing pulses longer than about .01 second or when the DC component of the signal is desired. Set to AC to avoid beam displacement due to DC voltage on signal (Channel B has an identical control).

TABLE 3-1 (Continued)

ITEM	DESCRIPTION AND FUNCTION
12	INPUT Connector (type BNC). Receives the input signal to Channel A (Channel B has an identical connector).
13	Vertical Presentation Selector Switch. Selects mode of CRT presentation of trace(s) from the dual-channel preamplifier: CHANNEL A only; CHANNEL B only; A–B (difference between Channel A and Channel B); ALTERNATE (Channel A and Channel B in sequence on alternate sweeps); CHOPPED (Channel A and Channel B on alternate 1-usec segments of each sweep).
14	GATE OUTPUT Connector (type BNC). Provides a +50-volt unblanking pulse during horizontal sweep time of trace. Connected to ground during retrace.
15	HORIZONTAL POSITION Control. Adjusts the horizontal position of the presentation.
16	SWEEP OUTPUT Connector (type BNC). Provides a ramp voltage (approximately -50 to +50 volts) which coincides with the internal horizontal sweep.
17	SWEEP TIME Switch (black) and VERNIER Control (red). These controls select the horizontal sweep rate. The switch is calibrated in 1-2-5 steps, in MICROSECONDS/CM, MILLISECONDS/CM, and SECONDS/CM. With the VERNIER control in the CAL (calibrated) position, the sweep rate corresponds exactly to the switch setting. Turning the VERNIER control counterclockwise from the CAL position slows the sweep and provides continuous adjustment of sweep rate between steps.
18	INPUT Connector (type BNC). Accepts an external sweep triggering signal.
19	TRIGGER SOURCE Switch (black). Selects source of the sweep triggering signal (power LINE, INTernal, EXTernal AC, or EXTernal DC).
20	SWEEP MODE Control (red). Provides a variable adjustment of the sensitivity of the sweep circuit to the trigger signal. Allows selection of either triggered or free running sweep by rotating the control pointer to either the left-hand (TRIGGER) or right-hand (FREE-RUN) sector. When turned fully counterclockwise to the PRESET position, provides greatest sensitivity and permits stable triggering with nearly all signals.
21	TRIGGER SLOPE Switch (red). Selects the portion of the triggering waveform which triggers the sweep: + (positive-going slope) or - (negative-going slope).
22	TRIGGER LEVEL Control (black). Selects the amplitude point on the input signal waveform at which the sweep will be triggered (range is ±30 volts from the center 0 position).
23	SWEEP UNCAL Indicator. Is illuminated when the combined settings of the SWEEP TIME and HORIZONTAL DISPLAY switches place the sweep at an uncalibrated speed.
24	INPUT Connector (type BNC). Accepts an externally applied horizontal input signal.
25	AC-DC Switch. Selects capacitive coupling (AC) or direct coupling (DC) for the external horizontal input signal. Set to DC for externally-driven sweep times longer than 1 millisecond or when the DC component of the signal is desired. Set to AC to avoid beam displacement due to DC voltage on signal.
26	HORIZONTAL DISPLAY Switch (black) and EXTERNAL VERNIER Control (red). Within its EXT SENSITIVITY sector, the switch selects the sensitivity of the horizontal input circuit to an external signal, in VOLTS/CM of horizontal deflection. With the EXTERNAL VERNIER control in the CAL position, sensitivity exactly corresponding to the switch setting is provided. Turning the EXTERNAL VERNIER control counterclockwise from the CAL position reduces the width of the displayed waveform and provides continuous adjustment of sensitivity between steps. Within its INTERNAL SWEEP MAGNIFIER sector, the HORIZONTAL DISPLAY switch in the X1 position selects the internal sweep as established by the SWEEP TIME switch. In the X2 through X100 positions, the HORIZONTAL DISPLAY switch expands the waveform presentation horizontally by a factor corresponding to its setting, by increasing the sweep speed a corresponding amount over that selected by the SWEEP TIME switch.
27	ARMING INPUT Connector (type BNC). Accepts the external signal which arms the internal sweep circuit to allow triggering of one sweep when the SWEEP OCCURRENCE switch is set to SINGLE. (The arming signal must be a pulse of +15 to +25 volts with a duration of 1 to 200 microseconds.)
28	SWEEP ARMED Indicator. Indicates that the sweep circuit is ready to be triggered by an external or internal pulse for a single sweep. Lamp extinguishes after sweep starts.
29	INTENSITY MODULATION Switch and INPUT Connector (type BNC). Selects NORMAL mode (no intensity modulation) or EXTERNAL modulation of trace intensity. INPUT connector is for the external intensity modulating signal; +20 volts will provide complete blanking of a trace of normal intensity.
30	SWEEP OCCURRENCE. Selects either NORMAL- or SINGLE-sweep operation.

CAUTION

For proper operation, both plug-in units must be pushed in firmly and locked in place with their LOCK knobs. Lock the knobs by turning toward the adjacent side of the instrument following the arrow on the panel.

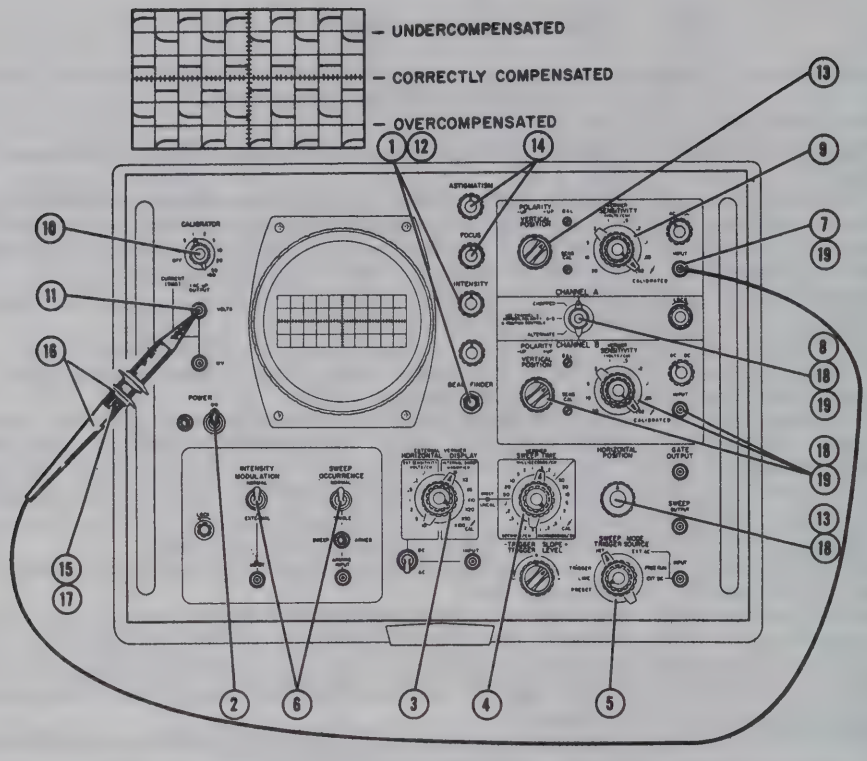

Figure 3-2. Procedure for Turning on Oscilloscope, Compensating Probe, and Making Initial Electrical Inspection

TABLE 3-2. PROCEDURE FOR TURNING ON OSCILLOSCOPE AND PREPARING IT FOR USE (STEP NUMBERS ARE KEYED TO INDEX NUMBERS ON FIGURE 3-2)

STEP	ACTION
1	Turn INTENSITY control fully counterclockwise.
2	Connect the oscilloscope to the 115-volt power source and switch POWER to ON. Allow five minutes warm up.
3	Set HORIZONTAL DISPLAY switch to X1; VERNIER control to CAL.
4	Set SWEEP TIME switch to .5 MILLISECONDS/CM.; VERNIER control to CAL.
5	Set SWEEP MODE control to PRESET; TRIGGER SOURCE switch to INT.
6	Set INTENSITY MODULATION and SWEEP OCCURRENCE switches to NORMAL.
7	Connect Test Prod BNC terminal to CHANNEL A INPUT connector.
8	Set Vertical Presentation Switch to CHANNEL A.
9	Set CHANNEL A SENSITIVITY switch to .05 VOLTS/CM.
10	Set CALIBRATOR switch to 2.
11	Connect Test Prod tip to CALIBRATOR VOLTS connector.
12	Rotate INTENSITY control clockwise until trace appears. If CRT remains blank, press BEAM FINDER button.

TABLE 3-2. (Continued)

STEP	ACTION
13	Adjust HORIZONTAL POSITION and CHANNEL A VERTICAL POSITION controls until trace is centered on screen. If necessary, readjust INTENSITY.
14	Adjust FOCUS and ASTIGMATISM controls to obtain a thin trace.
15	Loosen knurled locknut behind rear flange on prod.
16	Holding vinyl sheath behind locknut, rotate rear flange to obtain the best square wave (see insert). Check that vertical deflection is four centimeters (corresponding to .05 volts/cm sensitivity with 2 volts calibrator output and 10:1 attenuation in probe).
17	Tighten prod locknut without changing adjustment.
18	Turn Vertical Presentation Switch to CHANNEL B. Repeat the procedure of steps 9 through 17 for Channel B and the other test prod.
19	Repeat procedure with the Vertical Presentation Switch set to ALTERNATE and with both prods connected to the calibrator (one driving Channel A and one driving Channel B) to test both channels simultaneously.
20	The oscilloscope is ready for use. To display a single signal connect either probe to the signal and switch the Vertical Presentation Switch to the corresponding channel. Adjust the SENSITIVITY, HORIZONTAL DISPLAY and SWEEP TIME switches and the TRIGGER controls as necessary to obtain and synchronize the desired display. (Refer to table 3-3 and figure 3-3 for more detailed instructions.) For dual-trace operation and other specialized functions, refer to paragraphs 3-7 through 3-11.

3-8. HORIZONTAL DEFLECTION BY EXTERNAL SIGNALS.

After performing turn-on procedure in table 3-2, steps 1 through 14, connect the external signal to the Horizontal INPUT connector (24, figure 3-1) through either a test prod, a BNC-terminated coaxial cable, or plain wire leads with a BNC-to-binding post adapter. Then set the HORIZONTAL DISPLAY selector (26, figure 3-1) within its EXT SENSITIVITY sector to obtain the desired deflection in VOLTS/CM. To read the voltage of the horizontal deflection directly from the CRT trace, set the EXTERNAL VERNIER (26, figure 3-1) to CAL. Set the Input Coupling switch (25, figure 3-1) to AC or DC as required (refer to item 25, table 3-1).

3-9. DUAL-TRACE OPERATION.

Dual-trace operation is used to compare two different input signals, such as the input and output signals of an amplifier or network.

The vertical plug-in provides two types of dual-trace operation as selected by the Vertical Presentation Switch (13, figure 3-1): ALTERNATE and CHOPPED. On ALTERNATE operation, the output of one channel is shown on the CRT during one sweep and the output of the other channel during the next sweep. On chopped operation channels are switched at a one-megacycle rate, so both signals appear in alternate 1-microsecond segments during each sweep.

Alternate operation is for comparing two signals which require use of high sweep speeds. However, for most accurate time comparisons, the sweeps must be triggered by an external signal that is synchronized with both vertical signals. In many cases, one of the vertical signals can be used as the trigger signal as well (by making appropriate external connections). Internal triggering on the vertical signal cannot be used because of the instability that might be produced by the dual-channel display switching. When signal frequency permits, greater accuracy can be obtained by comparing the two signals during a single sweep, as made possible by chopped operation.

Chopped operation is for comparing two signals while using sweep speeds below about five microseconds/centimeter (which are low compared to the 1-megacycle switching rate). This type of operation permits precise time comparisons because both signals are displayed during the same sweep. In general, external triggering is required. If internal triggering is attempted, the one-megacycle switching signal may trigger the sweep and cause an unstable presentation.

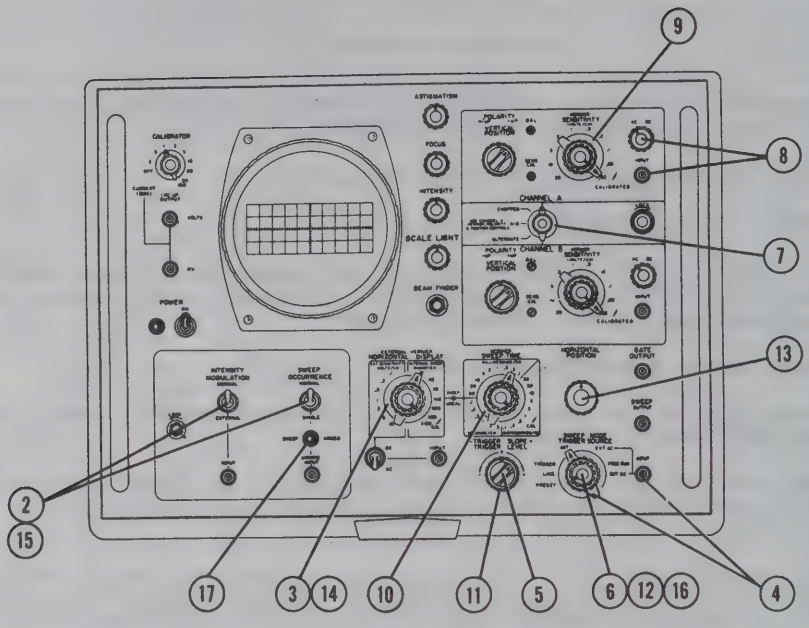

Figure 3-3. Selecting and Synchronizing the Sweep and Sweep Magnification

TABLE 3-3. SELECTING AND SYNCHRONIZING THE SWEEP AND SWEEP MAGNIFICATION (STEP NUMBERS ARE KEYED TO INDEX NUMBERS ON FIGURE 3-3)

STEP	ACTION
1	Perform turn on procedure as described in steps 1-14 of figure 3-2 and table 3-2.
2	For normal operation with recurrent sweep, check that INTENSITY MODULATION and SWEEP OCCURRENCE switches are set to NORMAL.
3	Set HORIZONTAL DISPLAY switch to X1.
4	To provide for internal triggering from the vertical presentation waveform (normally used with single-channel or A-B differential display), set TRIGGER SOURCE switch to INT. If sweep is to be triggered by an external signal, connect signal to trigger INPUT connector and set TRIGGER SOURCE switch to EXT AC or EXT DC.
5	Set TRIGGER SLOPE switch to trigger on positive- or negative-going slope of the triggering signal as desired. When internal triggering is being used, reversing the POLARITY switch of the channel being monitored reverses the side of the wave that triggers the sweep in addition to inverting the display.
6	Set SWEEP MODE control to PRESET. For most sync signals and frequencies the PRESET SWEEP position gives stable synchronization.
7	Select CHANNEL A or CHANNEL B with Vertical Presentation Switch.
8	Connect signal which is to be checked to INPUT connector of channel selected, and set AC-DC switch for type of coupling desired.
9	Set SENSITIVITY switch for vertical deflection desired. To read voltage of vertical deflection, set VERNIER control to CALIBRATED.

TABLE 3-3. (Continued)

STEP	ACTION
10	Set SWEEP TIME switch for horizontal display desired. To read time from the horizontal deflection of the trace, set VERNIER control to CAL. Otherwise, set VERNIER control as desired to synchronize the sweep with the frequency of the vertical signal to produce a display containing a specific number of cycles or other desired features of the waveform.
11	Adjust TRIGGER LEVEL control to the voltage point on the waveform that should begin the sweep.
12	If necessary readjust SWEEP MODE and/or TRIGGER LEVEL controls to stabilize the sweep. When the trigger frequency is approximately 10 mc or higher, the FREE RUN position of the SWEEP MODE control may be the best position.
13	Adjust the HORIZONTAL POSITION control so that the portion of trace to be observed or magnified is under the center vertical line of graticule.
14	Set the HORIZONTAL DISPLAY switch to the desired degree of magnification. If combination of selected sweep and degree of magnification produces a sweep faster than 0.02 usec/cm, the SWEEP UNCAL indicator will light indicating that sweep time is no longer calibrated.
15	For observation of transient pulses and other signals that cannot use recurrent sweep, operate the oscilloscope in the single sweep mode as follows: Set the SWEEP OCCURRENCE switch to SINGLE. (Make all other vertical, horizontal, and trigger control settings as desired, in accordance with the previous directions.) Then apply a +15 to +25 volt (peak) pulse with a duration of 1 to 200 μsec to the ARMING INPUT connector, whenever a single sweep is desired. Once the circuit is armed, the next internal or external trigger pulse will trigger a sweep.
16	Arming can also be accomplished without applying an external pulse to the ARMING INPUT connector by use of the SWEEP MODE control. If the desired position of the SWEEP MODE control for proper triggering is outside the PRESET position, turn the SWEEP MODE control quickly to PRESET and back to the desired position to arm the sweep. If the desired position of the SWEEP MODE control is the PRESET position, momentarily switch the control out of PRESET and back to PRESET to arm the sweep. In either case, the next internal or external trigger pulse will trigger a sweep.
17	After an external arming pulse is received, or the SWEEP MODE control is switched as in step 16, the SWEEP ARMED indicator lights. This indicator extinguishes as sweep begins.

3-10. DIFFERENTIAL OPERATION.

Differential operation, as selected by the A-B position of the Vertical Presentation Switch (13, figure 3-1), permits observation of the difference between two signal voltages. It is useful for observing signals which are balanced with respect to ground.

In differential operation, ripple or stray pickup which is common to the two main signals is attenuated. With both the CHANNEL A and CHANNEL B SENSITIVITY switches (10, figure 3-1) set to .02 VOLTS/CM, common-mode signals are attenuated at least 100:1; with the SENSITIVITY switches at other settings, common-mode signals are attenuated at least 20:1. However, the amplitude of common-mode signals (before attenuation) should not exceed the equivalent of 100 centimeters of deflection. For example, if both SENSITIVITY switches are set to .02 VOLTS/CM, the common-mode signal should not exceed 2 volts (20 volts at probe input). Excessive common-mode signals overload the amplifiers, causing causing distortion.

When in differential operation, the most accurate difference signal and greatest common-mode rejection is obtained when the two input signals to the oscilloscope are balanced and both SENSITIVITY switches are set to the same setting.

During differential operation, the SENSITIVITY and the AC-DC Input Coupling switches (10 and 11, figure 3-1) of both channels operate on their respective signals; however, only the Channel A VERTICAL POSITION, POLARITY, and VERNIER controls (8, 9, and 10, figure 3-1) are effective.

3-11. SINGLE-SWEEP OPERATION.

Single-sweep operation is intended for viewing transients and other one-shot signals and aperiodic signals which cannot be viewed using normal recurrent-sweep operation. In single-sweep operation, the sweep generator is disabled at the end of each sweep and must be armed before it can generate another horizontal sweep trace. The sweep generator can be armed automatically with an external signal or manually with the SWEEP MODE control. Detailed instructions for single-sweep operation are given in steps 15 through 17 of table 3-3.

3-12. OPERATION WITH INTENSITY MODULATION.

First perform turn-on procedure in table 3-2. Then set INTENSITY MODULATION switch (29, figure 3-1) to EXTERNAL and connect the external signal to the Intensity Modulation INPUT connector just below the switch. A signal of +20 volts peak will blank the trace when the trace is set for average intensity. Negative voltages brighten the trace.

3-13. OPERATION WITH DIRECT CONNECTION TO CRT FOR VERTICAL DEFLECTION.

WARNING

Before making connections directly to the deflection plates of the CRT, disconnect the oscilloscope from the ac power source. The exposed terminals used for making direct-deflection connections operate at bias voltages of about 200 volts dc.

a. With power disconnected from the oscilloscope, remove the access plate on the top of the cabinet, which exposes the CRT direct deflection terminals as shown in figure 3-4.

b. Remove the leads from vertical deflection plate terminals D3 and D4.

c. Connect input coupling components to provide for input signal and bias voltage coupling as shown in figure 3-4. Use capacitors with good high-frequency response, such as C103 listed in table 6-2. With the bias connections shown, the front panel VERTICAL POSITION control remains effective.

d. For single-ended input, ground the common signal lead at the point shown by the dashed ground lead in figure 3-4. For balanced input, leave both signal leads ungrounded.

e. Connect the input power cord and turn the oscilloscope on. The procedures previously described for horizontal sweep operation can be used, except that an external signal must be used for triggering the sweep.

3-14. SUMMARY OF OPERATING PROCEDURES.

Refer to table 3-2 and figure 3-2 for a summary operating procedure. Summary information about the function of any particular control(s) can be found in table 3-1 which is keyed to control locations shown in figure 3-1.

3-15. TURN-OFF PROCEDURE.

When the oscilloscope is not being used but it is necessary to leave it turned on for instant service, rotate the INTENSITY control fully counterclockwise to extinguish the trace and prevent burning the CRT. At all other times, turn the intensity control fully counterclockwise and turn the POWER switch off to remove all power from the oscilloscope.

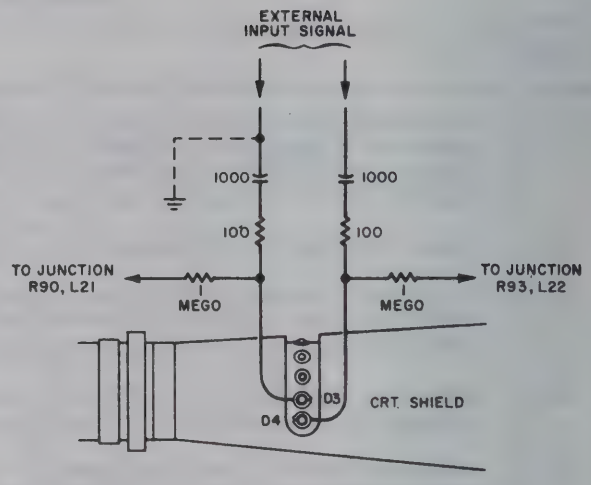

Figure 3-4. Connections for Direct Deflection Operation

3-16. OPERATOR'S MAINTENANCE.

Maintenance by operating personnel is limited to checking and adjusting vertical sensitivity and balance, cleaning the air filter, replacing fuses, or emergency replacement of electron tubes and semiconductors.

Fuses for the +110 volt and -100 volt power supplies, plus spare fuses for these supplies, are located at the rear of the horizontal plug-in compartment. Fuses for the +370 volt supply, 6.3 volt supply and the power line, plus a spare fuse for each, are located at the rear of the vertical plug-in compartment (see figure 5-11).

Localization of trouble to a particular electron tube or semiconductor often requires technical skill and use of trouble-shooting techniques. In many cases a calibration adjustment is required when a tube is replaced. Therefore, only a technician should replace tubes and semiconductors, except in an emergency.

3-17. OPERATING CHECKS AND ADJUSTMENTS.

The following tests show the operating condition of the oscilloscope. The checks consist of testing vertical and horizontal sensitivity calibration, and vertical balance. Vertical sensitivity calibration need be checked only occasionally under normal circumstances. However, if the oscilloscope is subjected to extreme environmental conditions or is to be used to the full extent of its rated accuracy, vertical sensitivity calibration should be checked each time the oscilloscope is put into operation.

a. VERTICAL SENSITIVITY CHECK.—Perform the turn-on procedure given in figure 3-2 and table 3-2, checking Channel A and Channel B in turn. If a test prod is used in this test, set the CALIBRATOR

switch to 2 and input sensitivity to .05 VOLTS/CM and if necessary, adjust the CHANNEL A SENS. CAL. (screwdriver adjustment on panel of Dual Trace Preamplifier) on the panel to obtain a square wave exactly 4 cm high. If a plain wire connection is used for the calibration voltage input, set the CALIBRATOR to .2 to produce the same deflection. Repeat the procedure for Channel B. If either channel cannot be adjusted to the proper sensitivity, the oscilloscope should be calibrated in accordance with the procedure given in Section 5.

b. BALANCE CHECK.—Balance is properly set if the presentation for either channel has no vertical shift when the sensitivity VERNIER control for that channel is rotated, or when the POLARITY switch is switched between + UP and - UP. The adjustment is not critical and need be set only when the shift is enough to be annoying. Proceed as follows:

(1) With the oscilloscope turned on, set the Vertical Presentation Switch to CHANNEL A and SWEEP MODE to FREE RUN.

(2) Adjust Channel A BAL (screwdriver adjustment on panel of Dual Trace Preamplifier) to obtain minimum vertical shift of trace as Channel A. POLARITY is switched between + UP and - UP.

(3) Repeat for Channel B.

c. HORIZONTAL SENSITIVITY CHECK.

(1) Connect VOLTS output of CALIBRATOR to INPUT connector of horizontal amplifier (24, figure 3-1) using a plain wire connection.

(2) Set CALIBRATOR switch to 5.

(3) Set the HORIZONTAL DISPLAY control to EXT., SENSITIVITY to 1 VOLTS/CM, and set the EXTERNAL VERNIER control to CAL.

(4) The trace should be deflected 5 centimeters ±0.25 cm. If the horizontal deflection is outside the above range, the oscilloscope should be calibrated in accordance with the procedure given in Section 5.

3-18. PREVENTIVE MAINTENANCE.

The air filter installed over the air intake on the rear of the cabinet prevents dust and dirt from entering the oscilloscope. The filter must be cleaned periodically so as not to restrict air flow into the cabinet. For the cleaning procedure, see paragraph 5-2a. The fan motor requires one drop of oil in each bearing once every six months, in continuous operation (see paragraph 5-2b).

WARNING

This instrument contains voltages as high as 8600 volts, which can cause death on contact. Turn the instrument off before touching any internal part.

3-19. EMERGENCY MAINTENANCE.

a. THERMAL SWITCH.—The oscilloscope has a thermal switch which opens the main power circuit if the temperature within the cabinet exceeds 140°F, ±5°F. If the instrument goes off during operation remove the Dual Trace Preamplifier plug-in with POWER still turned ON, and observe the neon lamp to the right of the fuse bracket inside the plug-in compartment. If the lamp is lit, the oscilloscope was overheated. Turn off the POWER switch, and investigate the cause of overheating. Be sure there is adequate clearance around the cabinet for the free circulation of air, that the air entering the cabinet is not preheated by recirculation, that the air filter is clean, and that the motor turns the fan at normal speed (approximately 2400 rpm). The thermal switch will automatically reclose the main power circuit when the temperature inside the cabinet returns to 120°F, ±5°F. Before returning the oscilloscope to service, be sure the fan is operating.

b. FUSE REPLACEMENT. — If the oscilloscope fails to operate when connected to a proper power source, check all fuses by substitution. (See paragraph 3-16 and figure 5-11 for fuse locations.)

c. EMERGENCY REPLACEMENT OF TUBES AND SEMICONDUCTORS.—In an emergency, operating personnel can replace tubes and semiconductors listed in table 3-2 without making the indicated adjustment. However, a technician should make the indicated adjustment as soon as possible after the replacement is made. In non-emergency conditions, tube replacement should be carried out as a part of systematic trouble shooting, following the procedure of Section 4. (See paragraph 5-2b for instructions for access to the oscilloscope chassis and figure 5-6 for an overall tube and semiconductor illustration.)

TABLE 3-4. ADJUSTMENTS REQUIRED FOLLOWING TUBE AND SEMICONDUCTOR REPLACEMENT

TUBE OR SEMICONDUCTOR	FUNCTION	ADJUSTMENT
	Main Vertical Amplifier (Etched Circuit Assemblies A1 and A2; figures 5-14 and 5-15)	
V1	Cathode Follower	None
V2	Input Amplifier/Cathode Follower	Main Vertical Amplifier Gain and High Frequency Compensation (paragraph 5-4f)
V3	Input Amplifier/Cathode Follower	Main Vertical Amplifier Gain and High Frequency Compensation (paragraph 5-4f)
V4	Internal Trigger Amplifier/ Cathode Follower	None
V5	Internal Trigger Amplifier/ Cathode Follower	None
V6	Cathode Follower	None
V7	Constant Current Generator	None
V10	Cathode Follower	None
V11 through V13	Output Amplifier	Main Vertical Amplifier Gain and High Frequency Compensation (paragraph 5-4f)
	Sweep Generator (Etched Circuit Assembly A101; figure 5-17)	
CR101	Clamp	None
CR102	Limiter	None
CR103	Limiter	None
CR104	Switch Diode	Sweep Time Calibration (paragraph 5-4e(2))
V101	Trigger Amplifier	Trigger Symmetry (paragraph 5-4e(1)
V103	Trigger Generator	None
V104	Gate Generator	Preset (paragraph 5-4e(1))
V105	Gate Generator/Clamp	Preset (paragraph 5-4e(1))
V107	Cathode Follower	None
V109	Integrator	Sweep Time Calibration (paragraph 5-4e(2))
V113	Bias Control Cathode Follower	None
V114	Cathode Follower	None
V115	Output Cathode Follower	None
	Horizontal Amplifier (Etched Circuit Assemblies A202 and A203; figures 5-23 and 5-24)	
Q201/202	Differential Amplifier	All Horizontal Amplifier Adjustments (par. 5-4d)
V201	External Input Cathode Follower/Input Cathode Follower	External Vernier Balance (paragraph 5-4d(1))
V202	Cathode Follower	X100 Gain and Balance (paragraph 5-4d(2))
V203	Cathode Follower	None
V204/205	Differential Amplifier	All Horizontal Amplifier Adjustments (par. 5-4d)
V206	Output Cathode Follower	None
V207	Capacitance Driver	Capacitance Driver (paragraph 5-4d(3))

TABLE 3-4. (Continued)

TUBE OR SEMICONDUCTOR	FUNCTION	ADJUSTMENT
	High Voltage Power Supply (Etched Circuit Assemblies A301 and A302; figures 5-26 and 5-27)	
V301	Amplifier	High Voltage, R321 (paragraph 5-4b)
V304	R.F. Oscillator	None
V305	CRT	All Main Vertical Amplifier and Horizontal Amplifier Adjustments (paragraphs 5-4d and f)
V308 through V311	Rectifier	None
	Calibrator (Etched Circuit Assembly A301; figure 5-26)	
V306	Multivibrator	None
V307	Clamp Diode/Disconnect Diode	None
	Low Voltage Power Supplies (Etched Circuit Assemblies A401 and A402; figures 5-28 and 5-29)	
CR401 through CR415	Rectifier	None
CR413	Reference Diode	None
CR414/415	Rectifier	None
CR416	Reference	6.3 Volt Supply (paragraph 5-4a(2))
Q401 through Q419	Amplifier, Emitter Followers, Regulators	None
V401	Voltage Regulator	-100 Volt Supply (paragraph 5-4a(1))
	MX-2930A/USM Dual Trace Preamplifier (Etched Circuit Assemblies A501 and A502; figures 5-31 and 5-32)	
CR501 through CR506	Coupling, Clamp Diodes	None
Q501/502	Differential Amplifier	Sensitivity Calibration and Vernier Balance, Channel A (paragraphs 5-4g(1) and (2))
Q503/504	Differential Amplifier	Sensitivity Calibration and Vernier Balance, Channel B
V501	Cathode Follower	Vernier Balance, Channel A (paragraph 5-4g(1))
V502	Transistor Driver	Sensitivity Calibration and Vernier Balance, Channel A (paragraphs 5-4g(1) and (2))
V503	Output Cathode Follower	None
V504	Cathode Follower	Vernier Balance, Channel B (paragraph 5-4g(1))
V505	Transistor Driver	Sensitivity Calibration and Vernier Balance, Channel B (paragraphs 5-4g(1) and (2))
V506	Output Cathode Follower	None
V507	Amplifier/Cathode Follower	None
V508	Switching Multivibrator	Multivibrator Frequency (paragraph 5-4g(6))
	MX-3078/USM Auxiliary Plug-In (figure 5-36)	
CR1	Limiter	None

SECTION 4

TROUBLE SHOOTING

4-1. INTRODUCTION.

This section contains information that can be used to quickly and efficiently locate and correct the cause of an equipment malfunction or performance degradation. The basic troubleshooting technique is based on the following six logical steps:

a. SYMPTOM RECOGNITION. - Not all malfunctions are immediately obvious in normal use, such as performance degradation. Such faults will be exposed, however, in the Reference Standards Procedures of Section 5. The technician should be critical of any variation in equipment performance to indicate the "not so apparent" malfunctions.

b. SYMPTOM ELABORATION. - When a malfunction is suspected, the technician should test all performance characteristics to gain as much information as possible about the oscilloscope performance. When all the information is collected about the response to front-panel controls, CRT display behavior, etc., it will then be easier to localize the faulty section.

c. DETERMINING PROBABLE FAULTY SECTION. - A thorough understanding of the principles of operation of the oscilloscope, which are included in this section, will help the technician to make a logical choice as to which circuit or section could cause the improper performance. In most cases it is a good procedure to "think through" or list the faulty sections stage by stage before proceeding with trouble shooting. This Troubleshooting Section is arranged with a separate theory description and troubleshooting procedures for each major section, including functional and servicing block diagrams, to aid in understanding individual circuits and localizing troubles to them.

d. LOCATING THE FAULTY FUNCTION. - Refer to the list of probable faults made in step c and, if necessary, arrange them into the most efficient testing order. The troubleshooting procedures in this section are designed to isolate tests to the major sections of the oscillograph.

e. LOCALIZING THE FAULTY CIRCUIT. - When the faulty major section has been isolated, there still remain several possibilities of faulty circuits within that section.

f. FAILURE ANALYSIS. - When the faulty circuit or component has been discovered, it is important to review the steps that led to its discovery to determine where the primary fault may be. For example, a faulty vacuum tube may have been caused by an undiscovered shorted capacitor in its circuit. Any additional information about the circuit performance gathered at the very beginning of the troubleshooting procedure can be very useful now. This review is necessary to make certain that the discovered fault is the cause and not the result of the malfunction.

g. TEST EQUIPMENT REQUIRED FOR TROUBLE SHOOTING. - Table 4-1 lists the test equipment required for trouble shooting.

h. WIRING COLOR CODE. - Where color coding is not the same in all models, the color coding, for Model AN/USM-140C and AN/USM-141B, is shown in parentheses.

4-2. OVERALL OSCILLOSCOPE.

a. FUNCTIONAL DESCRIPTION OF OSCILLOSCOPE. - The oscilloscope produces a graphical picture of applied voltage variations on the face of a CRT. Figure 4-1 is an overall functional block diagram of the oscilloscope. The functional sections are:

(1) Low-Voltage Power Supply
(2) High-Voltage Power Supply
(3) Beam Finder Circuit
(4) Main Vertical Amplifier
(5) Horizontal Amplifier
(6) Sweep Generator
(7) MX-3078/USM Horizontal Plug-In
(8) Calibrator Circuit
(9) MX-2930B/USM Vertical Plug-In

b. LOW-VOLTAGE POWER SUPPLIES. - The low-voltage power supplies provide the voltages required by the oscilloscope and plug-in units. All DC voltages provided by the supplies (except to the fan) are regulated.

c. HIGH-VOLTAGE POWER SUPPLY. - The high-voltage power supply generates the high voltages required for operation of the CRT.

d. BEAM FINDER CIRCUIT. - The beam finder circuit intensifies and centers the CRT display so that "lost" traces may be located and adjusted.

e. MAIN VERTICAL AMPLIFIER. - The main vertical amplifier amplifies the signals received from the vertical plug-in and applies the signals to the vertical deflection plates of the CRT. The main vertical amplifier also applies a synchronization signal derived from the vertical input signal to the sweep generator for internal triggering of the sweep.

f. HORIZONTAL AMPLIFIER. - The horizontal amplifier converts the sweep or external horizontal signal to a balanced signal, amplifies it, and applies it to the horizontal deflection plates of the CRT.

g. SWEEP GENERATOR. - The sweep generator generates a linearly rising voltage to sweep the CRT beam horizontally across the CRT screen. The sweep generator thus provides a linear time base on which to display the vertical signals. The generator can be operated as a triggered or free-running circuit. A delay line (0.2 microsecond) is provided within the main vertical amplifier to delay the displayed signal long enough to allow the sweep generator to be triggered before the signal appears on the CRT.

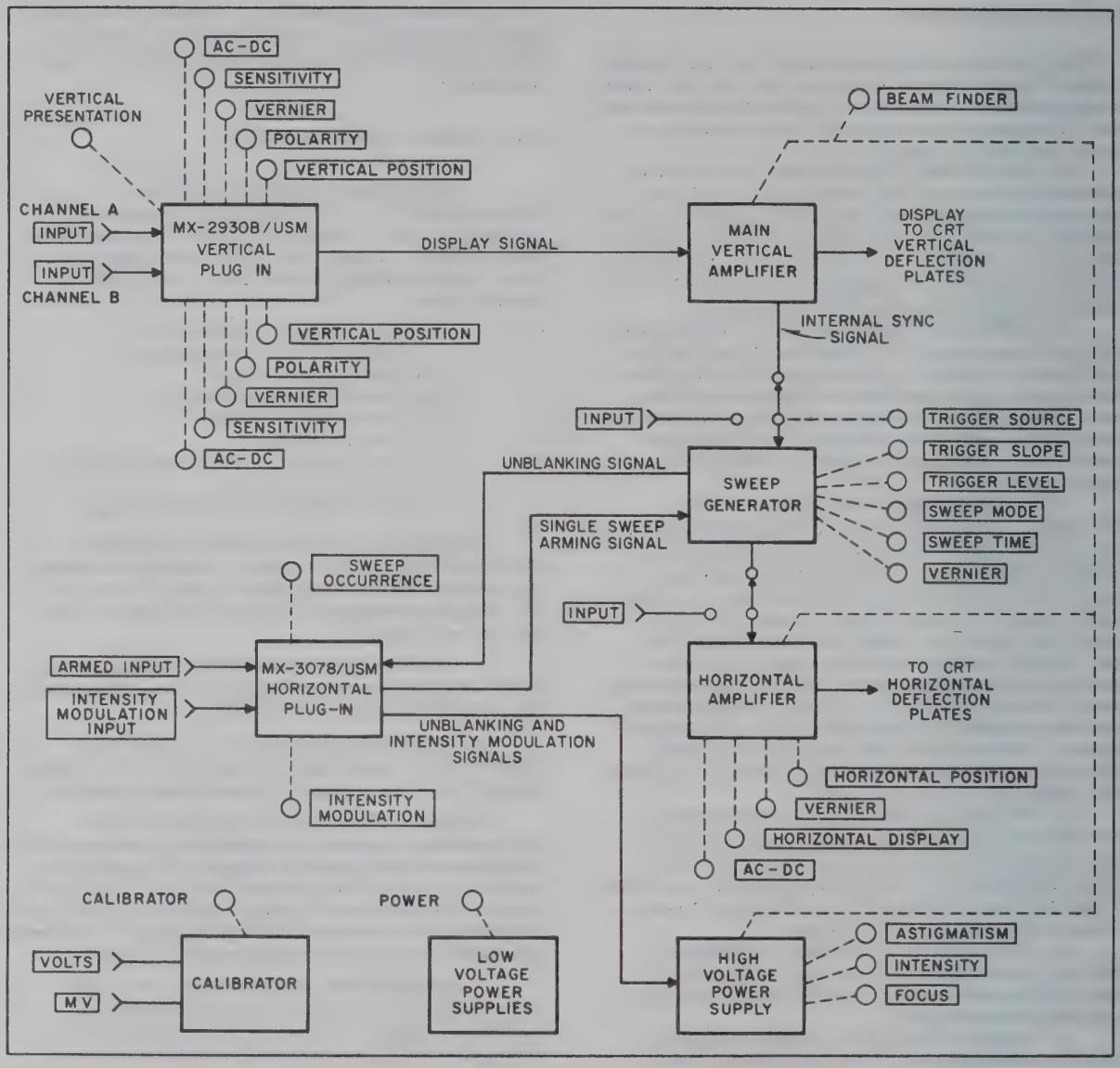

Figure 4-1. Overall Functional Block Diagram

h. MX-3078/USM HORIZONTAL PLUG-IN. — The horizontal plug-in unit makes provision for single-sweep operation and for external intensity modulation.

i. MX-2930B/USM VERTICAL PLUG-IN. — This Dual Trace Preamplifier plug-in unit receives the two separate vertical input signals and provides separate attenuation or preamplification as required, with separate sensitivity, positioning, and polarity controls for each channel. This plug-in unit can provide for the following display modes: one signal only, two signals displayed on alternate sweeps, two signals chopped for display on the same sweep, or a difference signal resulting from the subtraction of two signals. In any of these modes, after making the appropriate signal combination, the unit converts the signal into balanced form and applies it to the input of the main vertical amplifier.

j. CALIBRATOR CIRCUIT. — The calibrator circuit generates a 1-kilocycle square wave for checking the calibration of the vertical and horizontal amplifiers and for compensating for test prods.

4-3. OVERALL OSCILLOSCOPE TROUBLE SHOOTING

Before attempting any trouble-shooting procedure, first make an overall preliminary check of the equipment. Look for external defects such as a dirty filter, broken or loose controls, damaged CRT or graticule, and damaged input connectors. Then remove the cabinet following the directions in paragraph 5-2b, and with power removed, check for broken or bulging components, loose tubes, and frayed wiring. If this check does not reveal any fault, proceed with the following tests.

a. TEST EQUIPMENT AND SPECIAL TOOLS. Test equipment required for trouble shooting is listed in table 4-1. No special tools are required.

b. TROUBLE-SHOOTING PROCEDURE. A procedure for trouble-shooting the over-all oscilloscope is given in table 4-2. This procedure utilizes CRT presentations in response to particular control settings as a means of localizing trouble. Where improper presentations are obtained, table 4-2 directs the technician to a probable circuit or section of the oscilloscope which deserves a more detailed check. Further checking can then be performed by referring to the trouble-shooting text and servicing block diagram for the circuit concerned in this section of the manual, where test voltages and other trouble-shooting data are presented. Test voltages are also given on the schematic diagrams in Section 5.

c. SERVICING BLOCK DIAGRAM. A servicing block diagram for the over-all oscilloscope is shown in figure 4-2. This diagram provides an alternate means of trouble-shooting by measuring waveforms at various test points as shown. Physical locations of the test points referenced in all servicing block diagrams and schematics are shown in figures 4-14 through 4-22.

TABLE 4-1. TEST EQUIPMENT REQUIRED FOR TROUBLE SHOOTING

DESIGNATION	NAME
AN/USM-98	DC Voltmeter
AN/USM-116	High-Voltage Voltmeter
ME-6/U	AC Voltmeter
AN/URM-90	Q Meter
AN/USM-108	Time-Mark Generator
Model 107	Square Wave Generator (Tektronix)
AN/USM-140B with AM-3567/USM	Oscilloscope with High-Gain Differential Amplifier Plug-In

NOTE: See table 1-2 for full description.

CAUTION

If any tubes are replaced as a part of trouble shooting, circuit adjustments may be required before the oscilloscope can be operated. Refer to table 3-4 for a complete listing of tubes and the adjustments required when certain tubes are replaced. Tube locations are shown in figure 5-6.

TABLE 4-2. OVER-ALL OSCILLOSCOPE TROUBLE SHOOTING

STEP	ACTION	RESULTS	NEXT STEP
1	Connect oscilloscope to power source and turn the POWER switch ON.	POWER ON indicator lights and fan operates.	4
		POWER ON indicator lights and fan doesn't operate.	2
		If both POWER ON indicator and fan don't operate, check line fuses F401 and F402, the power cable, and the power switch.	
2	Check overheat indicator behind vertical plug-in unit.	If indicator is on, thermal relay has turned power off. Remove the cause of overheating.	
		Indicator light is off.	3
3	Check ±6.3 volts supply fuse F406 behind vertical plug-in unit.	If fuse F406 is good, check the fan.	
		If fuse is faulty, replace F406, and then refer to the trouble-shooting procedures for the ±6.3 volt supply in the low-voltage power supply.	
4	Set the INTENSITY FOCUS, ASTIGMATISM controls for a clear bright spot or trace. Use the BEAM FINDER HORIZONTAL and VERTICAL POSITION controls to center the trace.	Clear bright trace appears on screen.	5
		Blurred spot appears when BEAM FINDER pressed but can't be centered. Note whether offset is vertical or horizontal, then refer to the trouble-shooting procedures for the vertical or horizontal amplifiers.	
		If trace appears only when the BEAM FINDER is pressed and the INTENSITY set fully clockwise, check the V107 circuit in the sweep generator.	
		If nothing appears on the CRT screen with the BEAM FINDER pressed and the INTENSITY set fully clockwise, refer to the low- and high-voltage power supply trouble-shooting procedures. Also check the output stages of the vertical and horizontal amplifiers, or the CRT.	

TABLE 4-2. (Continued)

STEP	ACTION	RESULTS	NEXT STEP
5	Set Channel A SENSITIVITY to .02, CALIBRATOR to 100, SWEEP TIME to .5 MILLISECONDS/CM, and the TRIGGER SOURCE to INT. Connect CALIBRATOR MV OUTPUT to the Channel A INPUT. Set the SWEEP MODE to FREE RUN then to PRESET. Repeat for Channel B.	Square wave appears on CRT on both free-running and preset sweep.	6
		If only one channel of dual channel amplifier functions normally, check faulty channel.	
		If little or no deflection from either channel of dual channel amplifier, refer to trouble-shooting procedures for main vertical amplifier, dual channel plug-in unit, and calibrator.	
		If presentation is unstable or present only with SWEEP MODE set to FREE RUN, check the trigger circuits, including V3, V4, and V5 in the main vertical amplifier, and V101 and V103 in the sweep generator.	
		If sweep appears far out of calibration, check sweep calibration or calibrator frequenty.	
		If both vertical sensitivity and sweep appear far out of calibration, check all DC supply voltages.	
6	Leave control settings and connections as in step 5 above, except set Vertical Presentation Switch to CHOPPED and then to ALTERNATE.	Dual channel presentation on CRT. Normal operation on steps 5 and 6 indicates all major circuits are operating. Rotate switches and controls to check all possibilities.	
		If dual channel presentation occurs on CHOPPED only, check V507 circuit in dual channel plug-in unit.	
7	Disconnect dual trace amplifier by sliding it partially out of oscilloscope.	If sweep is approximately centered vertically ±2 cm, check the dual channel plug-in unit.	
		If sweep remains vertically offset, check the main vertical amplifier.	

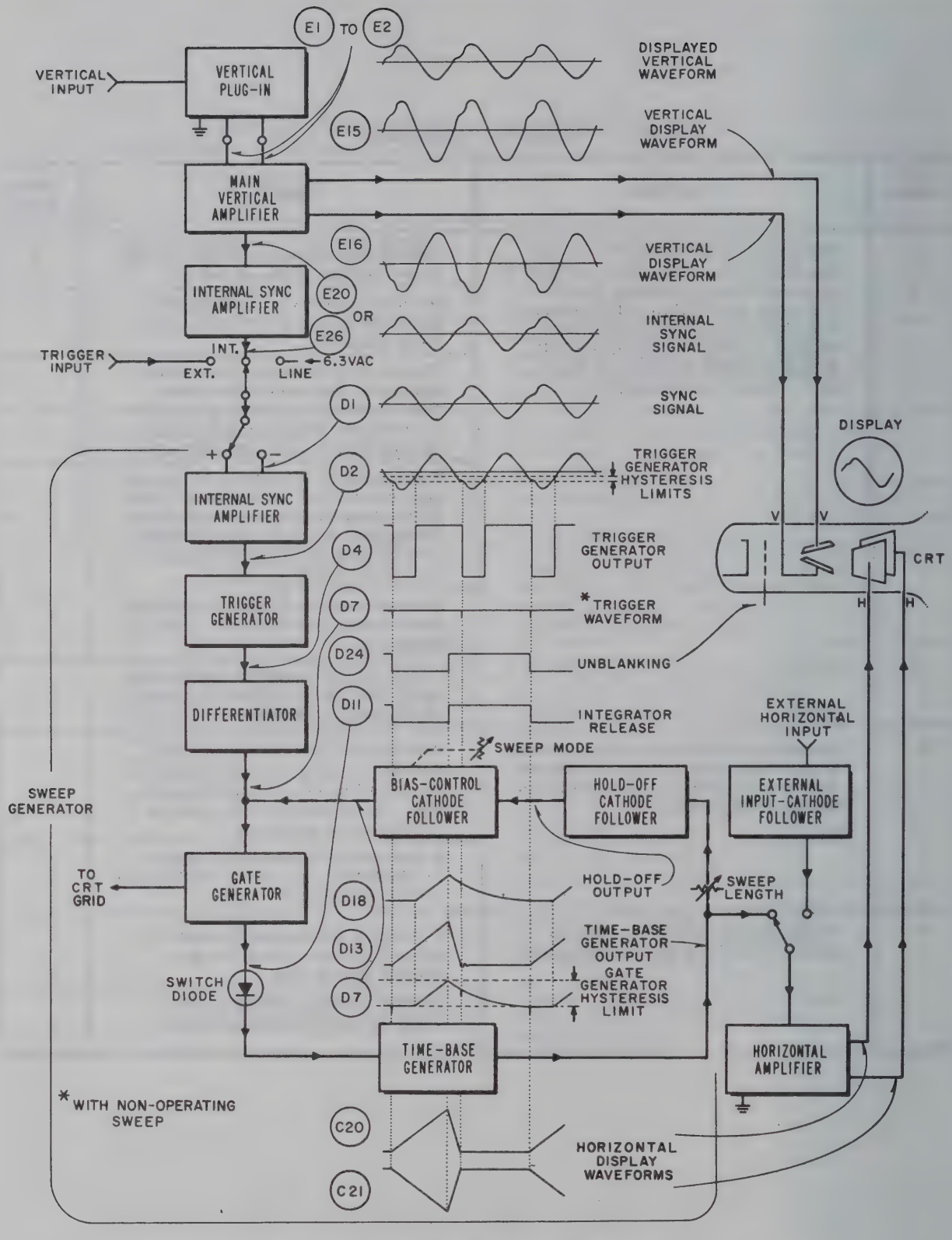

Figure 4-2. Overall Servicing Block Diagram

4-4. LOW-VOLTAGE POWER SUPPLY.

a. LOW-VOLTAGE POWER SUPPLY FUNCTIONAL DESCRIPTION. The low-voltage power supply section is a group of regulated DC supplies consisting of four voltageregulator circuits on one etched circuit assembly (A402) which are powered by four sets of solid-state rectifiers on a separate etched circuit assembly (A401). The Low-Voltage Power Supply Functional and Servicing Block Diagram, Figure 4-3, shows the functional relationship of all circuits in the low-voltage power supply and gives test points and voltages as an aid in trouble shooting. The four regulator circuits supply 12.6 volts, -100 volts, +110 volts, and +260 volts. The output of the +260 volt regulator is connected in series with the output of the +110 volt regulator in order to supply +370 volts. Each supply has an adjustment potentiometer to set its output voltage accurately; however, the -100 volt supply must be set first as its output voltage is used as a reference voltage for the +110 and +370 volt supplies and as an operating voltage in the 12.6 volt supply. The -100 volt supply uses a type 5651 gas regulator tube for its reference voltage; the 12.6 volt supply uses a breakdown diode to supply its reference voltage.

All four regulators operate in the same manner. In each regulator, a series regulator transistor (such as Q413 in the -100 volt supply) acts as an adjustable resistance in series with the load. A comparison amplifier (such as Q410 and Q411 in the -100 volt supply) compares a sample of the regulator output voltage (obtained from R450 and R451 in the -100 volt supply) against a stable reference voltage (obtained from V401 in the -100 volt supply). Any DC shift or AC ripple in the output voltage is amplified and applied to the base of the series regulator transistor. The signal is applied to the base with the proper polarity and amplitude to instantly adjust the resistance of the series element to counteract the initial change in output voltage and hold the output constant.

The 12.6 volt supply provides DC current for all tube heaters. The supply is ungrounded, and the heaters are connected in two equal-current parallel strings. The two strings are connected in series, the mid point is grounded, and the ends are connected across the 12.6 volt supply. Correct voltage adjustment consists of setting the 12.6 volts exactly and making sure that the voltages across the two strings are equal to within ±0.2 volts. A greater inequality means that some tube heater is open or shorted, or that an improper type of tube has been installed.

b. LOW-VOLTAGE POWER SUPPLY TROUBLE SHOOTING. Trouble symptoms in any of the low-voltage power supplies can be divided into four classes: (1) no output; (2) high or low output voltage that cannot be adjusted to proper value; (3) output voltage that does not remain constant as the line voltage is varied ±10% from 115 volts; and (4) a ripple level on the output that is greater than specified. Table 4-3 is a trouble-shooting chart for the low-voltage power supply. The step-by-step procedure given in table 4-3 is based on the trouble shooting techniques discussed below.

Since the four regulator circuits are interdependent, the first step in trouble shooting is to determine which supply is faulty, and the first supply to check is the -100 volt supply, since it serves as a reference for the other supplies. This is done by measuring the -100 volt supply first to be sure it operates properly, and then proceeding with the 12.6 volt supply, +110 volt supply and the +370 volt supply in that order. First measure the DC output voltage of the regulator under test, then adjust the line voltage ±10% while making the same measurement, to assure that the regulator operates properly when exposed to line voltage variations. Next measure the ripple level on the output of the regulator (with an oscilloscope), and then adjust the line voltage ±10% while repeating the same measurement. These measurements will identify the trouble symptom; and the trouble can be further localized by following subsequent steps of the trouble-shooting chart.

The cause of the symptoms of high and low output voltage and poor regulation are most often located by measuring the DC voltages at the transistor elements and comparing them with the voltages given on the block diagram (figure 4-3) and the schematic diagram (figure 5-44). Because of the large degree of degenerative feedback in each regulator circuit, some trouble symptoms may be difficult to isolate. For such cases, an additional set of voltages is given in parentheses on both the block and schematic diagrams. These voltages are taken with the feedback loop opened in the one supply being measured. The feedback loop in each regulator is opened by disconnecting the lead from the regulator circuit on the etched board to the base of the associated transistor mounted on the fan shroud as specified in the block and schematic diagram notes. The leads to the transistors mounted on the fan shroud are shown in detail in figure 4-20. Within each supply, the leads connect as follows: to test point A29 in the 12.6 volt supply, A9 in the -100 volt supply, A16 in the +110 volt supply, and A22 in the +370 volt supply.

To better understand the symptom of high ripple level in the output voltage of a power supply regulator, consider that the complete circuits consist of the DC power source (rectifiers and filter), complete regulator circuit, and the load. The ripple level across the load is equal to the ripple level across the DC power source minus the ripple level across the series regulator. The ripple across the series regulator is a function of the DC gain of the regulator amplifier. The ripple level across the DC power source is a function of the line voltage, the filter capacity, and the inductance that follows the rectifiers. An increase in ripple can be caused by a loss in gain in the regulator amplifier (which would also cause a loss of DC regulation), or it could be caused by a loss in capacity or inductance in the input filter (which may not be accompanied by a loss of DC regulation), or it may be caused by a large undesired increase in load current resulting from a short circuit. Ripple voltage measurement tests are included in the trouble-shooting chart, table 4-3, and are also indicated in tabular form, keyed to test points, on both the block and schematic diagrams. Test point locations are shown in figure 4-14.

USEFUL ILLUSTRATIONS OF THE LOW-VOLTAGE POWER SUPPLY

Illustration	Figure No.	Page No.	Illustration	Figure No.	Page No.
Block Diagram	4-3	4-13, 4-14	Location of Parts	4-20	4-53
Location of Test Points	4-14	4-47		5-28	5-46
				5-29	5-47, 5-48
			Schematic Diagram	5-44	5-73, 5-74

TABLE 4-3. LOW-VOLTAGE POWER SUPPLY TROUBLE SHOOTING

STEP	ACTION	RESULTS	NEXT STEP
1	Measure the DC voltages and AC ripple (peak-to-peak amplitude and frequency) at the supply outputs (test points A1 through A5) with the line voltage at 115 volts, 103 volts, and 127 volts.	One or more incorrect DC voltages which cannot be adjusted to correct value	2
		DC voltages good, but excessive ripple present on one or more supplies	3
2	Measure DC voltage at:		
	A1	Not +6.3 volts	4
	A2	Not -6.3 volts	4
	A3	Not -100 volts	14
	A4	Not +110 volts	23
	A5	Not +370 volts	32
3	Set SWEEP MODE just out of PRESET. Measure peak-to-peak ripple between:		
	*A1-A2 (±6.3V)	More than about 2.5 mv peak-to-peak	11
	A3-GND (-100V)	More than about 2 mv peak-to-peak	20
	A4-GND (+110V)	More than about 4.5 mv peak-to-peak	29
	*A4-A5 (+370V)	More than about 7 mv peak-to-peak	37
	*Differential oscilloscope (AN/USM-140B with AM-3567/USM plug-in) required for these measurements.		
	±6.3 VOLT SUPPLY		
4	Check fuse F406 and replace if faulty.	Voltages at A1 and A2 return to ±6.3 volts	1
		If replacement fuse blows, check fan motor and check for short between +6.3 and -6.3 busses.	
		Voltage between A1 and A2 is correct (12.6 volts) but is not approximately balanced to ground	5
		Fuse not faulty	6
5	Measure DC voltage between test points A2 and H1 (filament circuit) and between A3 and H2.	Voltage correct (about 0.04 volt)	10
		Voltage incorrect	6

TABLE 4-3. (Continued)

STEP	ACTION	RESULTS	NEXT STEP
6	Measure DC voltage between test points A1 and A30.	Voltage correct (about 18 volts)	7
		If voltage is not about 18 volts, check CR414, CR415, L406, C425 or ±6.3 volt supply load.	
7	Pull off base lead of Q416 and measure DC voltage at test points A1 and A2.	Voltages correct (A1 = +5.5 volts; A2 = -5.5 volts)	8
		Voltages incorrect	9
8	With Q416 base lead still off, measure DC voltage at test point A29.	If voltage is correct (about -12.6 volts, check Q415.	
		If voltage is incorrect, check Q414.	
9	With Q416 base lead still off, measure DC voltage at test point A30.	If voltage is correct (about -12.5 volts), check CR414 and CR416.	
		If voltage is incorrect, check Q416 and Q417.	
10	Check voltage drops between test points A2/A3 and all H test points shown on filament schematic diagram.	Incorrect voltages will point to group of tubes causing unbalance. Replace tubes to correct unbalance.	
11	Measure AC voltage between test points A30 and A1 with differential oscilloscope (AN/USM-140B with AM-3567/USM Plug-In).	Peak-to-peak voltage is less than about 1.2 volts	12
		If ripple is greater than about 1.2 volts, and frequency is 60 cps, check CR414 and CR415.	
		If ripple is high and 120 cps, check C425, L406, CR414, CR415, or load on ±6.3 volt supply.	
12	Measure AC voltage between test points A27 and A28.	Peak-to-peak voltage is at least 30 times that measured in step 3 (typically 75 mv)	13
		If AC voltage is much less than 30 times that measured in step 3, check Q414 and CR416.	
13	Measure AC voltage between test points A28 and A30.	If AC voltage is much less than 16 times that measured in step 12 (typically 1.2 volts), check Q415, Q416, and Q417.	
	-100 VOLT SUPPLY		
14	Check fuse F405 and replace if faulty.	Voltage at A3 returns to -100 volts	1
		Replacement fuse blows	15
		Fuse not faulty	17
15	Turn instrument off. Disconnect white/violet (or white/black) lead from test point A3. Measure resistance to ground from test point A3 and from this lead.	If resistance at A3 is less than about 13K ohms, check load on -100V supply for shorts.	
		If resistance at white/violet (or white/black) lead is less than about 2000 ohms, check for short within the -100V supply.	
		Both resistances normal	16

TABLE 4-3. (Continued)

STEP	ACTION	RESULTS	NEXT STEP
16	Connect dummy loads to -100 volt, +110 volt, and +370 volt supplies as follows: connect a resistance of 165 ohms (75 watts) between ground and white/violet (or white/black) lead removed from test point A3. Disconnect white/orange (or orange/white) lead from test point A4, and connect a resistance of 125 ohms (150 watts) between ground and white/orange (or orange/white) lead. Disconnect white/red (or red/orange) lead from test point A5, and connect a resistance of 1160 ohms (150 watts) between ground and white/red (or red/orange) lead. Turn instrument ON.	If voltage at test point A3 returns to -100 volts, check load for shorts.	
		If F405 blows again, check for short in -100 volt supply.	
17	Pull off base lead of Q413 and measure DC voltage at test point A3.	Voltage correct (about -52 volts)	18
		Voltage incorrect	19
18	With Q413 base lead still off, measure DC voltage at test point A8.	If voltage is correct (about -57 volts), check Q412.	
		If voltage is incorrect, check Q410 and Q411.	
19	With Q413 base lead still off, measure DC voltage at test point A11.	If voltage is correct (about -143 volts), check diodes CR409 through CR412, or -100 volt supply load.	
		If voltage is incorrect, check Q413 and Q419.	
20	Measure AC voltage between test point A11 and ground.	Peak-to-peak voltage is less than about 8 volts.	21
		If ripple is greater than about 8 volts and frequency is 60 cps, check diodes CR409 through CR412.	
		If ripple is high and 120 cps, check C416, C420, L404, L405, CR409 through CR412, or load on - 100V supply.	
21	Measure AC voltage between test points A6 and A9 with differential oscilloscope (AN/USM-140B with AM-3567/USM Plug-In).	Peak-to-peak voltage is at least 1.5 times that measured in step 3 (typically 3 mv)	22
		If AC voltage is much less than 1.5 times that measured in step 3, check Q410, Q411, and Q412.	
22	Measure AC voltage between test points A9 and A11.	If AC voltage is much less than 2500 times that measured in step 21 (typically 8 volts), check Q413 and Q419.	
	+110 VOLT SUPPLY		
23	Check fuse F404 and replace if faulty.	Voltage at A4 returns to normal	1
		Replacement fuse blows	24
		Fuse not faulty	26

TABLE 4-3. (Continued)

STEP	ACTION	RESULTS	NEXT STEP
24	Turn instrument off. Disconnect white/orange (or orange/white) lead from test point A4. Measure resistance to ground from test point A4 and from white/orange lead.	If resistance at A4 is less than about 55K ohms, check load on +110 volt supply for shorts.	
		If resistance at white/orange (or orange/white) lead is less than about 3000 ohms, check for short within the +110 volt supply.	
		Both resistances normal	25
25	Connect dummy loads to +110 volt, -100 volt, and +370 volt supplies as follows: connect resistance of 125 ohms (150 watts) between ground and white/orange (or orange/white) lead removed from test point A4. Disconnect white/violet (or white/black) lead from test point A3, and connect resistance of 165 ohms (75 watts) between ground and white/violet (or white/black) lead. Disconnect white/red (or red/orange) lead from test point A5, and connect resistance of 1160 ohms (150 watts) between ground and white/red (or red/orange) lead.	If voltage at A4 returns to +110 volts, check load for shorts.	
		If F404 blows again, check for short in +110 volt supply.	
26	Pull off base lead of Q409 and measure DC voltage at test point A4.	Voltage correct (about +80 volts)	27
		Voltage incorrect	28
27	With Q409 base lead still off, measure DC voltage at test point A15.	If voltage is correct (about -10 volts, check Q408.	
		If voltage is incorrect, check Q406 and Q407.	
28	With Q409 base lead still off, measure DC voltage at test point A18.	If voltage is correct (about -16 volts), check diodes CR405 through CR408, or +110 volt supply load.	
		If voltage is incorrect, check Q418.	
29	Measure AC voltage between test points A18 and A4 with differential oscilloscope (AN/USM-140B with AM-3567/USM Plug-In).	Peak-to-peak voltage is less than about 11 volts	30
		If ripple is greater than about 11 volts, and frequency is 60 cps, check diodes CR405 through CR408.	
		If ripple is high and 120 cps, check C408, C411, L402, L403, CR405 through CR408, or load on +110 volt supply.	
30	Measure AC voltage between test points A13 and A16.	Peak-to-peak voltage is at least 4 times that measured in step 3 (typically 20 mv)	31
		If AC voltage is much less than 4 times that measured in step 3, check Q406, Q407, and Q408.	
31	Measure AC voltage vetween test points A16 and A18.	If AC voltage is much less than 500 times that measured in step 30 (typically 10 volts), check Q409 and Q418.	

TABLE 4-3. (Continued)

STEP	ACTION	RESULTS	NEXT STEP
		+370 VOLT SUPPLY	
32	Check fuse F403 and replace if faulty.	Voltage at A5 returns to normal	1
		Replacement fuse blows	33
		Fuse not faulty	35
33	Turn instrument off. Disconnect white/red (or red/orange) lead from test point A5. Measure resistance to ground from test point A5 and from white/red (or red/orange) lead.	If resistance at A5 is less than about 17K ohms, check load on +370 volt supply for shorts.	
		If resistance at white/red (or red/orange) lead is less than about 13K ohms, check for short within the +370 volt supply.	
		Both resistances normal	34
34	Connect dummy loads to +370 volt, -100 volt, and +110 volt supplies as follows: connect resistance of 1160 ohms (150 watts) between ground and white/red (or red/orange) lead removed from test point A5. Disconnect white/violet (or white/black) lead from test point A3, and connect resistance of 165 ohms (75 watts) between ground and white/violet (or white/black) lead. Disconnect white/orange (or orange/white) lead from test point A4, and connect resistance of 125 ohms (150 watts) between ground and white/orange (or orange/white) lead.	If voltage at A5 returns to +370 volts, check load for shorts.	
		If F403 blows again, check for short in +370 volt supply.	
35	Pull off base lead of Q405 and measure DC voltage at test point A5.	If voltage is correct (about +320 volts), check Q401 or Q402.	
		Voltage incorrect	36
36	With Q405 base lead still off, measure DC voltage at test point A25.	If voltage is correct (about -15 volts), check diodes CR401 through CR404, or +370 volt supply load.	
		If voltage is incorrect, check Q403, Q404, and Q405.	
37	Measure AC voltage between test points A25 and A5 with differential oscilloscope (AN/USM-140B with AM-3567/USM Plug-In).	Peak-to-peak voltage is less than about 11 volts.	38
		If ripple is greater than about 11 volts, and frequency is 60 cps, check diodes CR401 through CR404.	
		If ripple is high and 120 cps, check C401, C403, CR401 through CR404, or load on +370 volt supply.	
38	Measure AC voltage between test points A20 and A22.	Peak-to-peak voltage is at least 0.8 times that measured in step 3 (typically 10 mv)	39
		If AC voltage is much less than 0.8 times that measured in step 3, check Q401 and Q402.	
39	Measure AC voltage between test points A22 and A25.	If AC voltage is much less than 1000 times that measured in step 38 (typically 11 volts), check Q403, Q404, and Q405.	

4-5. HIGH-VOLTAGE POWER SUPPLY.

a. HIGH-VOLTAGE POWER SUPPLY FUNCTIONAL DESCRIPTION. The high-voltage power supply consists of a single 50-kilocycle oscillator supplying power to three different sets of rectifiers: (1) +8500 volts for the CRT post accelerator; (2) -1500 volts for the CRT cathode; and (3) an additional -1600 volts for the CRT control grid. The reason for the additional -1600 volt supply is to permit this supply to be varied for intensity control and intensity modulation without affecting the voltage applied to the cathode. The High-Voltage Power Supply Functional and Servicing Block Diagram, figure 4-4, shows the functional relationship of all circuits in the high-voltage power supply, and gives test points and voltages as an aid in trouble shooting.

The amplitude of the 50-kc oscillator is regulated by feedback taken from the -1500 volt CRT cathode voltage. A sample of the -1500 volts is fed through a voltage divider and the H. V. ADJ potentiometer (R321) to the grid of the regulator amplifier, whose cathode is grounded. Any shift in the -1500 volts is amplified in both V301A and B and applied to the screen grid of the oscillator tube V304. If the -1500 volt output tends to decrease (vary in a positive direction), the voltage applied to the oscillator grid also goes positive and increases the oscillation amplitude. If the -1500 volts should tend to increase, the oscillation amplitude would be decreased by the applied screen voltage, and thus the -1500 volts is held constant in either case. A shift in the +8500 and -1600 volt supplies is not sensed by the regulator amplifier unless that shift also causes a shift in the -1500 volt supply. The +8500 volts is obtained by voltage doubling in V308 and V309. During the negative half cycle at terminal 1 on T301, V309 conducts and charges C305 to about 4300 volts. During the positive half cycle V308 conducts with the +4300 volts charge in series with (adding to) the transformer voltage. C306 and C315 bypass the 50-kc ripple.

The high-voltage oscillator is located on etched circuit A301 mounted under a cover on the upper left side of the oscilloscope chassis as shown in figure 5-9. When the cover is removed, voltages in excess of 8500 volts are exposed.

b. HIGH-VOLTAGE POWER SUPPLY TROUBLE SHOOTING. Malfunctions in the high-voltage power supply fall into three classes: (1) no voltage, or incorrect voltage that cannot be adjusted, (2) output voltage which does not remain constant when the intensity control is adjusted over its full range, and (3) excessive noise in the output voltage. The first step in trouble shooting the high-voltage supply is to classify the trouble symptom by observation of the CRT trace. No voltage, or high or low voltage are usually identified by such symptoms as no spot when the beam finder is pressed, a poorly focused spot, a spot that cannot be turned off, a high or low horizontal and vertical deflection sensitivity. The step-by-step trouble-shooting procedure is given in table 4-4. Trouble-shooting techniques are further discussed below.

Poor regulation of the high voltages is usually identified as such by a change in horizontal and vertical sensitivity as the intensity control is varied over its full range.

Noise in the high-voltage power supply usually appears as undesired intensity modulation of the spot. The usual cause is corona discharge, arcing, or breakdown of capacitors and other dielectrics in the +8500-volt supply components. To locate the source of such a malfunction, first look for signs of arcing while the oscilloscope is operating; darkening the room may help. If no signs of arcing appear, measure the DC voltage at the test points and note any signs of jumpiness. Look for the test point where jumpiness is greatest. If the source of the breakdown still cannot be located, make resistance checks of suspect components or substitute new parts for C305, C306, C315, associated wires, R311, etc.

WARNING

Use great care in making voltage measurements when trouble shooting the high-voltage supply. The high-voltage power supply produces lethal voltages as high as +8500V. Read and understand each step before beginning. Work with one hand only and do not touch exposed wires or terminals with power applied.

USEFUL ILLUSTRATIONS OF THE HIGH-VOLTAGE POWER SUPPLY

Illustration	Figure No.	Page No.
Block Diagram	4-4	4-19, 4-20
Location of Test Points	4-15	4-48
Location of Parts	5-26 5-27	5-43 5-45
Schematic Diagram	5-43	5-71, 5-72

4-6. BEAM FINDER CIRCUIT.

a. BEAM FINDER CIRCUIT FUNCTIONAL DESCRIPTION. The BEAM FINDER pushbutton switch reduces both the horizontal and veritcal amplifier gains and momentarily brightens the CRT display. As a result, any elusive trace is brought to an on-screen position on the CRT and can be located with the regular positioning controls to remain in the center when the BEAM FINDER switch is released.

A simplified schematic of the beam finder circuit is shown in figure 4-5. The connection of the beam finder circuit to the main vertical amplifier is also shown in the functional block diagram of figure 4-8. To reduce the horizontal gain, the switch adds R268 in series with the cathode supply for V204/V205, greatly reducing the current supplied to this stage. Thus, with the BEAM FINDER pushed, the stage gain is low enough to restrict the deflection to within the exposed face of the CRT.

To reduce the vertical gain, the switch adds R88 in series with the cathode supply for V11A/V12B and V11B/V13B. The vertical gain is further reduced by lowering the common cathode voltage for V12A and V13A. A stabilizing resistor, R99, is used

TABLE 4-4. HIGH-VOLTAGE POWER SUPPLY TROUBLE SHOOTING

STEP	ACTION	RESULTS	NEXT STEP
1	Measure DC voltage at supply outputs (test points B1, B2, and B3).	If voltages are correct, check CRT.	
		One or more voltages are incorrect	2
2	Remove CRT socket.	If voltages return to normal, replace CRT.	
		Voltages still incorrect	3
3	Measure DC voltage at test points B1, B2, and B3.	Voltage at B1 incorrect	14
		Voltage at B2 incorrect	13
		Voltage at B3 incorrect	15
		All voltages low	4
		If all voltages high, check V301.	
4	Observe waveform at test point B9.	If indication is normal (50-kc sine wave, indicated on schematic), check rectifiers and load on all three supplies.	
		Waveform incorrect, intermittent, or not present	5
5	Remove rectifiers V308 through V311, and observe waveform at test point B9.	Indication returns to normal	6
		Waveform still incorrect (Replace rectifiers for next step.)	7
6	Replace rectifiers one at a time and recheck waveform at test point B9.	Note which supply stops or causes incorrect oscillation. Check components including transformer T301 for that supply.	
7	Remove V301 and measure DC voltage at test point B8.	Voltage about -47 volts (voltage shown on schematic in parentheses)	11
		Voltage incorrect or intermittent	8
8	Measure DC voltage at test point B9.	Voltage about +366 volts	9
		Voltage incorrect	10
9	Measure DC voltage at test point B7.	If voltage is correct (+180 volts), check V304, T301, or C304.	
		If voltage is incorrect, check R302 and C303.	
10	Measure DC voltage at test point B10.	If voltage is correct (+370 volts), check V304, T301, or C304.	
		If voltage is incorrect, check L301 or +370 volt supply.	
11	Measure DC voltage at test point B5.	Voltage about -43 volts	12
		Voltage incorrect	13
12	Re-install V301 and measure DC voltage at test point B7.	Voltage about +170 volts	13
		If voltage is incorrect, check V301.	
13	Remove V301 and measure DC voltage at test point B2.	Voltage about -1940 volts	14
		Voltage incorrect	16

TABLE 4-4. (Continued)

STEP	ACTION	RESULTS	NEXT STEP
14	Remove V301 and measure DC voltage at test point B1.	Voltage about -1760 volts	15
		If voltage is incorrect, check V310, C307, and C311.	
15	Remove V301 and measure DC voltage at test point B3.	If voltage is correct (10,100 volts), check CRT and voltages at CRT elements.	
		If voltage is incorrect, check V308 and V309.	
16	Remove V301 and measure DC voltage at test point B2.	If voltage is correct (-1940 volts), check V311 and C308.	
		If voltage reading of -1940 volts is not obtained, check V311, C308, and T301.	

to keep the plate potential constant for these two tubes. As a result of these conditions, the vertical gain is low enough with the BEAM FINDER switch pressed that the beam cannot be deflected off the CRT face.

In the high-voltage supply, the -1500 volt cathode supply for the CRT is returned to -83 volts instead of to ground when the BEAM FINDER is pressed. This additional negative voltage at the CRT cathode causes the grid to become relatively more positive, and thereby overrides any cut-off bias voltage which may exist between the CRT grid and cathode, producing a brightened, defocused beam.

b. BEAM FINDER CIRCUIT TROUBLE SHOOTING. Trouble shooting the beam finder circuit assumes that the high-voltage supply, the main vertical amplifier, and the horizontal amplifier are known to be operating satisfactorily. Trouble symptoms in the beam finder circuit fall into four classes: (1) spot cannot be centered horizontally, (2) spot cannot be centered vertically, (3) spot does not brighten, or (4) no spot.

The first step in trouble shooting the beam circuit is to measure the voltage differences given in figure 4-5. These will indicate the general location of the trouble. From the class of trouble and its general location, a logical choice can be made as to the faulty components. Tubes within the suspected circuit should be checked by comparison, and the required adjustments should be made if any tubes are replaced. If the tubes are operating correctly, check the BEAM FINDER switch, S1. With all power removed from the oscilloscope, use an ohmmeter to check continuity of the opened and closed circuits in the four-pole switch. If the switch, its wiring, and all connections are satisfactory, check the passive elements in the suspected circuit.

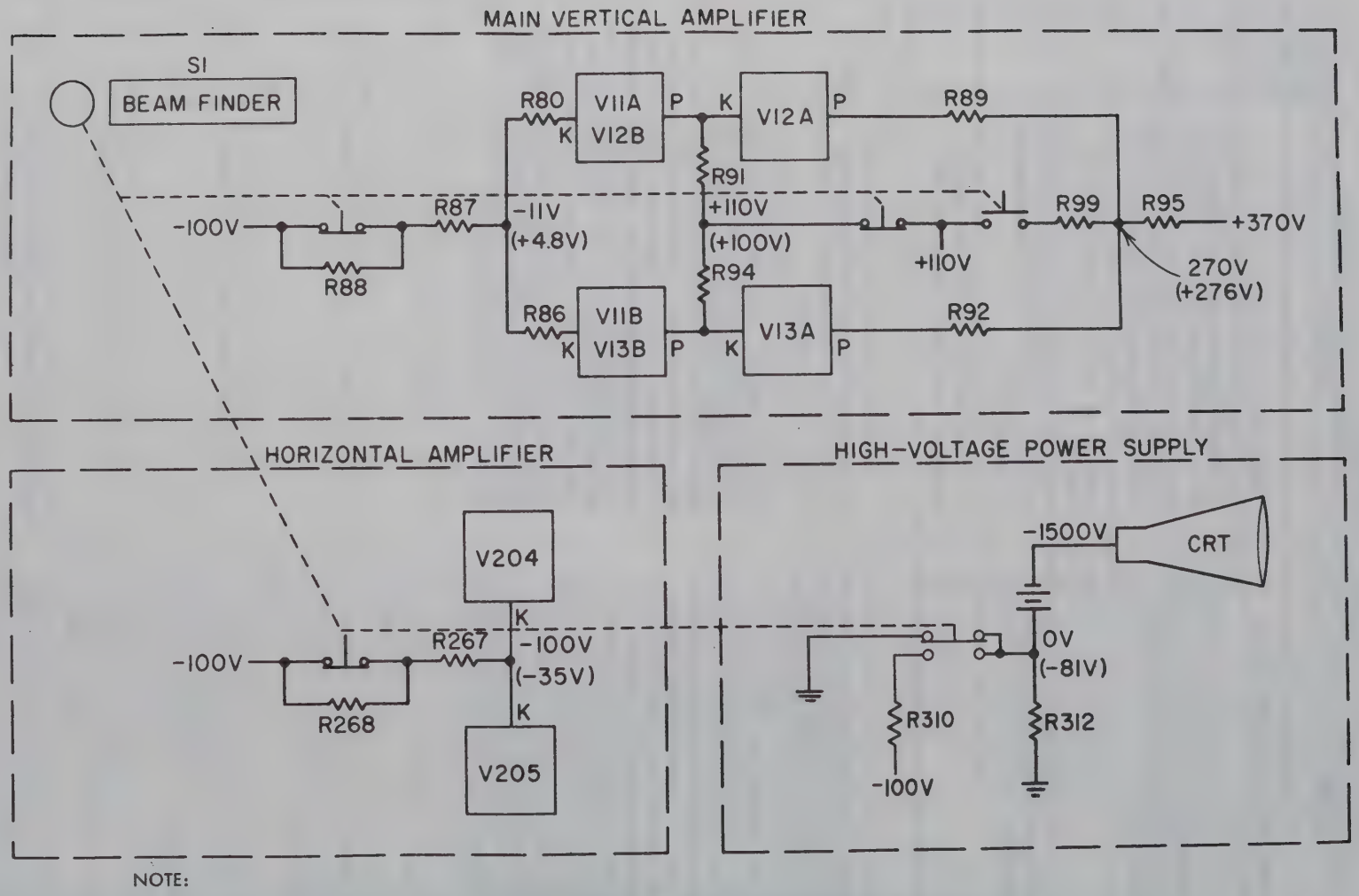

NOTE:

1. DC VOLTAGES MEASURED TO GROUND WITH A VTVM (AN/USM-116 OR EQUIVALENT).
2. VOLTAGES WITHOUT PARENTHESES ARE NORMAL VOLTAGES; VOLTAGES IN PARENTHESES ARE MEASURED WHILE BEAM FINDER SWITCH IS PRESSED.

Figure 4-5. Simplified Schematic, Beam Finder Circuit

4-7. MAIN VERTICAL AMPLIFIER.

a. MAIN VERTICAL AMPLIFIER FUNCTIONAL DESCRIPTION. The main vertical amplifier receives a balanced input signal from the MX-2930B/USM Vertical Plug-In Amplifier, amplifies this signal, and drives the CRT deflection plates. The main vertical amplifier consists of two etched circuit assemblies A1 and A2 located on each side of the upper oscilloscope chassis (see figure 5-9). The signal from the input circuit A1 is coupled to the output amplifier A2 through a pair of 0.2 microsecond delay lines DL1 and DL2 located around the fan housing, as shown in figure 5-4. The Main Vertical Amplifier Functional and Servicing Block Diagram is shown in figure 4-8.

Input etched circuit A1 includes a balanced input Cathode Follower V1 followed by a balanced Cascode Amplifier V2 and V3, and a separate four-stage, single-ended amplifier that supplies the internal sync signal to the sweep generator for use in generating an internal sweep trigger. By taking the sync signal from the vertical amplifier ahead of the delay lines, it is possible to start the sweep before the vertical signal that initiated the sync is presented to the CRT. Thus, the vertical signal is automatically synchronized with a horizontal time-variable sweep.

The cascode amplifier is a two-stage amplifier with a conventional grid-coupled input and a grounded-grid output. It is used to obtain the high gain of a pentode and the low noise of a triode. Figure 4-6 shows a simplified schematic of the V2/V3 balanced cascode amplifier circuit. A positive input signal from the input cathode follower is fed to the control grid of V2B. The signal is amplified and the phase is shifted 180°. There is no additional phase shift in the grounded-grid section. The Gain Adj resistor, R13, in the cathode circuit adjusts the gain of the cascode amplifier and sets the overall gain of the main vertical amplifier.

Output amplifier A2 includes an input Cathode Follower V6, a Cascode Amplifier A11, A12, and A13 supplemented by a Constant Current Generator to permit DC coupling between the input and output stages. The Cross-Coupled Cathode Follower (shown in simplified form in figure 4-6) consists of tube V6A and B which provides a high input impedance load to the delay line and a low output impedance to drive the following cascode amplifier. To compensate for the tendency of the load to increase with frequency, the cathode followers are cross-coupled. Cross-coupling places the plate impedance of the opposite side in parallel with the cathode impedance of the first side, thus decreasing it. The cross-coupling capacitors C23 and C24 add this parallel impedance at the high frequencies only.

Constant Current Generator V7 provides a constant direct current through coupling resistors R52 and R68, thus producing a constant DC drop of about 150 volts across each resistor and allowing the following cascode amplifier grids to be operated at near 0 volts. A simplified schematic of this circuit is shown in figure 4-7. There is no significant loss in signal across the voltage-dropping network. R50 and R67 apply a small signal to each grid of V7, thereby maintaining a constant current through the tube as the plate voltage changes through the signal cycle. Capacitors C22 and C25 prevent DC shorting of the voltage drop; inductors L19 and L20 provide series resonance with the input capacity of V11A/B, V12B, and V13B to increase high frequency gain. Resistors R53 and R69 isolate the output capacity of V7 from the grids of V10, V11, V12, and V13. V8 and V9 are safety devices that prevent the voltage applied to the following grids from rising excessively in the event V7 fails or is removed from the socket during operation.

The final Cascode Amplifier uses parallel input triodes to double the gain without increasing the plate capacity in the output. The additional current required by the two parallel triodes is drawn through R91 and R94.

The cathode follower stages of V10A and V10B are used only when a special scanner plug-in unit is installed in place of the MX-3078/USM Auxiliary Plug-In Unit. At other times this stage has no effect on the main vertical amplifier circuit operation.

In the servicing block diagram (figure 4-8) and the schematic diagram for the main vertical amplifier (figure 5-37), the DC voltages shown at the test points are measured with the balanced amplifier stages in exact balance. In practice, various degrees of unbalance are normal. When the vertical position control is adjusted to balance the voltages of a particular stage, the voltages should be within about 10% of those shown and the CRT trace will normally be within 1 centimeter of center. Stage gain measurements are usually made at frequencies between 400 cycles and 20 kilocycles to avoid the loading effect of the test prod. Gain can also be measured at DC, using a DC voltmeter and by adjusting the vertical position control to provide the signal. The DC gain is equal to the AC gain.

b. MAIN VERTICAL AMPLIFIER TROUBLE SHOOTING. Trouble symptoms in the main vertical amplifier fall into four classes: (1) the spot cannot be centered vertically (DC unbalance); (2) high noise level (ripple or microphonics); (3) incorrect midband sensitivity; or (4) poor high-frequency (pulse) response. Three separate procedures are given for trouble shooting these problems in the trouble-shooting chart, table 4-5. The procedure given for trouble shooting for DC unbalance should also be used in trouble shooting for excessive noise level. Before trouble shooting a problem of sensitivity, be sure that the DC balance and the CRT deflection sensitivity are satisfactory (CRT deflection sensitivity can be checked in response to horizontal deflection, indicating that proper high-voltage power supply voltages are applied to the CRT). Since proper pulse (high frequency) response depends upon suitable balance and midband sensitivity, the procedure for trouble shooting high frequency response is presented last in table 4-5, and presumes that the balance and midband sensitivity are properly set. The trouble-shooting techniques upon which the step-by-step procedures of table 4-5 are based are discussed below.

The quickest way to isolate the source of noise or DC unbalance is to connect a jumper across corresponding circuit points on the top and bottom sides of the vertical amplifier. If this eliminates the noise or unbalance the trouble is ahead of the short; if the trouble persists, the source is after the short. The

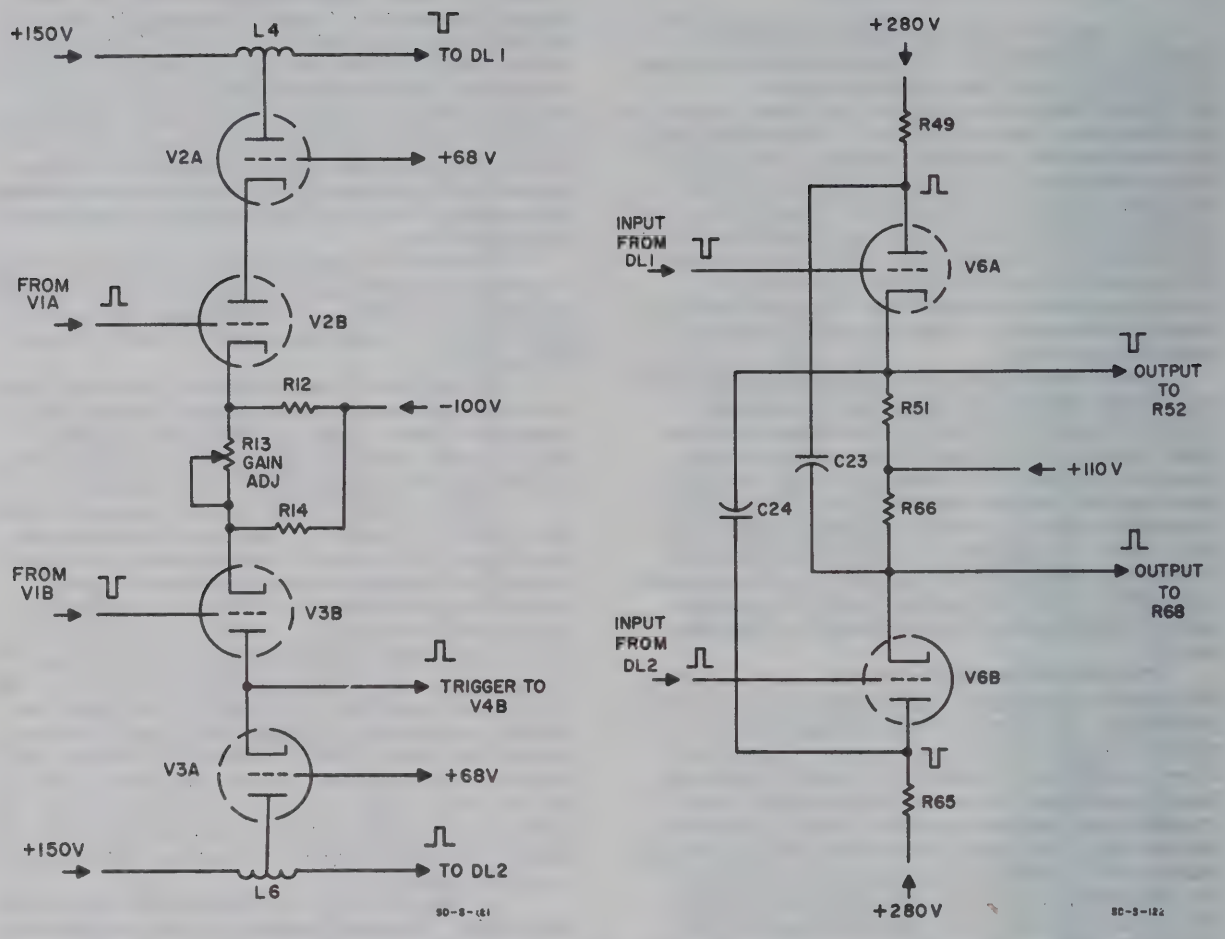

Figure 4-6. Cascode Amplifier/Simplified Schematic Diagram and Cross-Coupled Cathode Follower

noise level in the output, across test points E15 and E16, should not exceed 0.2 volt peak-to-peak. Sharp taps on the rear of the chassis should not produce a spot deflection of more than 5 millimeters.

The trouble-shooting procedure of table 4-5 utilizes this method of a "half-split" sequence, i.e., making the first test midway in the amplifier, the second test midway in the amplifier half found defective by the first test, and so on. After the trouble is isolated to a stage, the faulty part can be located by making DC voltage measurements and comparing them to the voltages given on the servicing block diagram and the schematic diagram.

Insufficient sensitivity (low gain) in the amplifier is usually caused by a weak tube, incorrect heater, or defective plate supply voltage. The method used to isolate the source of low sensitivity is to apply a 400-cycle sine-wave signal directly to the vertical amplifier and then to make the AC measurements as shown on the servicing block diagram, figure 4-8. Again the "half-split" method is used, beginning at the center of the amplifier to determine which half is defective, going to the center of the defective half for the second test, and so on. The AC measurements are made across the two sides of the amplifier to simplify the readings. The measuring instrument used must not shift the vertical position of the trace when it is connected to the circuit. After the stage causing low sensitivity is repaired, adjust the Vert Gain control, R13, to obtain 2.5-centimeters vertical deflection with an 0.5-volt peak-to-peak input.

Before trouble shooting a problem of high frequency response, be sure that the DC balance and midband sensitivity are satisfactory. The test for correct pulse response is to apply a 1-mc square wave of near-perfect shape to the oscilloscope input. If any undershoot or overshoot is observed on the CRT, the most likely cause is a defective tube, lack of proper adjustment following replacement of a tube, or physical damage to the delay lines, their terminations, or any of the series-peaking coils on the vertical amplifier etched circuit assemblies.

USEFUL ILLUSTRATIONS OF THE MAIN VERTICAL AMPLIFIER

Illustration	Figure No.	Page No.
Block Diagram	4-8	4-27, 4-28
Location of Test Points	4-19	4-52
Location of Parts	5-14 5-15	5-31
Schematic Diagram	5-37	5-59, 5-60

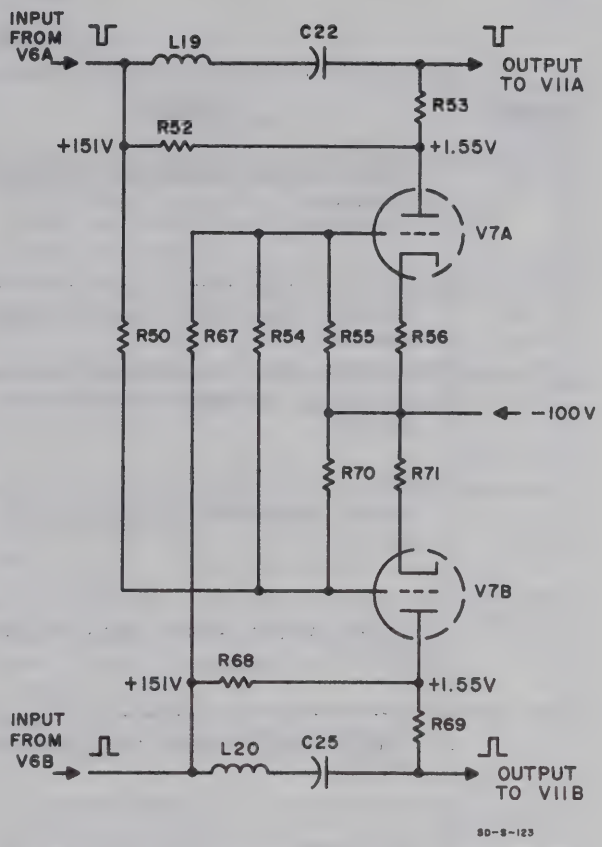

Figure 4-7. Constant Current Generator Simplified Schematic Diagram

TABLE 4-5. MAIN VERTICAL AMPLIFIER TROUBLE SHOOTING

STEP	ACTION	RESULTS	NEXT STEP
	DC UNBALANCE		
1	Remove Dual Channel Vertical Plug-In. Set up controls to get spot or trace on screen.	Trace or spot is within ±2 cm of center	2
		Trace or spot greater than ±2 cm from center	3
2	Insert MX-2930B/USM Dual Channel Vertical Plug-In. Allow to warm up. Set to CHANNEL A and center spot with VERTICAL POSITION control. Repeat for CHANNEL B.	Trace can be centered in both CHANNEL A and CHANNEL B, with positioning controls near center of range. Main vertical and dual channel plug-in operating normally.	
		If trace can't be centered by one or the other or both positioning controls, with control approximately in center of range, refer to Dual Channel Plug-In Trouble Shooting procedure.	
3	Connect jumper between test points E5 and E6.	Trace centers	4
		Trace doesn't center	5

TABLE 4-5. (Continued)

STEP	ACTION	RESULTS	NEXT STEP
4	Connect jumper between test points E3 and E4.	If trace centers, check DC voltages around V1A and V1B.	
		If trace doesn't centér, check DC voltages around V2 and V3.	
5	Connect jumper between test points E11 and E12.	Trace centers	6
		Trace doesn't center	8
6	Connect jumper between test points E9 and E10.	Trace centers	7
		If trace doesn't center, check DC voltages around V7A/B.	
7	Connect jumper between test points E7 and E8.	If trace centers, check delay line.	
		If trace doesn't center, check DC voltages around V6A/B.	
8	Connect jumper between test points E13 and E14.	If trace centers, check DC voltages around V11A/B, V12B, V13B.	
		Trace doesn't center	9
9	Connect jumper between test points E15 and E16.	If trace centers, check DC voltages around V12A and V13A.	
		If trace doesn't center, check CRT and connections to CRT.	
	SENSITIVITY		
10	Set up equipment as in table 5-7, step 10.	If peak-to-peak deflection is 4 cm ±0.2 cm, main vertical sensitivity is correctly set.	
		Peak-to-peak deflection is not 4 cm ±0.2 cm	11
11	Adjust Vert Gain R13 for peak-to-peak deflection of 4 cm ±0.2 cm.	If gain can be adjusted to correct sensitivity, main vertical amplifier is operating correctly.	
		R13 can't adjust deflection to 4 cm	12
12	Adjust R13 for maximum gain. Set CALIBRATOR signal to 0.5 volts peak-to-peak.	If vertical deflection is greater than 2.5 cm (peak-to-peak), main vertical amplifier is operating correctly. Repeat step 11.	
		Less than 2.5 cm deflection	13
13	Measure AC voltage between test points E5 and E6 with differential oscilloscope (AN/USM-140B with AM-3567/USM Plug-In).	AC voltage approximately 2.9 volts peak-to-peak	16
		AC voltage less than about 2.9 volts peak-to-peak	14
14	Measure AC voltage between test points E3 and E4.	If AC voltage is about 0.48 volt peak-to-peak, measure DC voltages around V2A/B and V3A/B, including heaters.	
		AC voltage low (less than about 0.48 volt peak-to-peak)	15

TABLE 4-5. (Continued)

STEP	ACTION	RESULTS	NEXT STEP
15	Measure AC voltage between test points E1 and E2.	If AC voltage is about 0.5 volt peak-to-peak, measure DC voltages around V1A/B including heaters.	
		If AC voltage is low, check instrument set up.	
16	Measure AC voltage between test points E11 and E12.	AC voltage about 2.46 volts peak-to-peak	19
		AC voltage low (less than about 2.46 volts peak-to-peak)	17
17	Measure AC voltage between test points E9 and E10.	If AC voltage is about 2.54 volts peak-to-peak, check DC voltage around V7A/B, including heaters.	
		AC voltage low (less than about 2.54 volts peak-to-peak)	18
18	Measure AC voltage between test points E7 and E8.	If AC voltage is about 2.8 volts peak-to-peak, check DC voltages around V6A/B, including heaters.	
		If AC voltage is low (less than about 2.8 volts peak-to-peak), check delay line.	
19	Measure AC voltage between test points E13 and E14.	AC voltage about 0.84 volt peak-to-peak	20
		If AC voltage is low (less than about 0.84 volt peak-to-peak), check DC voltages around V11A/B, V12B, and V13B.	
20	Measure AC voltage between test points E15 and E16.	If AC voltage is about 19.2 volts peak-to-peak, check connections to CRT, high-voltage power supply, and CRT.	
		If AC voltage is low (less than about 19.2 volts peak-to-peak), check DC voltages around V12A and V13A, including heaters.	
	HIGH FREQUENCY RESPONSE		
21	Check main vertical amplifier rise time as in table 5-7, step 12.	If rise time (10-90%) is 11 nanoseconds or less, high frequency response is correct.	
		Rise time greater than 11 nanoseconds	22
22	Check DC unbalance by removing all connections from J1 (vertical plug-in connector).	Spot within ±2 cm of center of screen If spot is not within ±2 cm of center of screen, refer to DC unbalance trouble shooting procedure (step 1 of this procedure).	23
23	Check main vertical sensitivity as in table 5-7, step 10.	Peak-to-peak deflection is 4 cm ±0.2 cm	24
		If peak-to-peak deflection is not 4 cm ±0.2 cm, refer to sensitivity trouble shooting procedure (step 10 of this procedure).	

TABLE 4-5. (Continued)

STEP	ACTION	RESULTS	NEXT STEP
24	Check main vertical amplifier passband as in table 5-7, step 11.	If 3-db point is higher than 30 mc, passband is correct.	
		3-db point is lower than 30 mc	25
25	Make a continuous check of frequency response from 50 kc to 35 mc.	If there are no dips or peaks in response, and 3-db point is higher than 30 mc, response is correct.	
		Dips or peaks present, or 3-db point is lower than 30 mc	26
26	Check DC voltages at test points E15 and E16 with spot centered.	Voltages are +180 volts ±10 volts	27
		If voltages are not +180 volts ±10 volts, make DC measurements throughout the amplifier until fault is located. Correct fault and repeat step 21.	
27	Set up equipment as in table 5-7. Adjust C31 (see Figure 5-3) and vertical deflection plate lead dress for flat top on pulse. Adjust C20, L1, and L2 for best corner on pulse.	If rise time (10-90%) is 11 nanoseconds or less, pulse response is correct.	
		If, with best setting of adjustments, rise time is greater than 11 nanoseconds: a. Check vertical deflection plate leads for poor connections. b. Replace tubes one at a time in the following order: V1, V6, V7, V12, V13, V11, V2, V3, V10, and V4. c. Short out inductor on opposite sides of the amplifier. If shorting on one side has same effect on pulse rise as opposite side, inductors are not faulty. If not, check and replace. Check pairs in the following order: L1 - L2 L3 - L5 L13 - L16 L14 - L17 L6 - L3 L4 - L6 L19 - L20 L21 - L22 d. Check C22 and C25 by paralleling with good one or replacing. e. If there are steps on the pulse top at multiples of 0.2 microseconds apart, replace delay lines.	

4-8. HORIZONTAL AMPLIFIER.

a. HORIZONTAL AMPLIFIER FUNCTIONAL DESCRIPTION. The horizontal amplifier amplifies the internal sweep signal or an external signal applied to the horizontal INPUT connector, and drives the horizontal deflection plates of the CRT. The horizontal amplifier consists of three etched circuit boards: A201, located on the bottom (center, front) of the instrument; A203, located perpendicular to A201; and A202, the output circuit, located on the top (center, rear) of the instrument (see figures 5-9 and 5-10).

The Horizontal Amplifier Functional and Servicing Block Diagram is shown in figure 4-9. The sweep signal is applied through the HORIZONTAL DISPLAY switch to cathode follower V201A. From V201A the signal passes through cathode follower V202A and one side of a balanced attenuator to one input of a differential amplifier. Cathode follower V202B controls the second input to the differential amplifier through the other side of the balanced attenuator. The input to cathode follower V202B is grounded through a resistance.

The differential amplifier amplifies the difference between its two input signals and provides a balanced output signal, which is applied to cathode followers V206A and V206B. These cathode followers drive the CRT deflection plates. Cathode follower V206B also drives capacitance driver V207, which acts as the cathode resistance for cathode follower V206A. The capacitance driver, which is effective only at high frequencies due to the small value of coupling-capacitor C216, takes a small amount of signal from the cathode of V206B (positive-going sweep), inverts the signal, and adds it (in-phase) to the negative-going sweep at the cathode of V206A. Cap Driver Adj, C216, adjusts the amount of signal added so that differences in slope at the start of the sweep at both cathodes of V206 are cancelled, resulting in a linear sweep at high sweep speeds.

External horizontal signals applied to the INPUT connector pass through an attenuator, cathode follower V201B, and the HORIZONTAL DISPLAY switch to cathode follower V201A. Otherwise the operation is the same as described above for the sweep signal.

The HORIZONTAL DISPLAY switch selects the signal to be applied to the horizontal deflection plates. The switch also controls the input attenuator and the balanced attenuator. The balanced attenuator provides a means of sweep expansion and in combination with the input attenuator provides steps of external horizontal sensitivity. The EXTERNAL VERNIER control varies the series resistance in the output of cathode follower V201B and thereby varies the output of V201B. The range of the EXTERNAL VERNIER is sufficient to provide continuous adjustment of external horizontal sensitivity between the calibrated settings of the HORIZONTAL DISPLAY switch.

A section of the BEAM FINDER switch is in the common cathode circuit of V204 and V205. When pressed, the switch reduces the gain so that an unbalance prior to V204 and V205 cannot deflect the CRT beam off the screen.

b. HORIZONTAL AMPLIFIER TROUBLE SHOOTING. Trouble symptoms in the horizontal amplifier fall into four classes: (1) the spot cannot be centered horizontally (DC unbalance); (2) high noise level (ripple or microphonics); (3) incorrect midband sensitivity; or (4) poor high-frequency response. Three separate trouble-shooting procedures are given for trouble shooting these problems in the trouble-shooting chart, figure 4-6. The procedure given for trouble shooting for DC unbalance should also be used in trouble shooting for excessive noise level. Before trouble shooting a problem of sensitivity, be sure that the DC balance and the CRT deflection sensitivity are satisfactory (CRT deflection sensitivity can be checked in response to vertical deflection, indicating that proper high-voltage power supply voltages are applied to the CRT). Since high-frequency response depends upon suitable balance and midband sensitivity, the procedure for trouble shooting high-frequency response is presented last in table 4-6, and presumes that the balance and midband sensitivity are properly set. The trouble-shooting techniques upon which the step-by-step procedure of table 4-6 is based are discussed further below. Voltage measurements at test points are shown on both the servicing block diagram (figure 4-9) and the schematic diagram (figure 5-41).

The quickest way to isolate the source of noise or DC unbalance is to connect a jumper across corresponding circuit points on the top and bottom sides of the horizontal amplifier. If so doing eliminates the noise or unbalance, the trouble is ahead of the short; if the trouble symptom persists, the source is after the short. The noise level in the output, across test points C20 and C21, should not exceed 7 millivolts peak-to-peak. Sharp taps on the rear of the chassis should not produce a spot deflection of more than 5-millimeters.

The trouble-shooting procedure given in table 4-6 presents the above method of a "half-split" sequence, i.e., making the first test midway in the amplifier, the second test midway in the amplifier half that is found defective by the first test, and so on. After the trouble is isolated to a stage, the faulty part can be located by making DC voltage measurements and comparing them to the voltages given on the servicing block diagram and the schematic diagram.

Insufficient sensitivity (low gain) in the amplifier is usually caused by a weak tube, incorrect heater, or defective plate supply voltage. The method used to isolate the cause of low sensitivity is to apply a 400-cycle sine-wave signal to the front-panel horizontal INPUT connector and then make AC voltage measurements at the test points shown in the servicing block diagram. Again the "half-split" sequence is used, beginning at the center of the amplifier to determine which half of the amplifier is low in sensitivity, and then going to a point midway in the defective amplifier half. The AC measurements are made across the two sides of the amplifier to simplify the readings. The measuring instrument used must not shift the horizontal position of the trace when it is connected to the circuit. After the stage causing low sensitivity is repaired, apply a 1.0-volt

peak-to-peak input signal with the HORIZONTAL DISPLAY control set to 0.1 VOLTS/CM, and adjust the EXT. GAIN control, R212, to obtain 10-centimeters vertical deflection.

Before trouble shooting a problem of high-frequency response, be sure that the DC balance and midband sensitivity are satisfactory. The test for correct frequency response is to apply a 1-volt peak-to-peak, 400-cycle sine wave to the horizontal INPUT and note the deflection sensitivity as in the previous procedure. Then change the input frequency to 1 megacycle while holding the input level constant, and note how much the deflection sensitivity decreases. The most likely cause of poor high-frequency response is a weak tube or lack of proper circuit adjustment following replacement of a tube.

TABLE 4-6. HORIZONTAL AMPLIFIER TROUBLE SHOOTING

STEP	ACTION	RESULTS	NEXT STEP
DC UNBALANCE			
1	Set the HORIZONTAL DISPLAY switch between INTERNAL SWEEP X1 and .1 VOLTS/CM positions.	If spot is exactly in the center of the graticule horizontally, DC balance is correct.	
		Spot not centered	2
2	Refer to paragraph 5-4d(1) (Balance) and perform adjustments.	If adjustments put spot exactly in the center of the graticule horizontally, DC balance is correct.	
		Adjustments don't center spot	3
3	Set the HORIZONTAL DISPLAY switch to 0.1. Short test point C13 to C14.	Spot appears on screen	4
		Spot does not appear on screen	7
4	Short test points C11 and C12.	Spot appears on screen	5
		If spot does not appear, check V203 circuit.	
5	Short test points C8 and C9.	Spot appears on screen	6
		If spot does not appear, check Q201 and Q202 circuits.	
6	Short test points C6 and C7.	If spot appears, check attenuator.	
		If spot does not appear, check V202 circuit.	
7	Short test points C16 and C17.	If spot appears, check V204 and V205 circuits.	
		Spot does not appear on screen	8
8	Short test points C20 and C21.	If spot appears, check V206A and B circuits.	
		If spot does not appear, check: a. V207 circuits b. Connections to CRT horizontal deflection plates c. Low-voltage power supply d. High-voltage power supply e. CRT	

TABLE 4-6. (Continued)

STEP	ACTION	RESULTS	NEXT STEP
		SENSITIVITY	
9	Check Horizontal Sensitivity Calibration as in table 5-5, steps 5 and 6.	If horizontal sensitivity meets performance standards, amplifier is correctly set.	
		Horizontal sensitivity does not meet performance standards	10
10	Make Horizontal Amplifier gain and balance adjustments as outlined in paragraph 5-4d.	Gain adjustments can be made	9
		Gain adjustments cannot be made	11
11	Set up equipment as in step 9. Measure the AC voltage between test points C13 and C14 with differential oscilloscope (AN/USM-140B with AM-3567/USM Plug-In).	AC voltage approximately 3.4 volts peak-to-peak	12
		AC voltage less than 3.4 volts peak-to-peak	14
12	Measure the AC voltage between test points C16 and C17.	AC voltage approximately 300 volts peak-to-peak	13
		If AC voltage is less than 300 volts peak-to-peak, check V204 and V205 circuits.	
13	Measure the AC voltage between test points C20 and C21.	If AC voltage is approximately 290 volts peak-to-peak, check: a. Connections to CRT b. DC voltage on CRT horizontal deflection plates c. V207 circuit d. CRT e. High-voltage power supply f. Low-voltage power supply	
		If AC voltage is less than 290 volts peak-to-peak, check circuit around V206A and B	
14	Measure the AC voltage between ground and test points C8 and C9.	AC voltage about 0.19 volt peak-to-peak at C8, and 0.175 volt at C9	15
		AC voltage at C8 and C9 not as above	16
15	Measure the AC voltage between test points C11 and C12.	If AC voltage is approximately 3.7 volts peak-to-peak, check circuit around V203A and B.	
		If AC voltage is less than 3.7 volts peak-to-peak, check circuit around Q201 and Q202.	
16	Measure the AC voltage between test point C5 and ground.	AC voltage approximately 0.4 volt peak-to-peak	17
		AC voltage less than 0.4 volt peak-to-peak	18

TABLE 4-6. (Continued)

STEP	ACTION	RESULTS	NEXT STEP
17	Measure the AC voltage between ground and test points C6 and C7.	If AC voltage is about 0.23 volt peak-to-peak at C6 and 0.13 volt peak-to-peak at C7, check circuit around V202A and B.	
		If AC voltages at C6 and C7 are less than above, check attenuator.	
18	Measure the AC voltage between test point C3 and ground.	If AC voltage is approximately 0.93 volt peak-to-peak, check circuit around V201A.	
		AC voltage less than 0.93 volt peak-to-peak	19
19	Measure the AC voltage between test point C2 and ground.	If AC voltage is approximately 1 volt peak-to-peak, check circuit around V201B.	
		If AC voltage is less than 1 volt peak-to-peak, check set up or input circuit.	
	HIGH FREQUENCY RESPONSE		
20	Set up equipment as in table 5-5.	If frequency at which deflection on CRT decreases to 7.1 cm (3-db point) is greater than 1 mc, horizontal passband is acceptable.	
		3-db point less than 1 mc	21
21	Make adjustments as in paragraph 5-4d(3) (frequency compensation and external frequency compensation).	If adjustments can be made, passband is acceptable.	
		Adjustments cannot be made	22
22	Check DC balance and sensitivity as in DC unbalance, step 1, and table 5-5 horizontal sensitivity calibration.	DC balance and horizontal sensitivity correct	23
		If DC balance and horizontal sensitivity are incorrect, use DC Unbalance and Sensitivity trouble-shooting procedures to isolate the faulty component. Replace faulty component.	21
23	Determine from step 2 if poor passband is in internal horizontal amplifier or external horizontal amplifier only.	Problem in external horizontal amplifier only	24
		Problem in internal horizontal amplifier	25
24	Check V201B and associated circuitry.	Replace deflective component and repeat external frequency compensation, paragraph 5-4d.	
25	Check DC voltage at horizontal deflection plates.	If voltage is +150 volts ±10 volts, check deflection plate lead dress.	
		If voltage is not +150 volts ±10 volts, make DC measurements in amplifier to locate faulty stage. Check stages in the following order: V204, V205, V207, V206, V203, Q201, V202, V201, CRT, and high-voltage power supply.	

4-9. SWEEP GENERATOR.

a. SWEEP GENERATOR FUNCTIONAL DESCRIPTION. The sweep generator produces a linear sawtooth waveform for sweeping the spot across the CRT. It also includes the circuit for synchronizing the start of the sawtooth with a specific voltage level on an applied signal. The sweep generator consists of two sections, the sweep generator circuit and the synchronizing circuit, both located on etched circuit A101 on the bottom of the oscilloscope chassis (see figure 5-10). The output of the sweep generator is connected through the HORIZONTAL DISPLAY switch to the horizontal amplifier. The Sweep Generator Functional and Servicing Block Diagram shows the functional circuit arrangement of the sweep generator. The circuits and operating modes are described below.

(1) SYNCHRONIZING CIRCUIT. The synchronizing circuit consists of an input amplifier V101 and a Schmitt trigger V103. The input amplifier is composed of two triodes, V101A and V101B, which receive the input sync signals as selected by TRIGGER SOURCE switch S101. When the amplified signal drives the V103 grid through the lower hysteresis limit, V103 produces a negative pulse at the plate of V103B, which is differentiated by the following coupling network to supply a negative spike to the input grid of V104A/V105A, also a Schmitt trigger.

The Schmitt trigger circuit is a form of bi-stable multivibrator used where fast-rising signals are required. Figure 4-10 shows a simplified Schmitt trigger circuit with input and output waveforms. The output of the circuit is a voltage step, either positive or negative depending upon the slope of the input. The input voltage levels at which a Schmitt trigger circuit switches are its hysteresis limits. Note that the circuit does not switch unless the input crosses both limits.

The TRIGGER LEVEL control sets the zero-signal output level of trigger amplifier V101. Since the trigger amplifier is DC coupled to trigger generator V103, the control determines the voltage levels the trigger signal must cross if the amplified trigger signal is to cross the hysteresis limits of V103. The TRIGGER SLOPE switch determines whether or not the trigger amplifier inverts the trigger signal and thereby determines whether the sweep starts on the positive-going or negative-going portion of the trigger signal.

(2) SWEEP GENERATOR CIRCUIT. Gate generator V104/V105A is a Schmitt circuit with wide hysteresis limits. Between sweeps, the A section of bias control cathode follower V113 holds the bias at the input of the gate generator close to the lower hysteresis limit. Trigger generator V103 applies both positive and negative triggers. The positive triggers are reduced in amplitude and have no effect, but a negative pulse drives the input to the gate generator below the lower hysteresis limit and causes the gate generator to switch.

When it switches, gate generator V104/V105A provides a positive and a negative gate. The positive gate is applied to the high voltage power supply to turn on the CRT beam and to the front-panel GATE OUTPUT connector for external use. The negative gate applies reverse bias to switch diode CR104. Prior to the gate, the switch diode had been forward-biased and had been holding the input to integrator V109 at about zero volts. The negative gate opens the diode switch and frees the input to the integrator.

Once freed, the input to integrator V109 starts going negative because it is connected to -100 volts through the sweep resistor. The integrator amplifies and inverts its input to produce a large, positive-going output which is applied back to the input through cathode follower V115 and the sweep capacitor. As a result, the voltage at the input to integrator V109 changes by about one volt during sweep time. The voltage across the sweep resistor, then, changes by about 1%, and the current through the resistor changes by the same amount. The current through the sweep resistor is the charging current for the sweep capacitor; therefore the voltage across the sweep capacitor changes quite linearly with time, and the sweep signal is a nearly linear voltage ramp.

The SWEEP TIME switch changes the value of sweep resistor or capacitor to change the sweep time. The sweep output is applied to the horizontal amplifier and to the front-panel SWEEP OUTPUT connector.

An attenuated sweep signal is applied to the input of gate generator V104/V105A through hold-off cathode follower V114A and section B of bias control cathode follower V113. This signal drives the input of the gate generator up to the upper hysteresis limit and causes the gate generator to switch back to its pre-sweep state. The gate generator then ends the gates, blanking the CRT and forward-biasing switch diode CR104. The switch diode returns the input to integrator V109 to its pre-sweep level, discharging the sweep capacitor.

During the time period of one sweep, hold-off cathode follower V114A charges a hold-off capacitor. After the sweep ends, this capacitor lets the input to gate generator V104/V105A down slowly enough to prevent that circuit from being triggered again until the remaining sweep circuits have recovered completely. The SWEEP TIME switch changes the size of the hold-off capacitor to match the selected sweep time.

Clamp V105B ensures that each sweep starts from the same voltage level, about -50 volts.

The SWEEP MODE control determines the no-signal bias at the input to gate generator V104/V105A by setting the bias on the A section of bias control cathode follower V113. With the control set to PRESET or in the TRIGGER portion of its adjustable range, the gate generator bias cannot drop below its lower hysteresis limit unless the trigger generator provides a trigger. With the control set in the FREE RUN portion of its adjustable range, the gate bias is allowed to drop below its lower hysteresis limit. Thus as the hold-off capacitor discharges, it lets the gate generator bias all the way down to the lower hysteresis limit, and another sweep starts automatically without requiring a trigger.

(3) SINGLE SWEEP OPERATION. The SWEEP OCCURRENCE switch selects normal or single-sweep operation. Normal operation is discussed above. For single-sweep operation, the

SWEEP OCCURRENCE switch converts V113 into a Schmitt circuit. As the sweep signal from hold-off cathode follower V114A rises to end the gate from the gate generator, the sweep signal also switches the Schmitt circuit of V113 so that V113B conducts and V113A is cut off. The B section of V113 then holds the input to gate generator V104/V105A high enough so that triggers from the trigger generator cannot actuate the gate generator, and the sweep generating circuits are effectively disabled. A positive signal applied to V113A switches the Schmitt circuit of V113 so that V113A conducts and V113B is cut off. The "A" section of V113 then sets the input to the gate generator according to the setting of the SWEEP MODE control, and the sweep generating circuits are effectively armed. The switching signal for V113A can be an external signal applied to the ARMING INPUT connector or an internal signal obtained from the SWEEP MODE control when the control is rotated just out of PRESET.

b. SWEEP GENERATOR TROUBLE SHOOTING. To begin trouble shooting the sweep generator, first determine whether the sync circuit operates satisfactorily by measuring the output waveform at test point D4 (see figure 4-18). AC and DC voltage measurements and waveforms useful in trouble shooting, and conditions for their measurement, are given on both the block diagram (figure 4-11) and the schematic diagram (figure 5-38). If the waveform is not present or is low in amplitude, check AC waveforms in the sync circuit. Waveforms on the schematic are given for a 2-volt peak-to-peak 400-cycle sine-wave input at INPUT J101. If the waveform has the indicated amplitude, an incorrect non-operating sweep will probably be due to a fault in the sweep generator circuit. Trouble symptoms in the sweep circuit fall into three classes: (1) sweep out of calibration, (2) non-linearity, or (3) no sweep. A step-by-step procedure for localizing the cause of a non-operative sweep is given in the trouble-shooting chart for the sweep generator, table 4-7. Trouble shooting techniques for improper calibration and non-linearity, and a further discussion of the technique for localizing the trouble causing a non-operative sweep are given below.

If the sweep rate as measured with a time-mark generator is found to be out of calibration on only certain ranges, the probability is that the adjustment for those ranges is not properly set. If all ranges are out of calibration, the probability is that the horizontal amplifier sensitivity is not properly set or the CRT sensitivity is down.

If the sweep is found to be non-linear, the probability is that the horizontal amplifier or the CRT is defective; check the horizontal amplifier according to its trouble-shooting procedure for poor high frequency response.

If the sweep circuit produces no sweep signal, the first item to check is the waveform at test point D4, to determine whether the gate generator receives an input signal. Then measure the output of the gate generator at test point D11 (see figure 4-18) to see if it has been switched (-6.8 volts if it has; -3.6 volts if it has not). If the gate generator has not been switched, check tubes in gate and hold-off circuits (V104, V105, V113, and V114). If the gate generator has been switched, check tubes and diodes in the integrating circuit (V109, V115, V105B, CR103, and CR104). A non-operating sweep can be caused by faults other than defective tubes. Table 4-7 gives a systematic procedure for locating the cause of a non-operating sweep.

USEFUL ILLUSTRATIONS OF THE SWEEP GENERATOR

Illustration	Figure No.	Page No.
Block Diagram	4-11	4-39, 4-40
Location of Test Points	4-18	4-51
Location of Parts	5-17 through 5-20	5-33 and 5-34
Schematic Diagram	5-38	5-61, 5-62
Sweep-Time Switch Functional Schematic Diagram	5-39	5-63, 5-64

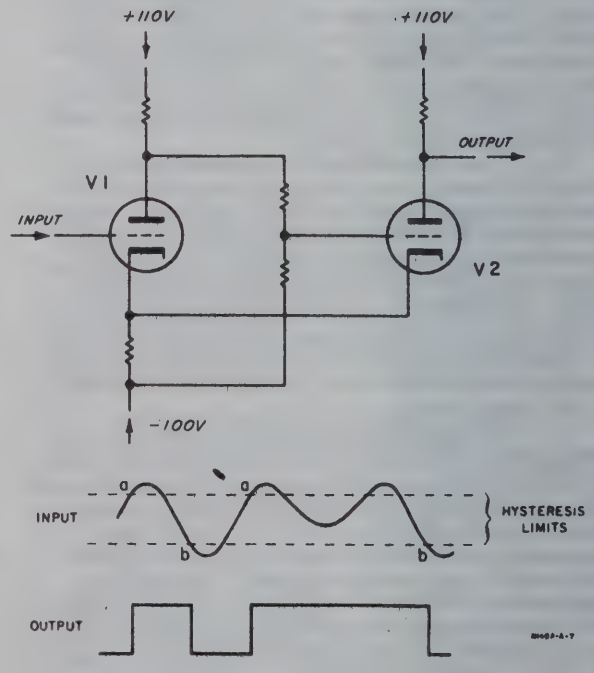

Figure 4-10. Schmitt Trigger Simplified Circuit with Waveforms

TABLE 4-7. SWEEP GENERATOR TROUBLE SHOOTING

STEP	ACTION	RESULTS	NEXT STEP
		NO SWEEP	
1	Unsolder the C109 end of R124.		2
2	With a clip lead, connect R124 to ground then -100 volts. Measure the DC voltage at test point D15.	DC voltage changes from -50 volts to +84 volts	3
		Not as above	9
3	Same as step 2. Measure the DC voltage at test point D19.	-67 volts to -3 volts	4
		Not as above	6
4	Same as step 2. Measure the DC voltage test point D6.	-38 volts to -5 volts	5
		Not as above	8
5	Same as step 2. Measure the DC voltage test point D21.	+9 volts (normal)	
		If not +9 volts, SWEEP MODE is not in PRESET, or problem is in preset circuit or V113A.	
6	Same as step 2. Measure the DC voltage at test point D17.	-75 volts to -8.4 volts	7
		If not as above, check sweep length circuit.	
7	Same as step 2. Measure the DC voltage at test point D18.	If voltage is -67 volts to -3 volts, check horizontal plug-in connections (be sure plug-in is set for NORMAL sweep).	
		If not as above, check V114A circuit.	
8	Same as step 2. Measure the DC voltage at test point D20.	If -38 volts to -.04 volt, V113B is operating correctly.	
		If not as above, check V113 circuit.	
9	Same as step 2. Measure the DC voltage at test point D11.	-4.2 volts to -6.6 volts	10
		If not as above, refer to steps 14 and 16, or check CR103.	
10	Same as step 2. Measure the DC voltage at test point D13.	+67 volts to +332 volts	11
		Not as above	12
11	Same as step 2. Measure the DC voltage at test point D14.	If -58 volts to +83 volts, check V115 circuit.	
		If not as above, check circuit around R156, C123, R157, and R313, or high-voltage power supply.	
12	Same as step 2. Measure the DC voltage at test point D12.	If -4.6 to -7.0 volts, check V109 circuit.	
		If not as above, check CR104 circuit.	
13	Same as step 2. Measure the DC voltage at test point D16.	If -50.8 volts to -52.0 volts, check CR103 and V105B circuit.	
		Not as above	14

TABLE 4-7. (Continued)

STEP	ACTION	RESULTS	NEXT STEP
14	Same as step 2. Measure the DC voltage at test point $\overline{D8}$.	+7.8 volts to +110 volts	15
		If not as above, check V105 circuit, V104A/B circuit, and CR101.	
15	Same as step 2. Measure the DC voltage at test point $\overline{D9}$.	If -51.7 volts to -16.7 volts, check V105A circuit.	
		Not as above	16
16	Same as step 2. Measure the DC voltage at test point $\overline{D10}$.	If -1.83 volts to -17.6 volts, check V104B.	

4-10. CALIBRATOR CIRCUIT.

a. CALIBRATOR CIRCUIT FUNCTIONAL DESCRIPTION. The calibrator is located on the high-voltage power supply etched circuit assembly, and is shown on the schematic diagram for the high voltage power supply, figure 5-43. It consists of a type 7308 tube (V306) connected as a free-running 1KC multivibrator, a diode clamp V307A to limit the positive-going voltage at the output plate of the multivibrator, and a second diode V307B in series with the output signal to prevent the voltage at the CALIBRATOR output connectors from going negative as the output plate passes the 0-volt level during half of the cycle. Thus, the calibrator circuit produces an output 1KC square wave voltage which is clipped on negative and positive peaks at 0 and +110 volts. This output is applied to an attenuator which provides calibrated outputs in volts and millivolts. When the CALIBRATOR switch is set to OFF, the output side of the multivibrator is cut off by an applied grid bias of -100 volts.

b. CALIBRATOR CIRCUIT TROUBLE SHOOTING. Problems in the calibrator fall into four categories: (1) no output, (2) poor symmetry and/or period, (3) low amplitude on all ranges, or (4) poor calibration on some ranges. Table 4-8 is the trouble-shooting chart for the calibrator circuit.

In all cases of trouble, except for poor calibration on only some of the ranges (category 4), first check tubes V306 and V307 while observing the output waveform and the output plate waveform as instructed in the procedure of table 4-8. Although tube element voltages are shown in the schematic diagram for the calibrator, practically all troubles will be found by replacing tubes and observing the output waveform. Poor calibration on only certain ranges almost certainly points to damaged resistors in the range selector switch S302.

WARNING

Very high voltages are present in the vicinity of the calibrator circuit. Turn off the oscilloscope when making connections.

TABLE 4-8. CALIBRATOR CIRCUIT TROUBLE SHOOTING

STEP	ACTION	RESULTS	NEXT STEP
1	Check calibrator waveform at CALIBRATOR OUTPUT (test point F1).	No output	2
		Symmetry not within 45% to 55%	3
		Period not within 0.9 to 1.1 milliseconds	3
		Amplitude not within ±3% on all ranges	3
		Poor waveform	3
		Amplitude not within ±3% on certain ranges	4
2	Check waveform at test point F3 or F5	If waveform is as indicated on schematic, check V307 by replacement.	
		If waveform is incorrect, check V306 by replacement.	
3	Check V306 and V307 by replacement, and observe output waveform.	If no improvement, check resistors and capacitors in multivibrator circuit.	
4	Turn instrument off and measure resistors on CALIBRATOR range switch.	If comparison with the values shown on the schematic diagram shows a value to be in error, replace the resistor.	

4-11. MX-2930B/USM VERTICAL PLUG-IN UNIT.

a. MX-2930B/USM VERTICAL PLUG-IN FUNCTIONAL DESCRIPTION. This Dual-Trace Preamplifier vertical plug-in unit receives one or two input signals from external sources, amplifies them, combines them in one of four different ways, and applies them to the main vertical amplifier input. The plug-in contains two separate differential amplifiers on etched circuit A501 and a switching circuit on etched circuit A502. The outputs of both amplifier channels are connected in parallel, and each provides a balanced output to drive the main vertical amplifier. The front-panel Vertical Presentation Switch (S505), however, allows only one amplifier to operate at a time. S505 operates the switching circuit to turn on either one amplifier or the other (individual Channel A or Channel B operation), or to alternately turn on one amplifier during one sweep and the other amplifier on the next sweep (ALTERNATE operation), or to turn on the amplifiers alternately in 1-microsecond segments during each sweep (CHOPPED operation). A fourth mode of operation, A-B, connects the A and B channel inputs to opposite sides of the Channel A differential amplifier.

The Vertical Plug-In Functional and Servicing Block Diagram, figure 4-13, gives a simplified version of the circuits and switching arrangements. Basically, the circuit consists of two identical input attenuators, two identical amplifier channels, and a switching circuit as described in detail below.

(1) INPUT ATTENUATORS. Each input attenuator divides its signal in a calibrated ratio for each setting of the SENSITIVITY switch to give sensitivities of 0.02 to 20 volts per centimeter. Except for the 0.02 VOLTS/CM range, each range is provided with a compensating attenuator (Atten Comp) to maintain these ratios for high frequencies by capacitive division. Each range also has a capacitor (Cap. Adj) for adjusting input capacity, so that frequency compensation with the test prod will be constant on all ranges.

(2) AMPLIFIERS. Each of the two amplifying channels consists of four stages: two balanced cathode follower stages, a common-base transistor amplifier, and a balanced output cathode follower stage. The SENS CAL control, R504 (R546), varies the bias on the second cathode follower stage, causing a gain variation of between 0.4 and 0.7. The BAL control, R508 (R543), balances the DC levels at the cathodes of V502A/B (V505A/B), so that no vertical shift takes place when the POLARITY switch is operated. The signal from V502A/B (V505A/B) drives the emitters of the transistor amplifier Q501/Q502 (Q503, Q504). This stage is controlled by the switching circuit, being either cut off or operating as determined by the bias supplied through CR501 (CR505). The output cathode followers drive the main vertical amplifier in the AN/USM-140B. The VERTICAL POSITION control, R520 (R530), varies the DC levels at the grids of V503A/B (V506A/B), and since the main vertical amplifier is also DC-coupled, these DC levels will determine the vertical position of the trace on the CRT.

(3) SWITCHING CONTROL CIRCUIT. The switching control circuit consists of a multivibrator, an amplifier, and a Vertical Presentation Switch. With the Vertical Presentation Switch at position A, both the input and output of the switch signal amplifier are disconnected, and the signal from input A is connected to the A Channel amplifier (V501A/B), and the input B to the B Channel (V504A/B) amplifier. Negative bias is applied to switch off the B half (V508B) of the multivibrator. CR505 conducts, applying a positive voltage to the bases of transistors Q503, Q504, thereby switching off Channel B. With the A half (V508A) conducting, diode CR501 cuts off, and with Q501, Q502 conducting, Channel A is free to amplify the signal from input A. The reverse is true with the Vertical Presentation Switch on position B.

On CHOPPED, the negative bias is eliminated, and the switching multivibrator free runs at a frequency set by C509 and C510, switching on and off Channels A and B. Breakdown diode CR506 limits the saturation to assure the multivibrator self-starting. During chopping, the transient at the beginning of each chop is high. Blanking out the oscilloscope trace at such times erases the transients from observation, and the smooth chopped traces shown in figure 4-18 result. The blanking signal to the CRT is derived from the switching multivibrator, transferred through CR502 and CR503, amplified by V507A, and isolated by cathode follower V507B. Diode CR504 clips off all the negative pulses; the positive pulses are applied to the cathode of the CRT to blank the switching transient.

On A-B, the switching multivibrator switches Channel A on and Channel B off. The signal input to B is applied to the lower half of differential amplifier A, and the differential input, Channel A minus Channel B, is amplified and presented.

On ALTERNATE, the switching multivibrator is rendered bi-stable by applying negative bias on both halves. Pulses, from the oscilloscope, and synchronized with the horizontal sweep signal, are amplified by the switch signal amplifier (V507A/B) to trigger the switching multivibrator, presenting the signals A and B on the screen on alternate sweeps.

b. MX-2930B/USM VERTICAL PLUG-IN TROUBLE SHOOTING. Trouble shooting the vertical plug-in unit presumes that the main vertical amplifier in the oscilloscope is known to be operating satisfactorily. Trouble symptoms in the plug-in unit fall into six classes: (1) the spot cannot be centered vertically (DC balance) in one of the channels; (2) high noise level (ripple or microphonics) in one of the channels, (3) midband sensitivity is low in one of the channels, (4) poor high-frequency (pulse) response, (5) no ALTERNATE operation, or (6) no CHOPPED operation.

Test points and voltage measurements that are useful in trouble shooting are shown on the servicing block diagram, figure 4-13 and the schematic diagram, figure 5-46. A vertical plug-in extender which permits operation of the vertical plug-in unit outside the chassis for convenient access to test points, etc., can be constructed as shown in figure 4-12.

The first step in trouble shooting is to determine if the trouble symptom occurs in one or both of the amplifier channels or in the switching circuit. To determine if the switching circuit operates, measure its tube socket voltages and compare them against those given in the block diagram or schematic diagram.

For the switching multivibrator to turn on the Channel A (Channel B) amplifier, a negative voltage must appear at the plate of V508B (V508A). When the Vertical Presentation Switch is set to ALTERNATE, each unblanking pulse from the sweep generator must cause V508 to switch from one state to the opposite state. When set to CHOPPED, V508 must oscillate at approximately 1 megacycle. To trouble shoot either of the amplifiers, refer to the trouble-shooting data given for the main vertical amplifier.

The quickest way to isolate the source of noise or DC unbalance in either of the amplifiers is to connect a jumper across the corresponding circuit test points on the top and bottom sides of the amplifier. If so doing eliminates the noise or unbalance, the trouble is ahead of the short; if the trouble symptom persists, the trouble is after the short.

Before trouble shooting a problem of sensitivity, be sure that the DC balance is satisfactory, and that the main vertical amplifier sensitivity is properly set. Low gain in the amplifier is usually caused by a weak tube or transistor or incorrect supply voltages. AC measurements for obtaining the gain of each stage are given in the block diagram, for an input of 0.05 volts peak-to-peak. Use a differential oscilloscope (AN/USM-140B with AM-3567/USM Plug-In) for measuring low-level peak-to-peak voltages between test points indicated. Progress in numerical order through both amplifiers until the low gain stage is located. Set the Vertical Presentation Switch to the appropriate channel position for measuring channel gain.

Before trouble shooting a problem of high-frequency response, be sure that the attenuator compensation adjustments are correctly set, and that DC balance, R508 (R543), and midband sensitivity, R504 (R546), are satisfactory. The most likely cause of inadequate high-frequency response is a defective tube or transistor or lack of proper circuit adjustment following replacement of a tube or transistor. Be sure that L501, L502, L511, and L512 have been correctly set.

USEFUL ILLUSTRATION OF THE MX-2930B/USM VERTICAL PLUG-IN

Illustration	Figure No.	Page No.
Block Diagram	4-13	4-45, 4-46
Location of Test Points	4-21 4-22	4-54 4-54
Location of Parts	5-30 through 5-34	5-49 through 5-55
Schematic Diagram	5-46	5-77, 5-78

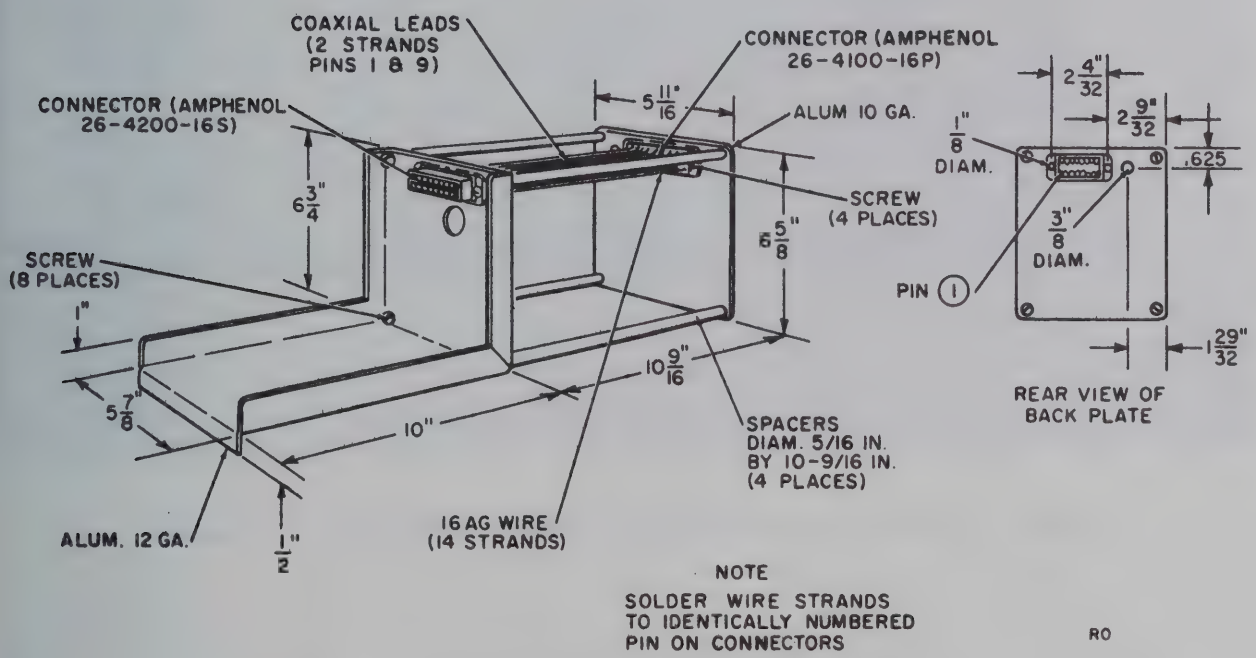

Figure 4-12. Construction of Vertical Plug-In Extender 162A-39A

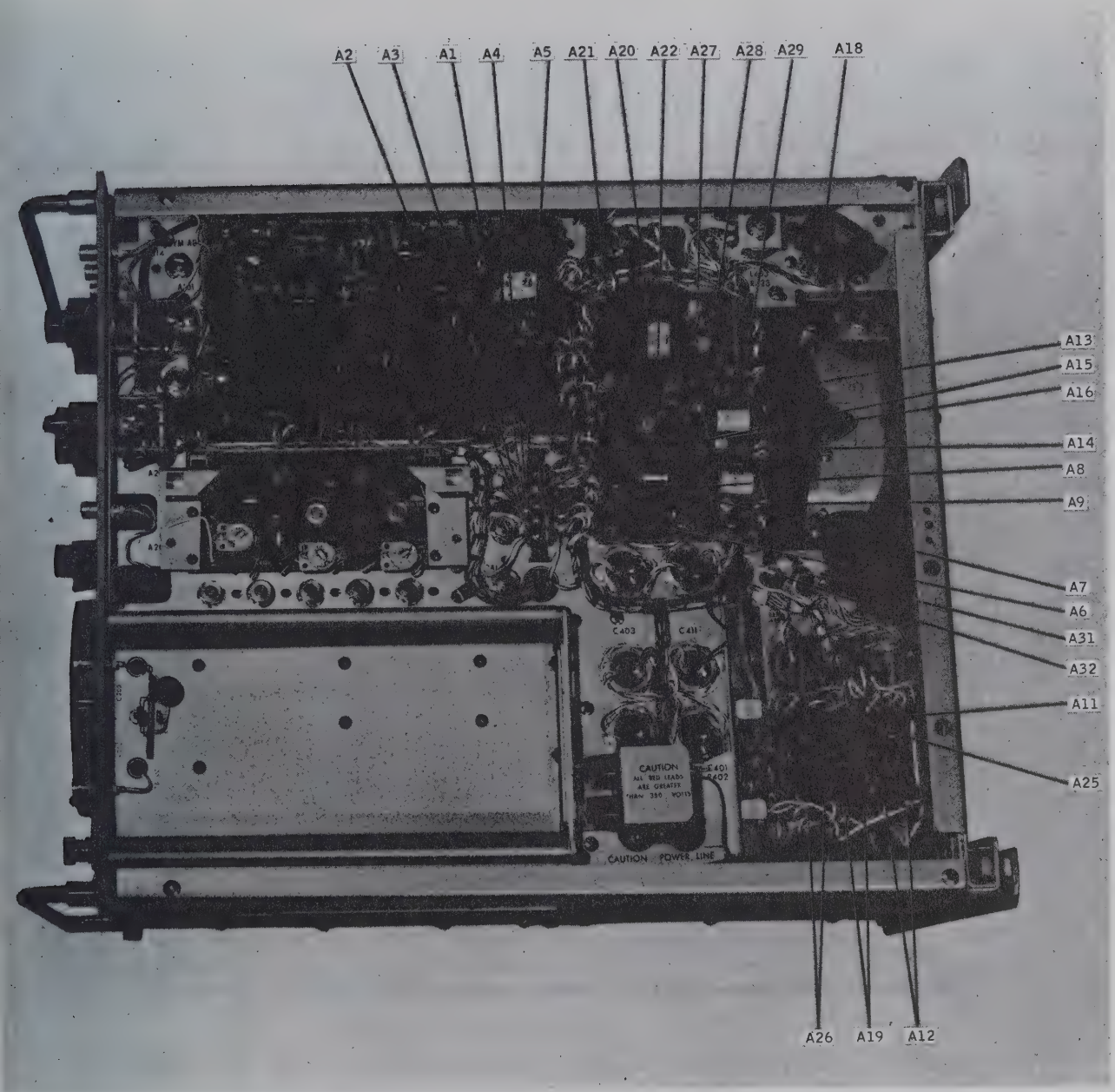

Figure 4-14. Bottom View, Location of Test Points on Low-Voltage Power Supply

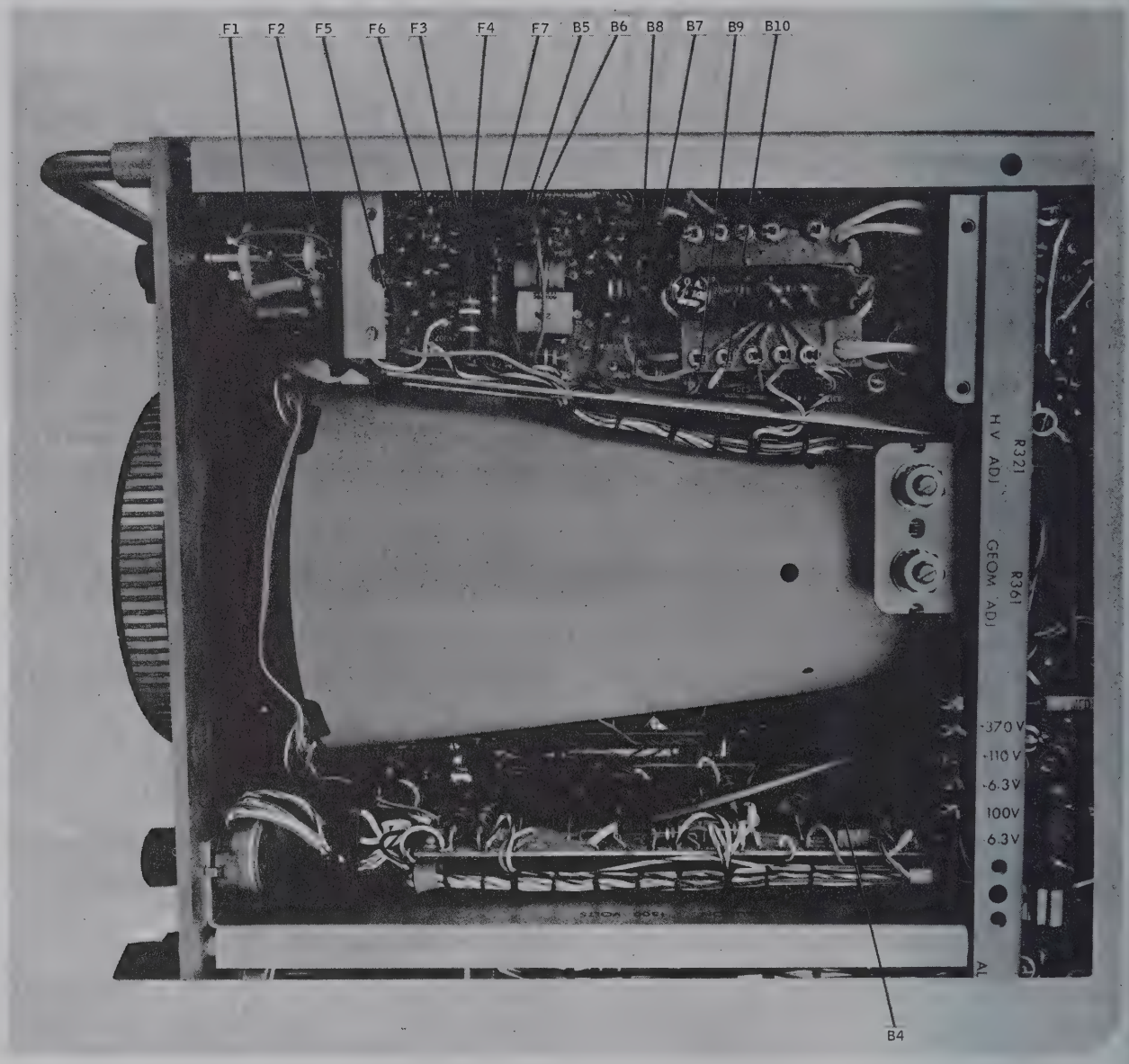

Figure 4-15. Top View, Location of Test Points on High-Voltage Power Supply

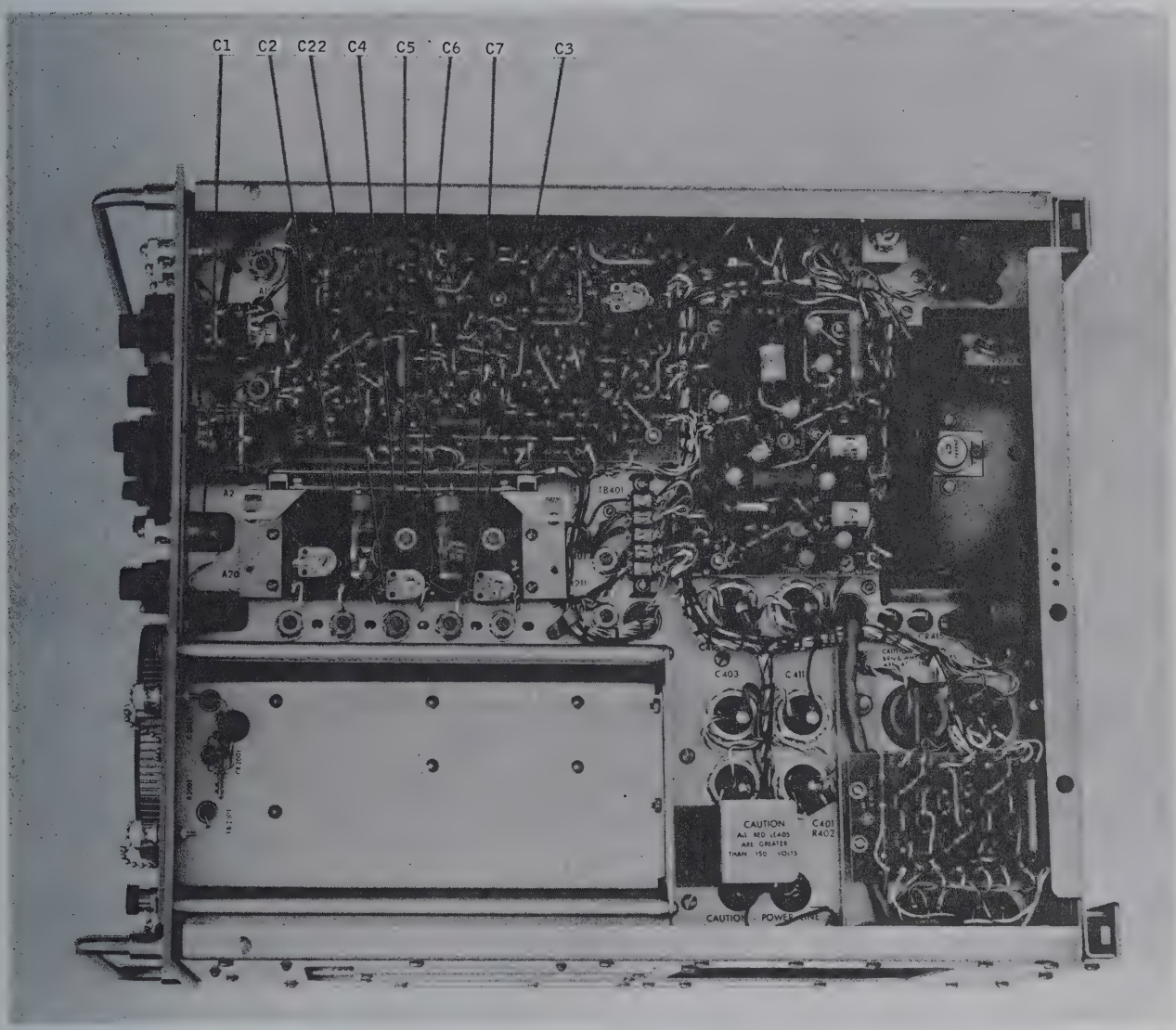

Figure 4-16. Bottom View, Location of Test Points on Horizontal Preamplifier Assembly

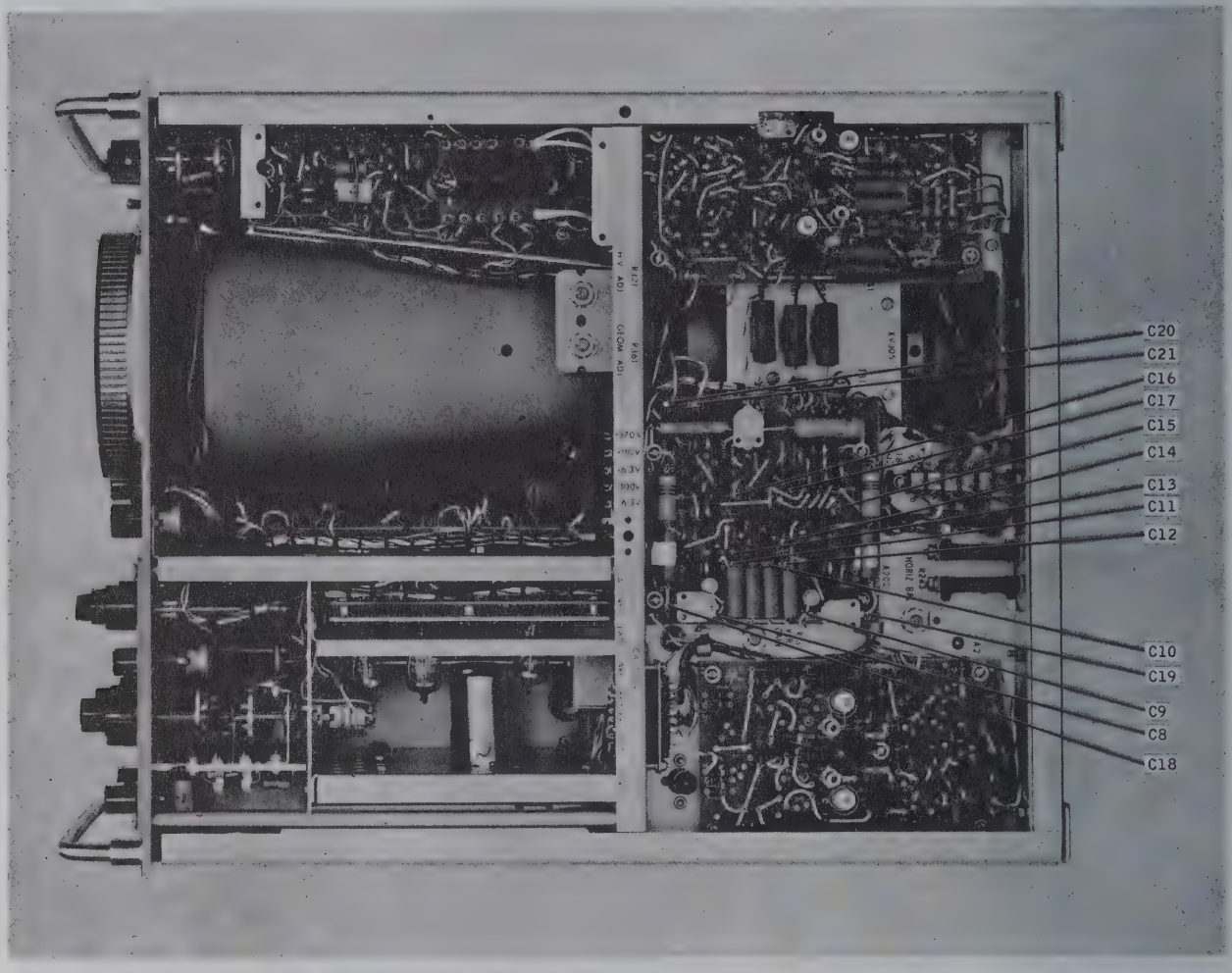

Figure 4-17. Top View, Location of Test Points on Main Horizontal Amplifier and Driver Assembly

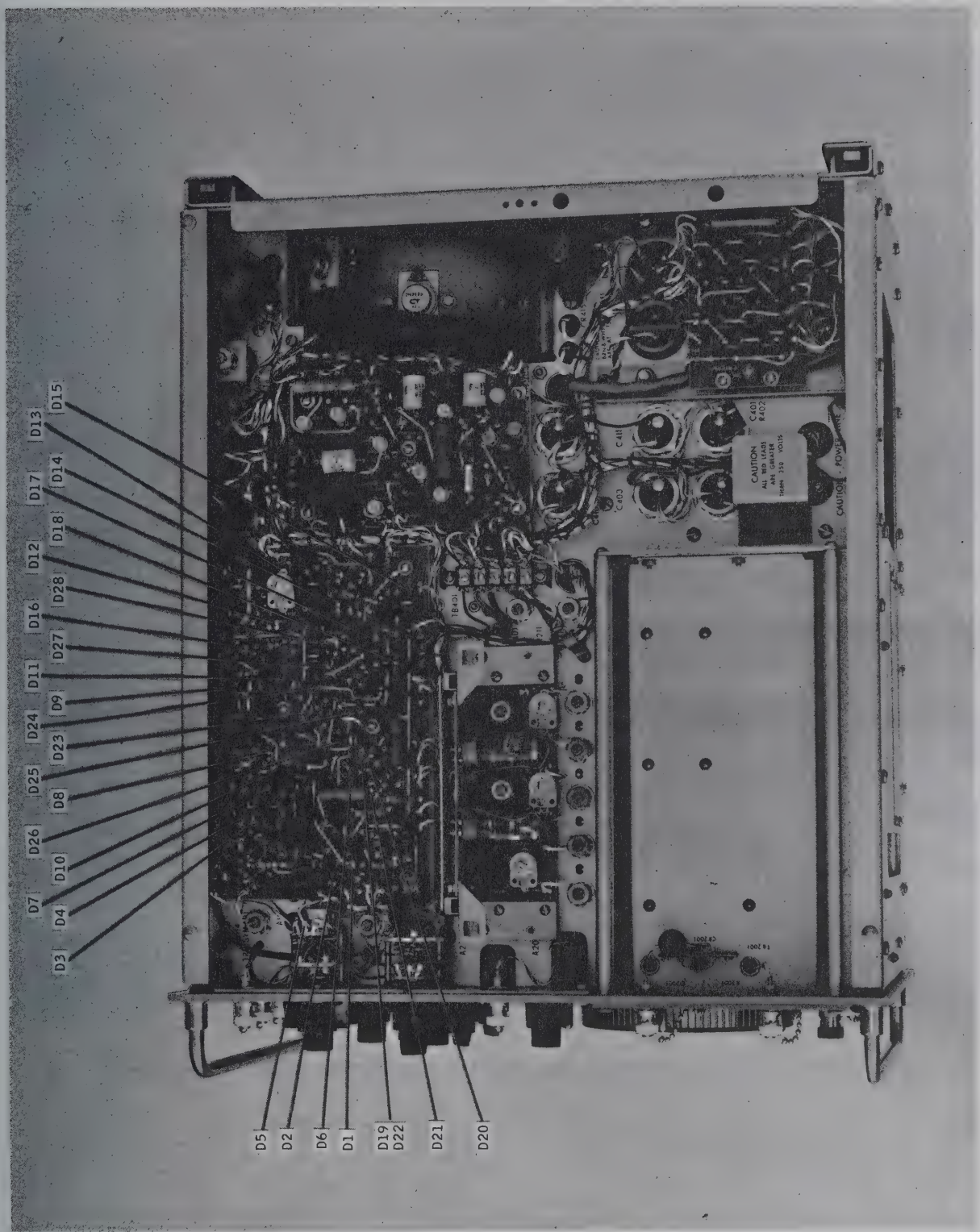

Figure 4-18. Bottom View, Location of Test Points on Sweep Generator Assembly

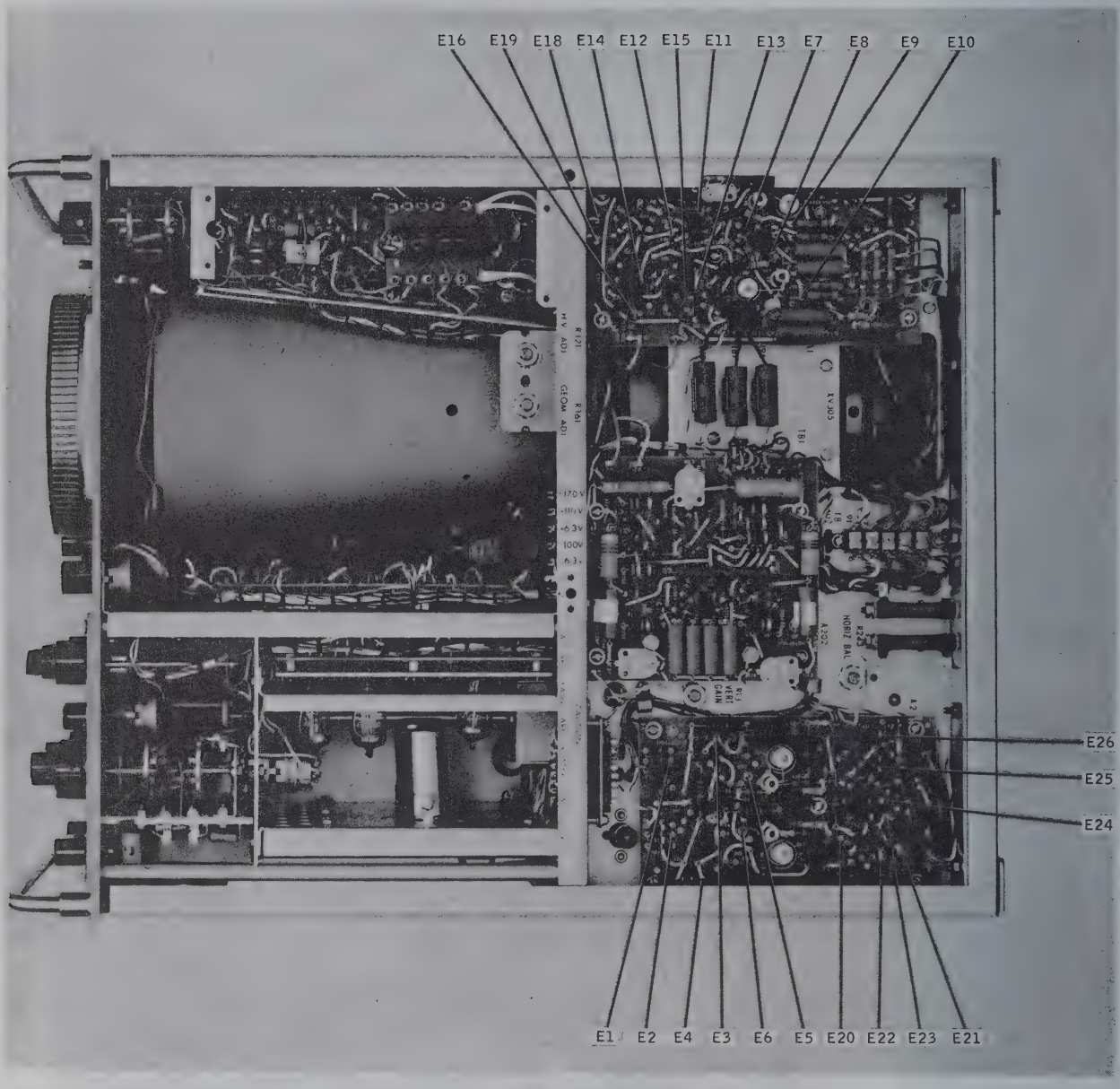

Figure 4-19. Top View, Location of Test Points on Main Vertical Amplifier Assembly

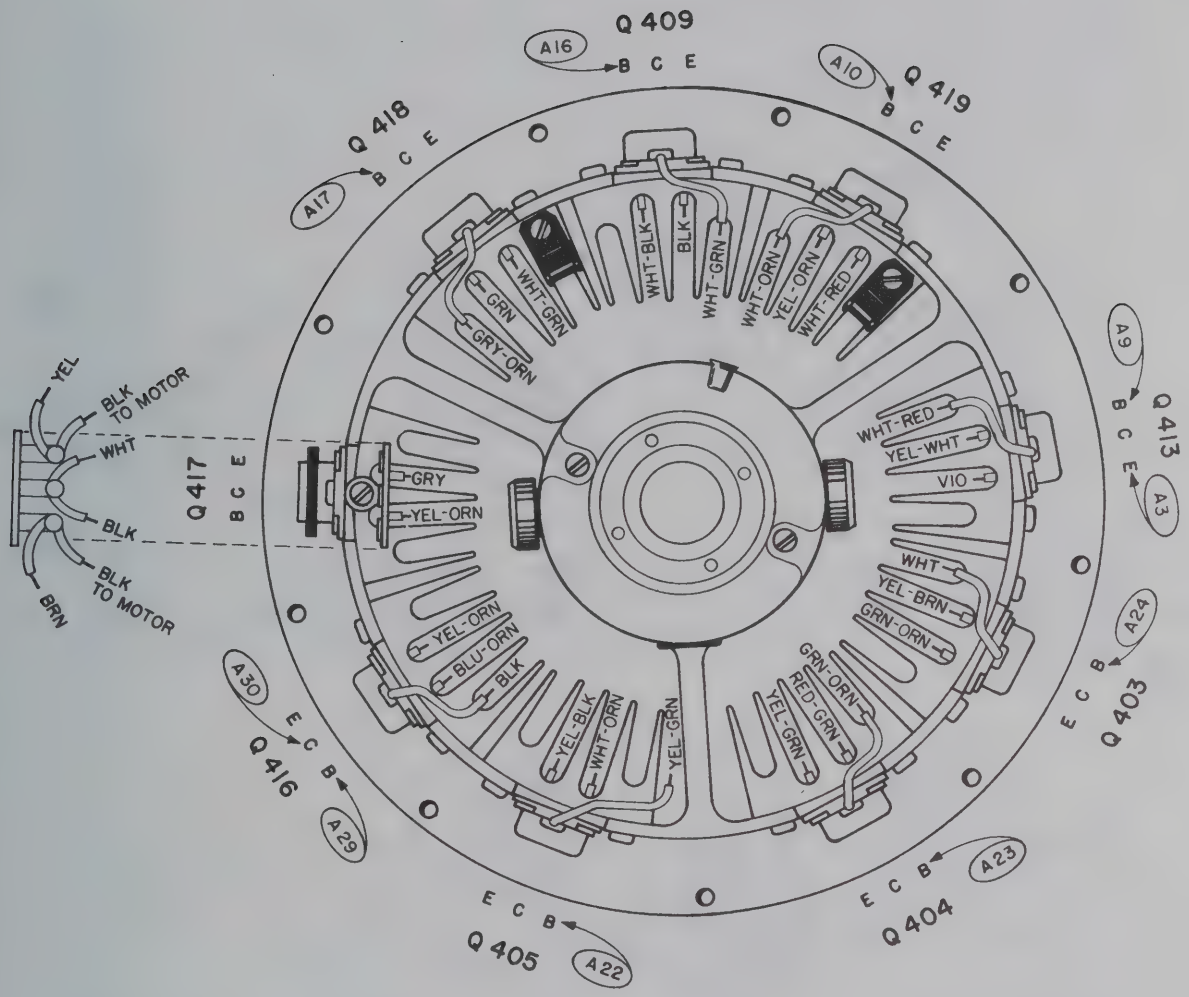

Figure 4-20A. Fan Shroud and Power Transistor Assembly, Location of Test Points and Connections AN/USM-140C

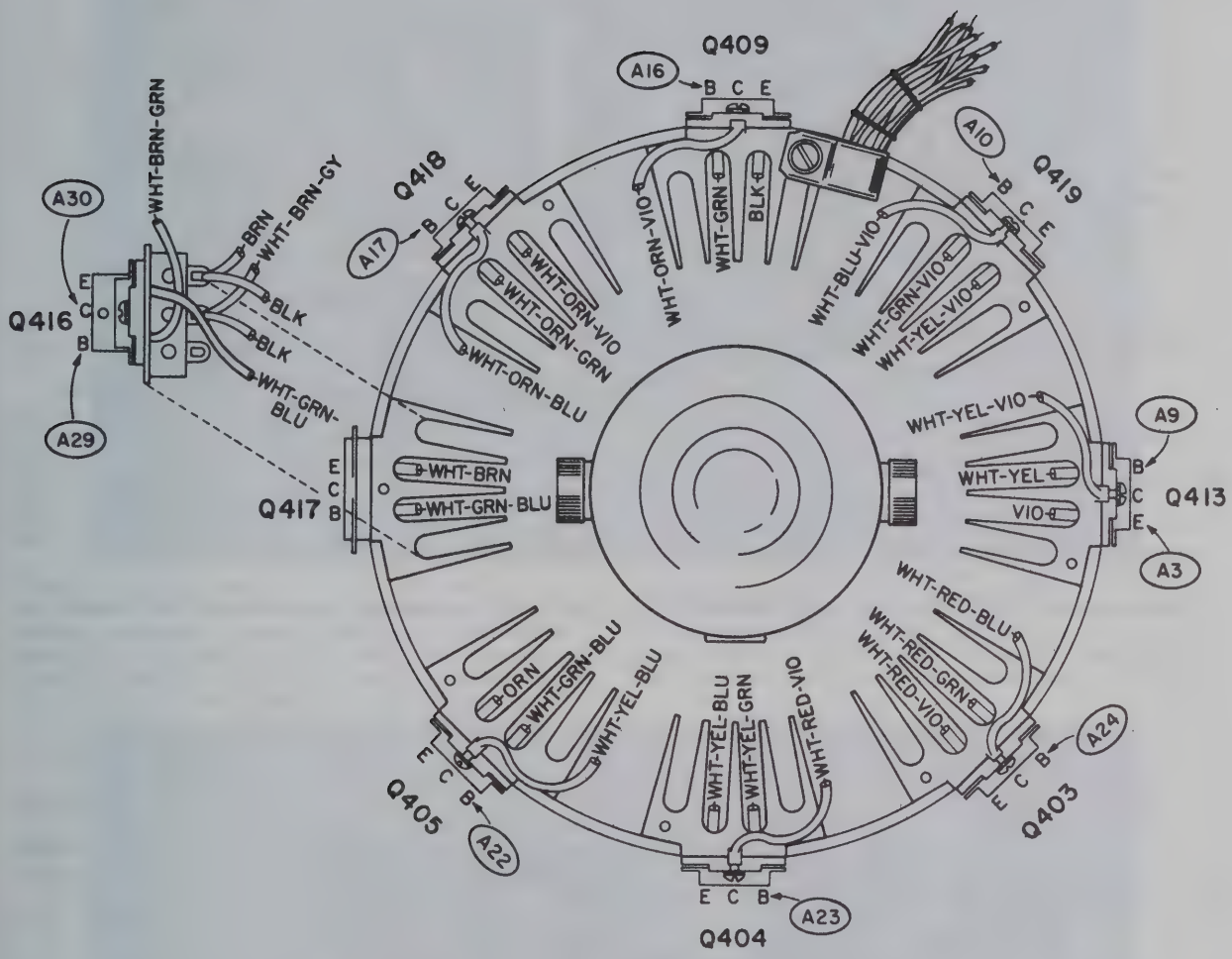

Figure 4-20. Fan Shroud and Power Transistor Assembly, Location of Test Points and Connections

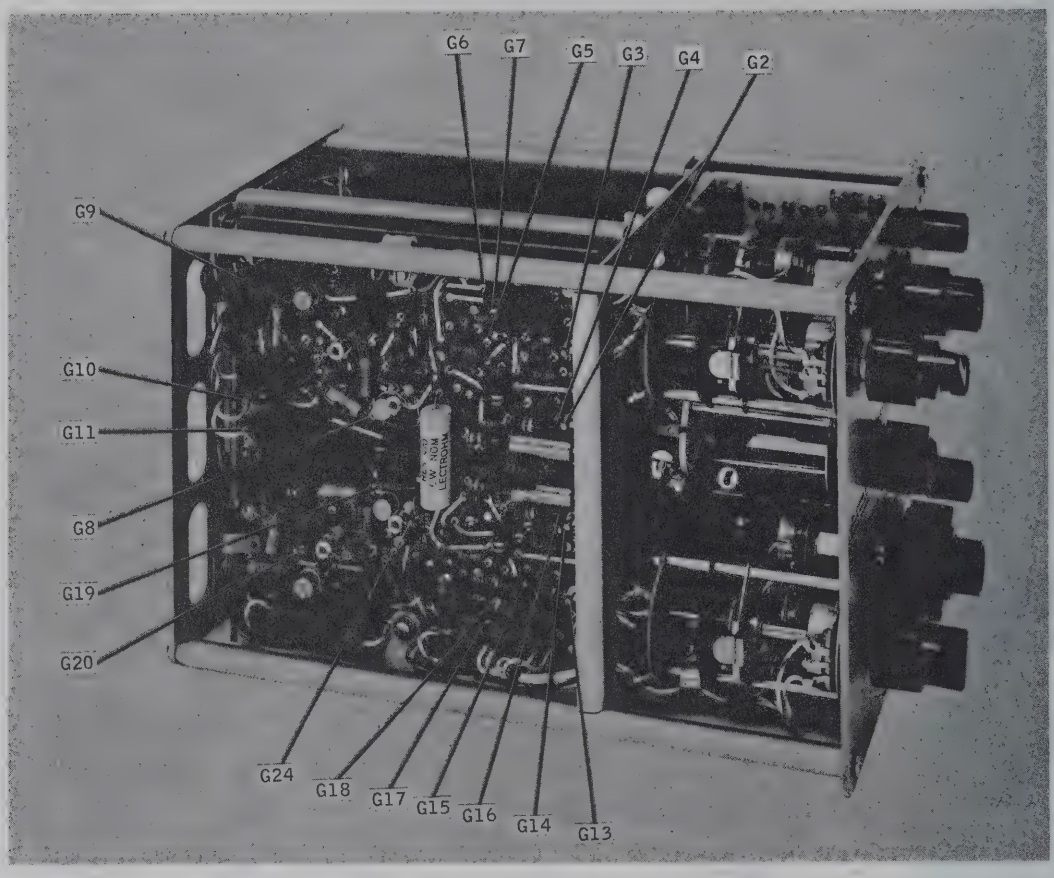

Figure 4-21. Left Side View of MX-2930B/USM Vertical Plug-In Assembly, Location of Test Points

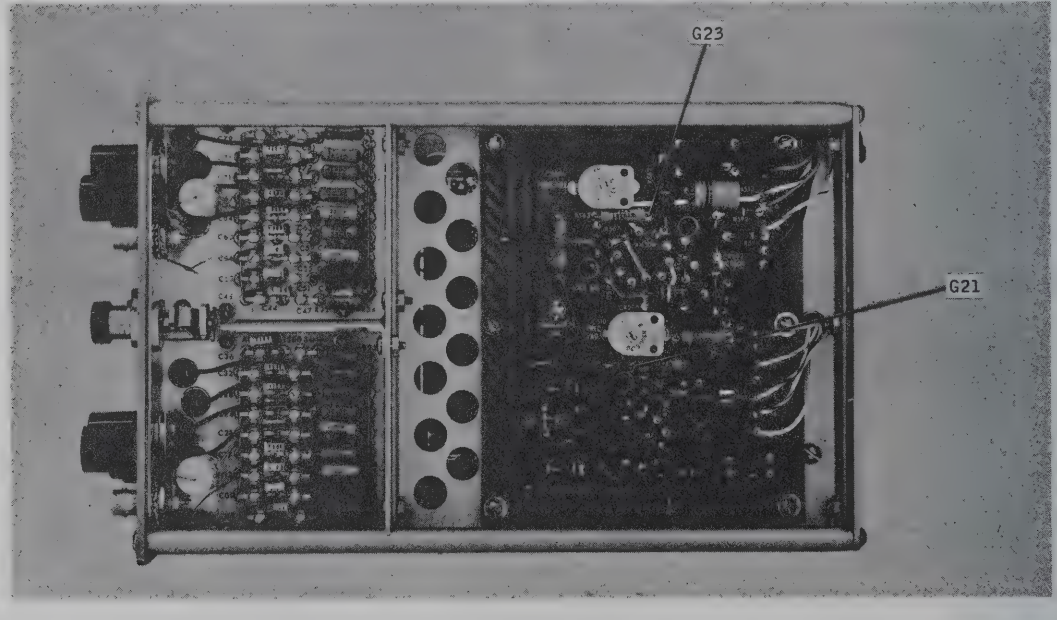

Figure 4-22. Right Side View of MX-2930B/USM, Location of Test Points

SECTION 5

MAINTENANCE

5-1. FAILURE, AND PERFORMANCE AND OPERATIONAL REPORTS.

Note

The Bureau of Ships no longer requires the submission of failure reports for all equipments. Failure Reports and Performance and Operational Reports are to be accomplished for designated equipments (refer to Electronics Installation and Maintenance Book, NAVSHIPS 900,000) only to the extent required by existing directives. All failures shall be reported for those equipments requiring the use of Failure Reports.

5-2. PREVENTIVE MAINTENANCE.

Preventive maintenance consists mainly of cleaning the air filter and checking the fan motor brushes. In addition the instrument should be given a periodic visual inspection for potential sources of trouble, which should include inspection for loose switch knobs, unseated vacuum tubes, loose or frayed wires, burned or bulging components, etc.

a. SERVICING THE AIR FILTER. - The air filter is located on the rear of the instrument cabinet. Inspect the filter bi-weekly and clean it as often as necessary. Monthly cleaning is sufficient in normal operating environments; when the instrument is used in extremely dusty environments, the filter must be cleaned more often. Proceed as follows:

(1) Remove filter by pushing it down and pulling on its top edge.

(2) Wash filter in warm water and detergent; then dry it thoroughly.

(3) Prepare and maintain a maintenance check-off list for the air filter, using the following format:

WEEK OF	AIR FILTER	
	CLEANING NOT REQUIRED	CLEANED

b. FAN MOTOR. - Every six months, add one or two drops of 10-weight machine oil to the motor bearings. The motor can be lubricated through the access hole in the right side gusset when the gusset cover plate is removed. This plate is secured by two screws. Also inspect the motor brushes and replace them when they are worn to 3/16 inch in length. Proceed as follows:

(1) Remove the cabinet for access to the fan, by resting the oscilloscope front panel down, supported by the guard rails, and removing the four retaining screws from the rear, allowing the cabinet to be lifted off.

(2) Remove the eight fan shroud screws and open the motor supporting strap.

(3) Slip the entire fan, shroud, and motor out the rear of the chassis, noting cable dress and shroud position. See figures 4-20 and 5-10. Twist slightly to give transistors clearance.

(4) Remove and inspect the brushes. Clean, replace, and dress as necessary. Brushes should be contoured to fit commutator to minimize arcing and bounce. Use air pressure to blow dust from brush holders and fan case.

(5) Add one or two drops of SAE 10 machine oil to motor bearings. Wipe off excess oil to avoid dust coating.

(6) Prepare and maintain a maintenance check-off list for the fan motor, using the following format:

MONTH	FAN MOTOR BRUSHES	BEARINGS
	REPLACEMENT REPLACED NOT REQD	LUBRICATED

(7) To reinstall assembly, reverse the above procedure. In AN/USM-140B or AN/USM-141A, position the heat sink bracket (with two transistors) at 3 o'clock and position fan motor leads in notch of motor bracket. In AN/USM-140C or AN/USM-141B, position the access port in the fan shroud at 6 o'clock.

5-2A. WIRING COLOR CODE.

Where color coding is not the same in all models, the color code is shown in parentheses for Model AN/USM-140C.

5-3. REFERENCE STANDARDS PROCEDURES.

Note

The procedures listed below constitute the minimum number of reference standards which will indicate, when completed, the relative performance of the oscilloscope and its plug-in units. Each group of tests represents a functional section of the instrument. The procedures are listed in the suggested sequence of performance, and the power supply test must always be performed first, as indicated, to assure that all units are being supplied proper power. Otherwise, however, deviation from the listed order will in no way affect the unity or result of the reference standards.

TABLE 5-1. REFERENCE STANDARDS PROCEDURES

SECTION	ACTION REQUIRED	PROCEDURE STEPS
Power Supply (Table 5-3)	Check DC voltages	(step 1)
	AC ripple voltages	(step 2)
Calibrator (Table 5-4)	Check voltage amplitude	(step 3)
	Check voltage divider	(step 4)
Horizontal Amplifier (Table 5-5)	Check sensitivity	(steps 5 and 6)
	Check bandwidth	(step 7)
Sweep Generator (Table 5-6)	Check sweep time	(step 8)
	Check trigger sensitivity	(step 9)
Vertical Amplifier (Table 5-7)	Check sensitivity	(step 10)
	Check bandwidth	(step 11)
	Check rise time	(step 12)
MX-2930B/USM Vertical Plug-In (Table 5-8)	Check vertical sensitivity	(steps 13 and 14)
	Check vertical pulse response	(step 15)
	Check vertical bandwidth	(step 16)
	Check isolation	(step 17)
	Check common mode rejection	(step 18)
	Check chopped display	(step 19)
	Check alternate display	(step 20)

Test equipment required to complete the Reference Standards Procedures is listed in table 5-2. Figure 5-1 shows the test connector that must be fabricated to allow test of the main vertical amplifier with the vertical channel plug-in unit removed.

TABLE 5-2. TEST EQUIPMENT FOR REFERENCE STANDARDS PROCEDURES

DESIGNATION	NAME
Model 738A	Voltmeter Calibrator (Hewlett-Packard)
AN/USM-108	Time-Mark Generator
Model 107	Square Wave Generator (Tektronix)
Model 190A	Constant-Amplitude Signal Generator (Tektronix)
AN/USM-98	Voltmeter
ME-30/U	AC Voltmeter

NOTE: See table 1-2 for full description.

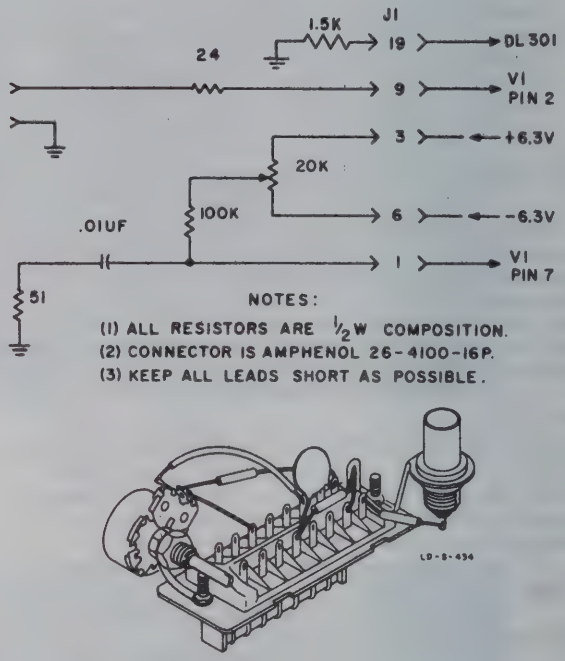

Figure 5-1. Main Vertical Amplifier Test Connector

TABLE 5-3. POWER SUPPLY

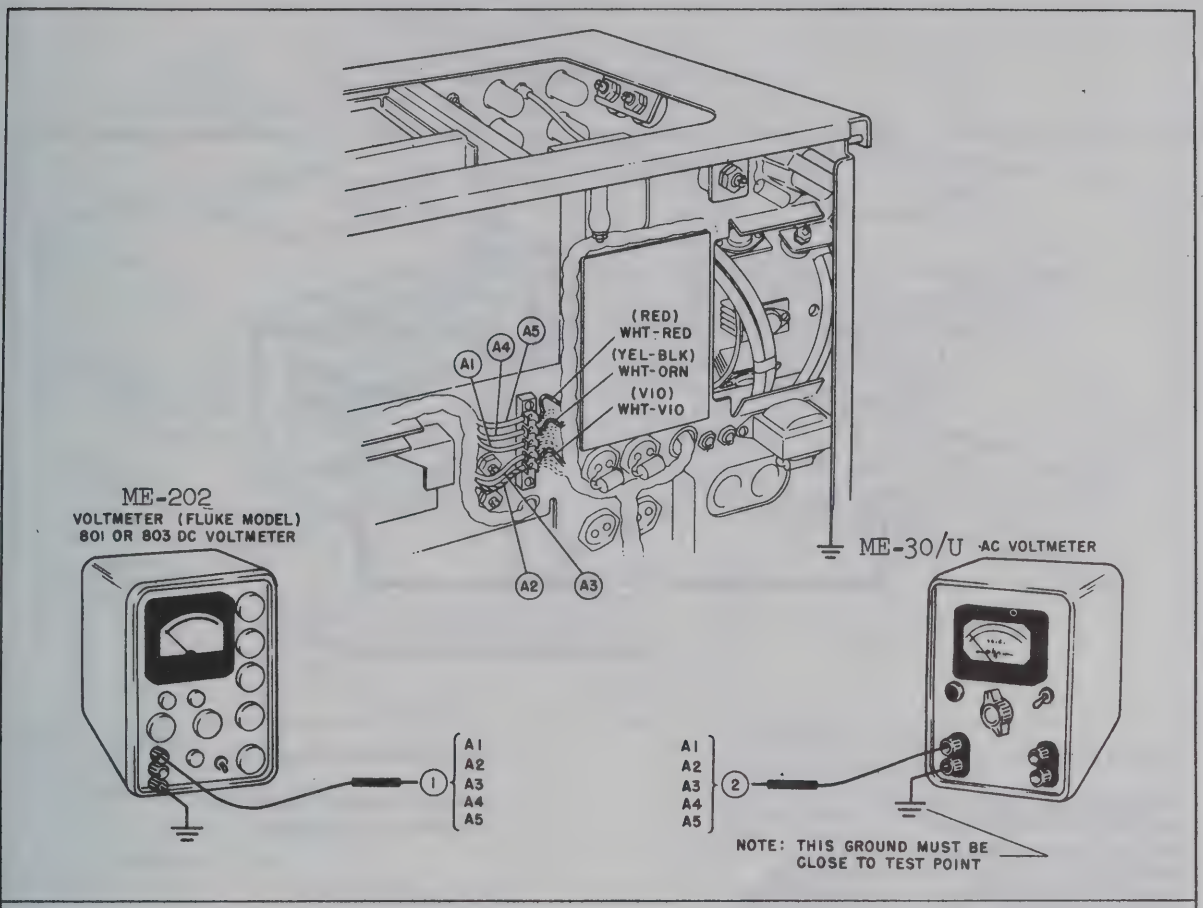

Control Settings:

Power on
Chassis Grounded

Test Equipment Required:

AN/USM-98 Voltmeter
ME-6/U AC Voltmeter

STEP NO.	ACTION REQUIRED	READ INDICATION ON	PERFORMANCE STANDARDS
1	Check DC voltages	AN/USM-98 Voltmeter	A1 +6.3 volts ±1 volt A2 -6.3 volts ±1 volt A3 -100 volts ±0.4% A4 +110 volts ±0.4% A5 +370 volts ±1%
	PROCEDURE: Remove the Oscilloscope from the cabinet (see paragraph 5-2b) and ground the chassis. Turn the instrument ON and allow a few minutes warmup. Ground an AN/USM-98 Voltmeter to the chassis and measure the voltages at the test points shown in table 5-3.		
2	Check AC ripple voltage	ME-6/U AC Voltmeter	A1 7 MVAC A2 7 MVAC A3 3 MVAC A4 7 MVAC A5 18 MVAC
	PROCEDURE: Disconnect the AN/USM-98 Voltmeter and ground a ME-6/U AC Voltmeter to the chassis. Measure the ripple voltages at the test points shown in table 5-3. The AC ripple should be as listed at the right. These voltages are greater than the typical voltages listed on the schematic and are the maximum allowable.		

TABLE 5-4. CALIBRATOR

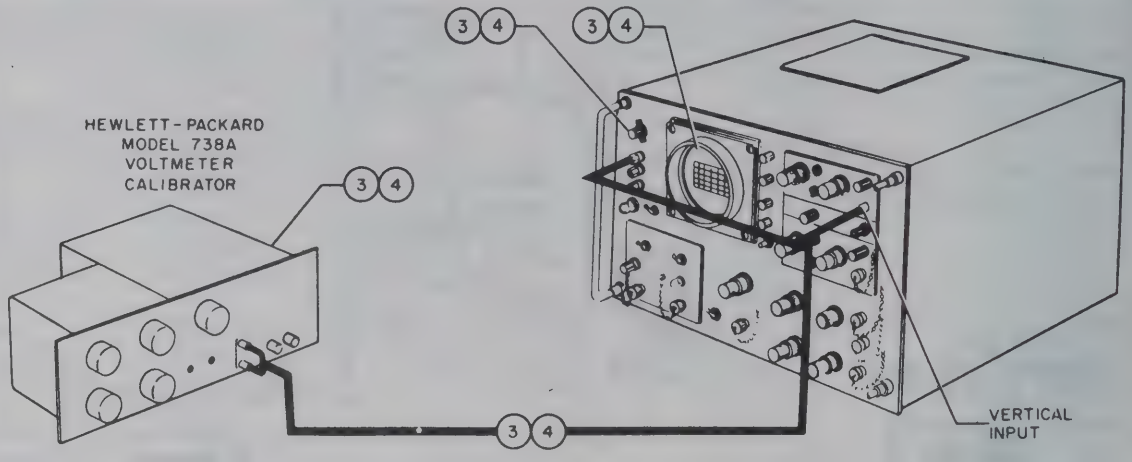

Control Settings:

HORIZONTAL DISPLAY to X1
TRIGGER SOURCE to INT
SWEEP MODE to PRESET
SWEEP TIME to 2 MILLISECONDS/CM
VERTICAL SENSITIVITY to 2 VOLTS/CM
CALIBRATOR to OFF

Test Equipment Required:

Hewlett-Packard Model 738A
Voltmeter Calibrator

STEP NO.	ACTION REQUIRED	READ INDICATION ON	PERFORMANCE STANDARDS
3	Check amplitude of CALIBRATOR voltage	Oscilloscope	The amplitudes of the square wave and sine wave should not differ by more than 3%
	PROCEDURE: Set the Voltmeter Calibrator for a 10-volt, 400-cycle peak-to-peak output, and connect this signal to the vertical INPUT. Set sensitivity vernier for 4cm amplitude of the sine wave on the CRT. Leave vernier at this setting, disconnect the Voltmeter Calibrator, set the CALIBRATOR control at 10-volt output, and connect the CALIBRATOR output at VOLTS to the vertical INPUT. Note the exact amplitude of the square wave.		
4	Check CALIBRATOR voltage divider	Oscilloscope	Same as above
	PROCEDURE: Check all the CALIBRATOR voltage ranges by comparing equal voltages from the CALIBRATOR output and from the Voltmeter Calibrator. Use the same procedure as above.		

TABLE 5-5. HORIZONTAL AMPLIFIER

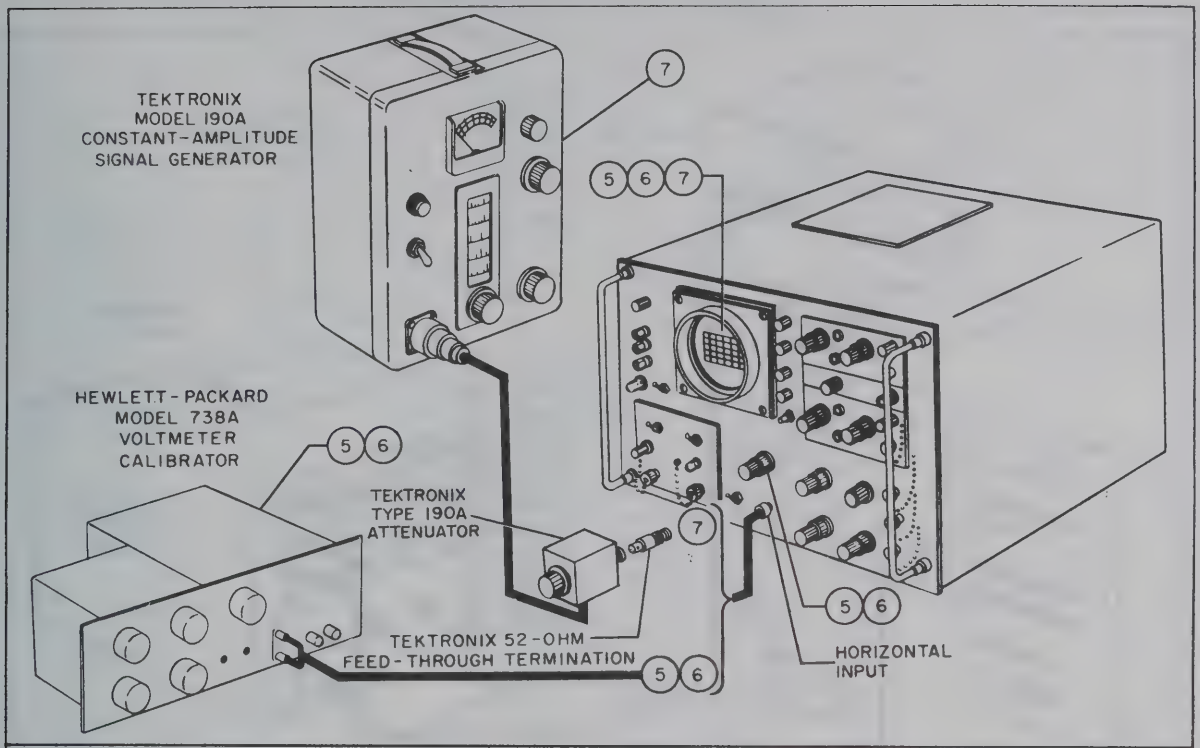

Control Settings:
AC-DC SWITCH to AC
EXTERNAL VERNIER to CAL

Test Equipment Required:
Hewlett-Packard Model 738A
Voltmeter Calibrator
Tektronix Model 190A Constant-Amplitude
Signal Generator

STEP NO.	ACTION REQUIRED	READ INDICATION ON	PERFORMANCE STANDARDS
5	Check horizontal sensitivity	Oscilloscope	A. Trace extends 10 ±0.3 cm B. Trace extends 5 ±0.15 cm
	PROCEDURE: Connect 1 volt peak-to-peak from Voltmeter Calibrator to horizontal INPUT. Adjust position controls to center horizontal trace. A. Set HORIZONTAL DISPLAY to .1 VOLTS/CM B. Set HORIZONTAL DISPLAY to .2 VOLTS/CM		
6	Check horizontal sensitivity range	Oscilloscope	A. Trace extends 10 ±0.3 cm B. Trace extends 5 ±0.15 cm
	PROCEDURE: With the test set-up as in step 13, increase the voltages from the Voltmeter Calibrator to 10 times the voltage shown on the HORIZONTAL DISPLAY switch. The CRT should show trace A. When the HORIZONTAL DISPLAY switch is moved to the next higher setting, the CRT should show trace B. Repeat this procedure in sequence for the entire range of the HORIZONTAL DISPLAY switch.		
7	Check horizontal bandwidth	Oscilloscope	The frequency at which the deflection on the CRT decreased to 7.1 cm (3 db point) should be greater than 1 mc.
	PROCEDURE: Reset HORIZONTAL DISPLAY to .1 VOLTS/CM and disconnect the Voltmeter Calibrator. Center spot with the positioning controls and BEAM FINDER if necessary. Connect 50-kc output from Signal Generator to the horizontal INPUT of the Oscilloscope. Adjust 50-kc amplitude for 10-cm deflection on the CRT. Increase the frequency from the Signal Generator and note the deflection on CRT.		

TABLE 5-6. SWEEP GENERATOR

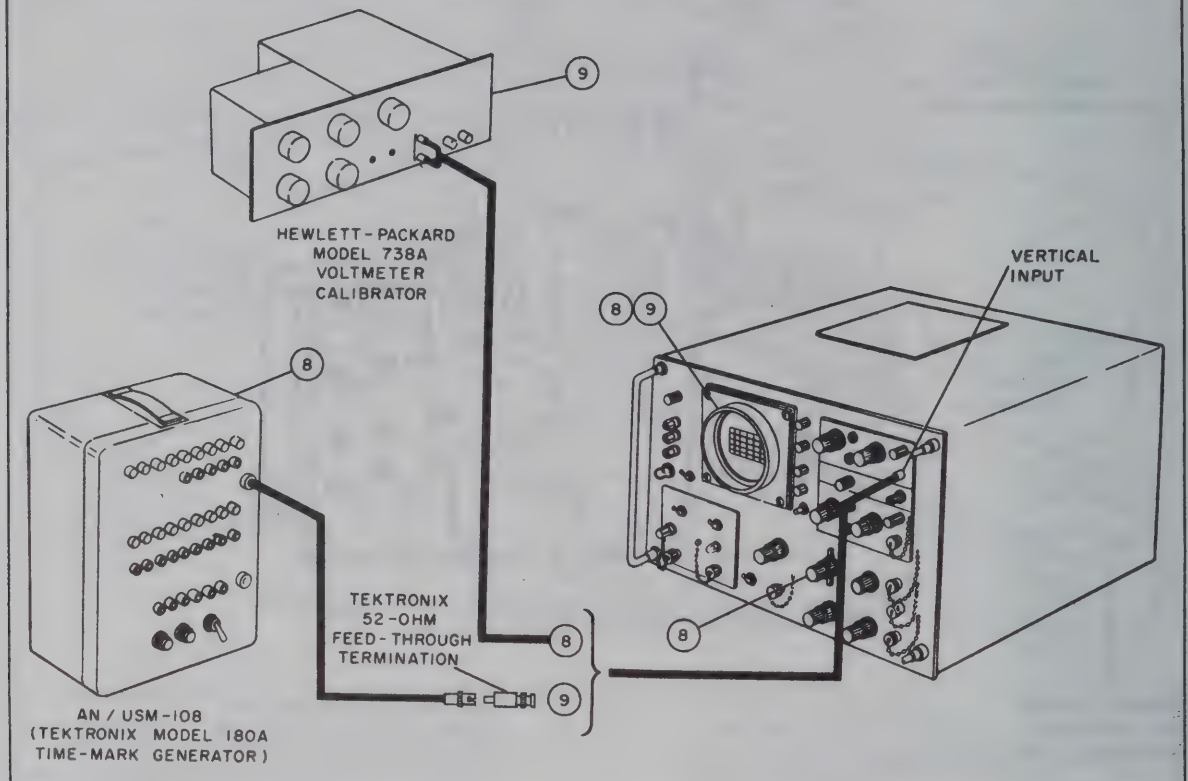

Control Settings:

HORIZONTAL DISPLAY to X1
TRIGGER SOURCE to INT
SWEEP MODE to TRIGGER
SWEEP TIME to 1 MICROSECOND/CM
Adjust VERTICAL SENSITIVITY for 1-CM Deflection

Test Equipment Required:

AN/USM-108 Time-Mark Generator
Hewlett-Packard Model 738A Voltmeter Calibrator

STEP NO.	ACTION REQUIRED	READ INDICATION ON	PERFORMANCE STANDARDS
8	Check sweep time	Oscilloscope	1 marker per 1 cm ±3% in each case
	PROCEDURE: Connect 1-μsec time marks from Time-Mark Generator to vertical INPUT, check that the SWEEP TIME control is 1 MICROSECOND/CM, and note the CRT display. Change the SWEEP TIME control to 1 MILLISECOND/CM and then to 1 SECOND/CM and simultaneously set the Time-Mark Generator to produce the corresponding time markers (i.e., 1 millisecond markers and 1 second markers).		
9	Check sweep trigger sensitivity	Oscilloscope	Sweep triggered without jitter
	PROCEDURE: Disconnect the Time-Mark Generator. Change the VERTICAL SENSITIVITY control to 1 VOLT/CM, the VERNIER to CALIBRATED, the SWEEP TIME to 1 MILLISECOND/CM, SWEEP MODE to PRESET, and TRIGGER LEVEL to 0. Connect a 0.2-volt peak-to-peak signal from the Voltmeter Calibrator to the vertical INPUT.		

TABLE 5-7. MAIN VERTICAL AMPLIFIER

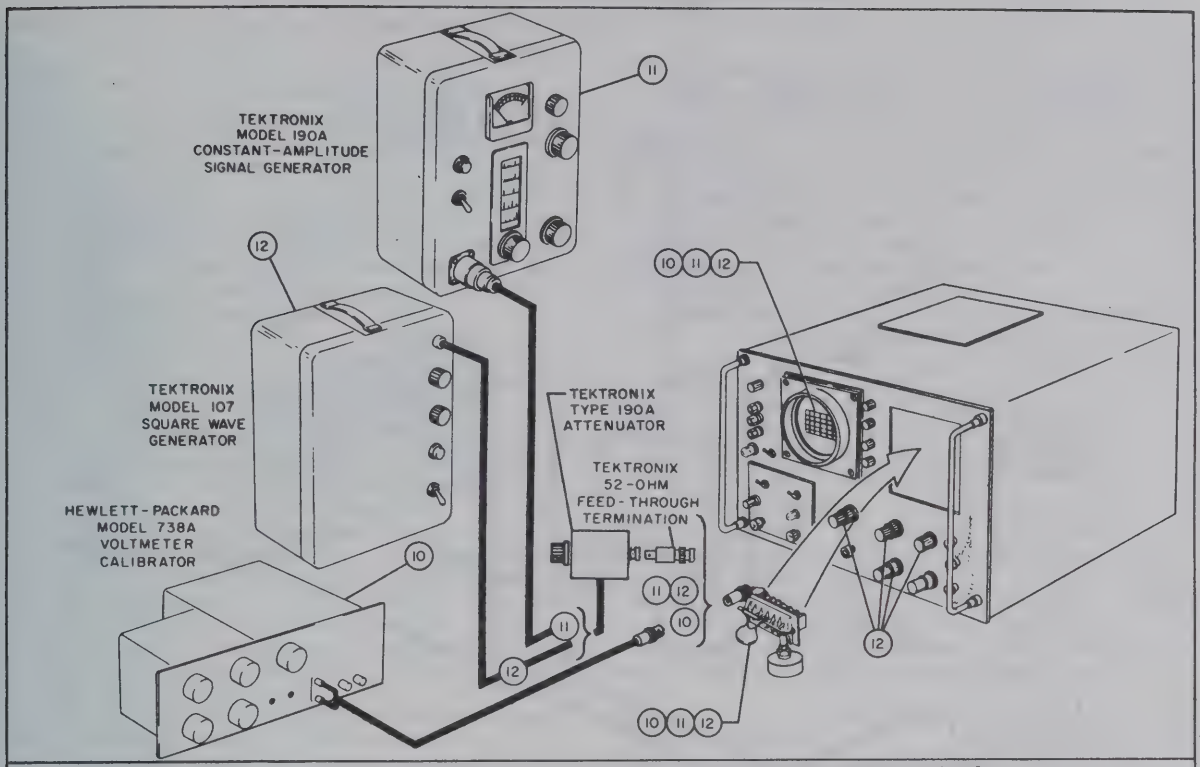

Control Settings:
Remove Vertical Plug-In and Insert Test Connector (See Figure 5-1)
HORIZONTAL DISPLAY to X1
SWEEP TIME to 2 MILLISECONDS/CM
TRIGGER SOURCE to INT
SWEEP MODE to PRESET
TRIGGER LEVEL to 0

Test Equipment Required:
Hewlett-Packard Model 738A Voltmeter Calibrator
Tektronix Model 190A Constant-Amplitude Signal Generator
Tektronix Model 107 Square Wave Generator

STEP NO.	ACTION REQUIRED	READ INDICATION ON	PERFORMANCE STANDARDS
10	Check Main Vertical Amplifier sensitivity	Oscilloscope	Peak-to-peak deflection of 4 ±0.2 cm
	PROCEDURE: Connect a 400-cps, 0.8-volt peak-to-peak signal from the Voltmeter Calibrator to the Main Vertical Amplifier through the test connector.		
11	Check Main Vertical Amplifier bandwidth	Oscilloscope	Frequency at which deflection on CRT decreases to 2.8 cm (3 db point) should be greater than 35 mc
	PROCEDURE: Connect the 50-kc output from the Signal Generator to the Main Vertical Amplifier through the test connector. Adjust the 50-kc amplitude for a 4-cm deflection on the CRT. Increase the frequency from the Signal Generator and note the deflection on the CRT.		
12	Check Main Vertical Amplifier rise time	Oscilloscope	Rise time (10-90%): 11 nsec (0.55 cm) or less
	PROCEDURE: Set the HORIZONTAL DISPLAY to X5, SWEEP TIME to .1 MICROSECOND/CM, and TRIGGER LEVEL to +. Connect a 1-mc, 0.5-volt square wave from the Square Wave Generator to the Main Vertical Amplifier through the test connector. Center the leading edge of the square wave with the control on the test connector and the HORIZONTAL POSITION control. Adjust the TRIGGER LEVEL to shift the leading edge of the square wave as far to the right as possible.		

TABLE 5-8. MX-2930B/USM VERTICAL PLUG-IN

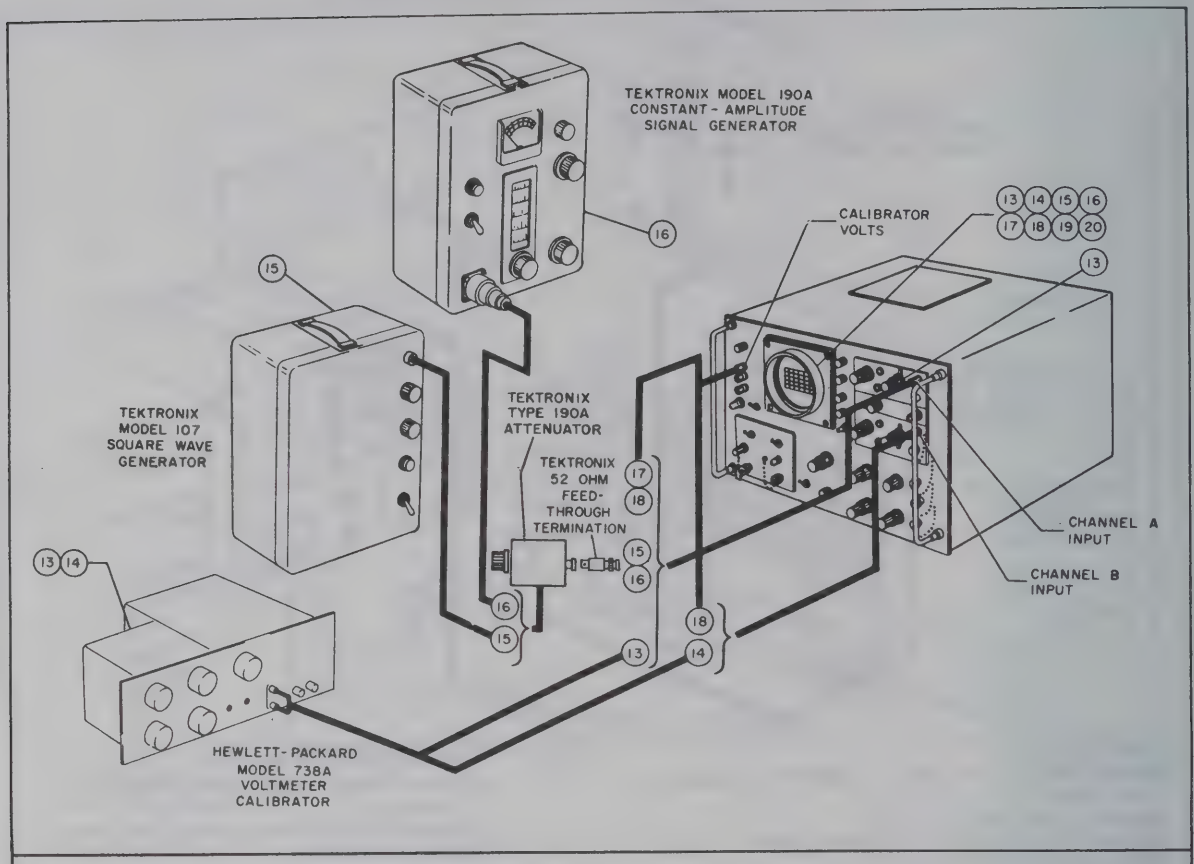

Control Settings:

CHANNEL A + B VERNIER to CAL
AC-DC SWITCH to AC
Vertical Presentation Switch to CHANNEL A
SWEEP MODE to PRESET
SWEEP TIME to 5 MILLISECONDS/CM
SENSITIVITY CONTROL VERNIER to CALIBRATED
TRIGGER SOURCE to INT

Test Equipment Required:

Hewlett-Packard Model 738A Voltmeter Calibrator
Tektronix Model 107 Square Wave Generator
Tektronix Model 190A Constant-Amplitude Signal Generator

STEP NO.	ACTION REQUIRED	READ INDICATION ON	PERFORMANCE STANDARDS
13	Check Channel A vertical sensitivity	Oscilloscope	A. 5 ±0.25 cm (±5%) deflection B. Deflection should be [output voltage / SENSITIVITY = cm] with a tolerance of 5% in each case
	PROCEDURE Set the Voltmeter Calibrator to 400-cycle 0.1-volt peak-to-peak output and couple this signal to the Channel A INPUT. Set the SENSITIVITY control to .02 VOLTS/CM. CRT deflection should be as in A. Repeat this check at each position of the SENSITIVITY control. Set the Voltmeter Calibrator output as necessary to provide adequate deflection on the CRT. Performance should be as in B.		
14	Check Channel B vertical sensitivity	Oscilloscope	Same as above
	PROCEDURE: Same as above, except Vertical Presentation Switch to CHANNEL B and Voltmeter Calibrator to Channel B INPUT.		

TABLE 5-8. (Continued)

STEP NO.	ACTION REQUIRED	READ INDICATION ON	PERFORMANCE STANDARDS
15	Check vertical pulse response	Oscilloscope	Overshoot on leading edge of applied signal must not exceed 3%.
	PROCEDURE: Change SWEEP TIME control to 0.2 MICROSECOND/CM and Channel A SENSITIVITY to 0.02 VOLTS/CM. Set the Square Wave Generator to produce a 0.25-volt AC peak-to-peak 500-kc signal and couple this to the Channel A INPUT. Change the Vertical Presentation Switch back to CHANNEL A. Repeat for CHANNEL B.		
16	Check vertical bandwidth	Oscilloscope	The frequency must be at least 22 mc when the deflection is 2.8 cm
	PROCEDURE: Set the SENSITIVITY control to .02 VOLT/CM, the HORIZONTAL DISPLAY switch to X1, and connect a 50-kc sine wave from a Constant-Amplitude Signal Generator to the Channel A INPUT. Adjust the input signal level for a CRT deflection of exactly 4 centimeters. Without changing the signal level, increase the signal frequency until the height of the display is reduced to 2.8 centimeters. Repeat for CHANNEL B.		
17	Isolation check	Oscilloscope	The height of CRT display should not exceed 0.3 cm
	PROCEDURE: Disconnect the Square Wave Generator. Change the Vertical Presentation switch to CHANNEL B, the SENSITIVITY control to 0.5 VOLT/CM on Channel A and .02 VOLT/CM on Channel B, the HORIZONTAL DISPLAY to X1, the SWEEP TIME control to 1 MILLISECOND/CM, and center the display with the VERTICAL POSITION control. Apply a 20-volt square wave to Channel A INPUT from the CALIBRATOR output. After noting the deflection, check the reverse coupling by reversing the settings and connection of Channels A and B and their controls.		
18	Common mode rejection check	Oscilloscope	A&B SENSITIVITY / Input Voltage / Deflection (cm) .02 / 2 / 1 .05 / 5 / 3 .10 / 10 / 3 .20 / 20 / 3 .50 / 50 / 3 1 / 100 / 3 2 / 100 / 1.5 5 / 100 / 0.6 10 / 100 / 0.3 20 / 100 / 0.15
	PROCEDURE: Connect the output of the CALIBRATOR to Channel A and B INPUTS in parallel (through a T-connector). Change the Vertical Presentation Switch to A-B, the AC-DC switch to DC, and keep the HORIZONTAL DISPLAY switch at X1. Measure the common mode rejection on all SENSITIVITY ranges and note that the deflections correspond to the table at the right.		
19	Chopped display check	Oscilloscope	The chopped period should be between 0.9 and 1.1 microsecond. The transition between the chopped traces should be blanked out at normal intensity levels
	PROCEDURE: Remove all connections from the INPUT jacks. Set the Vertical Presentation Switch to CHOPPED, the SWEEP TIME control to .5 MICROSECOND/CM, and adjust the VERTICAL POSITION control for two distinct chopped traces. There should be no signal at any input to the Oscilloscope.		
20	Check on alternate display	Oscilloscope	The display should show two distinct traces throughout the sweep range
	PROCEDURE: With the Oscilloscope setup as in step 19, change the Vertical Presentation Switch to the ALTERNATE position. Vary the SWEEP TIME from 20 MILLISECONDS/CM to 0.1 MICROSECONDS/CM.		

5-4. ADJUSTMENTS.

The procedures below give instructions for complete calibration to insure optimum equipment performance. However, complete calibration is seldom required, and the adjustment for any one particular section can be performed separately if the other sections are known to be calibrated and operating correctly. Table 3-4 lists the adjustments required following replacement of individual tubes, diodes, and transistors. Whether complete or partial calibration is to be done, make the adjustments in the sequence in which they are given below, since the adjustments on one section may influence the performance of another section. For cabinet removal procedure, see paragraph 5-2b.

Test equipment and special tools required to complete the adjustments are listed in table 5-9. Equipment with similar specifications can be substituted for that listed. The special vertical test connector shown in figure 5-1 is required to apply signals directly to the main vertical amplifier. The connector makes the frequency response adjustment in the main vertical amplifier independent of the plug-in units.

a. LOW-VOLTAGE POWER SUPPLY ADJUSTMENT. - Location of adjustments in the low-voltage supply is shown in figure 5-2. Test points are shown in table 5-3 and figure 4-14.

CAUTION

Never allow any power supply voltage to short directly to ground or to another circuit. Such a short will destroy the power supply transistors instantaneously.

(1) -100 VOLT SUPPLY. Adjust -100V Adj, R452, for exactly - 100 volts at test point A3 white-violet (or violet/white).

(2) ±6.3 VOLT SUPPLY.

(a) Adjust 6.3V Adj, R464, for +6.3 volts at test point A1 brown wire.

(b) Check for -6.3 volts ±0.1 volt at test point A2 white-brown (or gray) wire. Any unbalance is due to unbalance in tube heaters. If the unbalance is excessive, it can be remedied by changing vacuum tubes.

(3) +110 VOLT SUPPLY. Adjust +110V Adj, R431, for exactly +110 volts at test point A4 white-orange (or yellow brown) wire.

(4) +370 VOLT SUPPLY. Adjust +370V Adj, R411, for +370 volts at test point A5 white-red (or red/orange) wire.

b. HIGH-VOLTAGE POWER SUPPLY ADJUSTMENT. - Location of the adjustment for the -1500-volt-high-voltage power supply is shown in figure 5-3. Test points are shown in figure 4-15.

WARNING

Dangerous voltages will be encountered in the following procedure. Use extreme caution and follow the directions exactly.

(1) Remove the shield from the high-voltage power supply which is accessible through the left-side gusset.

(2) Turn on the oscilloscope and allow a 5-minute warm-up period.

(3) Connect the high-voltage voltmeter (AN/USM-116) between ground and test point B1, V310 plate cap). The voltmeter should indicate -1500 volts. If not, recheck the oscilloscope low-voltage power supply before continuing.

(4) If necessary, adjust R321 to produce exactly - 1500 volts. After making this adjustment, it will be necessary to recheck horizontal and vertical gains, frequency response, and sweep times.

TABLE 5-9. TEST EQUIPMENT FOR ADJUSTMENT PROCEDURES

DESIGNATION	NAME
AN/USM-98	Voltmeter
AN/USM-116	High-Voltage Voltmeter
Model 738A	Voltmeter Calibrator (Hewlett-Packard)
Model 107	Square Wave Generator (Tektronix)
AN/USM-108	Time-Mark Generator
AN/URM-90	Q Meter

NOTE: See table 1-2 for full description

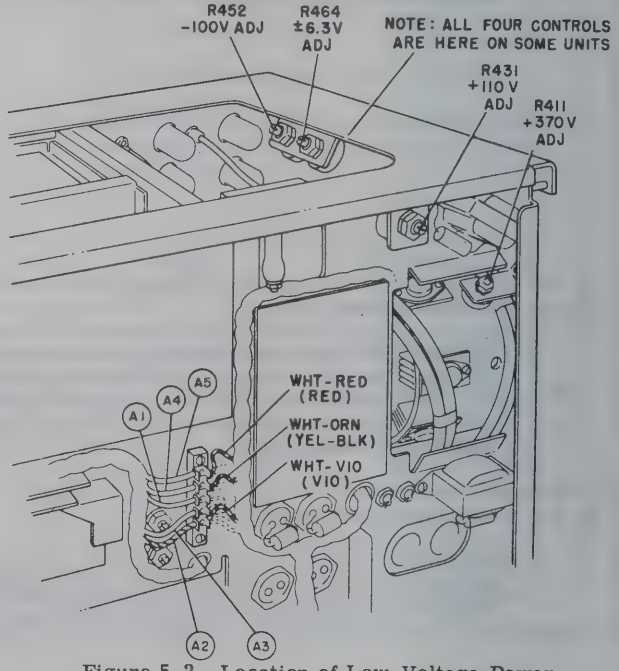

Figure 5-2. Location of Low-Voltage Power Supply Adjustments

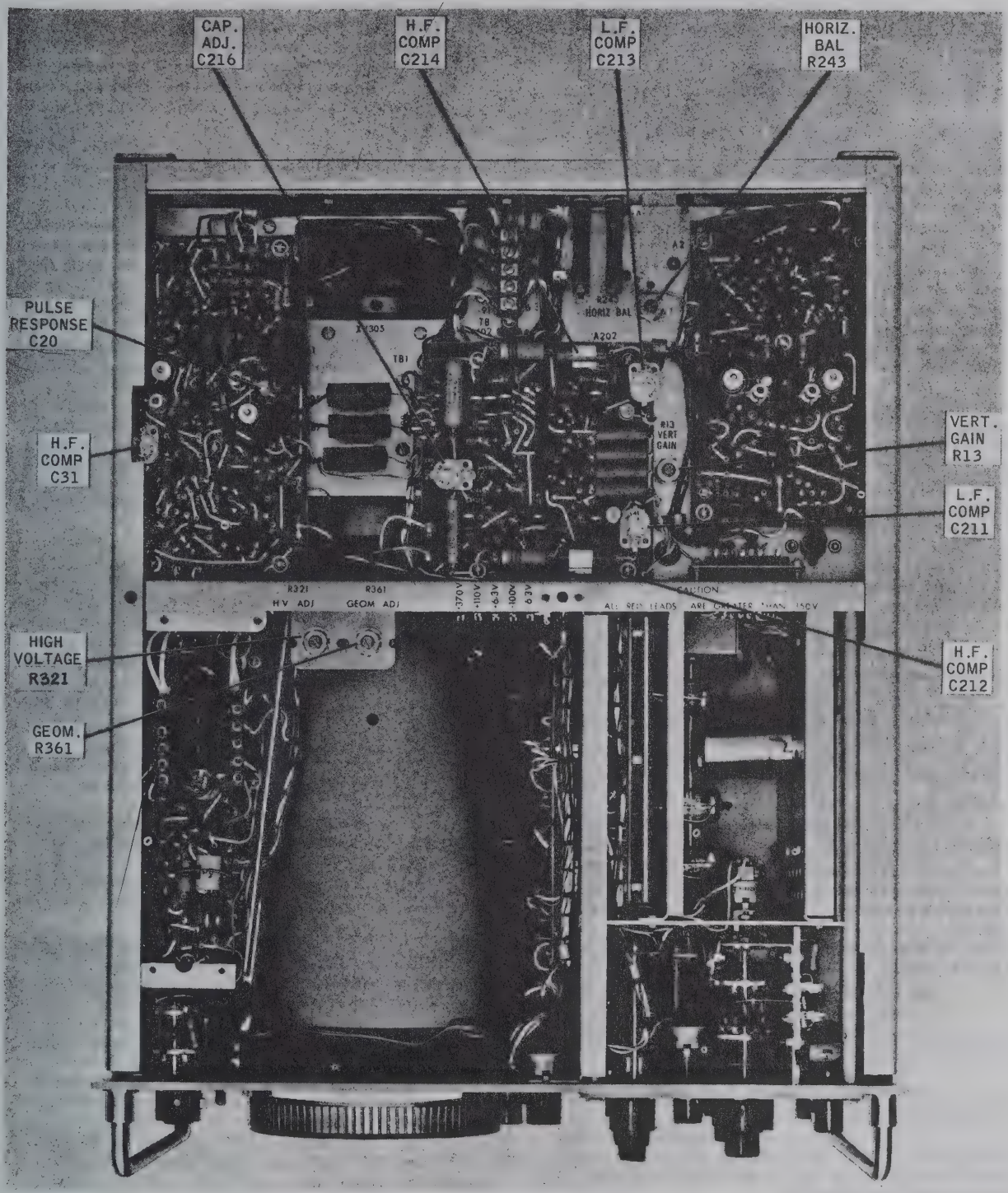

Figure 5-3. Top View, Location of Adjustments

c. GEOMETRY ADJUSTMENT. - The geometry adjustment control (R361) sets the voltage applied to the CRT grid (pin 4) for minimum deflection distortion at the edges of the graticule. Before making any adjustments, check that the CRT trace is properly aligned with the graticule.

(1) With the MX-2930B/USM Vertical Plug-In installed, apply a signal from the amplitude CALIBRATOR to the vertical INPUT. Set the SWEEP MODE control just out of PRESET and position the vertical trace (4-cm high) parallel and next to the left edge of the graticule. Note any nonlinearity and reposition the display at the right edge of the graticule. Again note any nonlinearity in the display. Remove all vertical input signals, and set the SWEEP MODE control to FREE RUN. Position the trace (10-cm long) alternately at the top and the bottom of the graticule, noting in each case any deviations from a straight line trace as compared to the graticule edge.

(2) If there is excessive distortion in the vertical or horizontal traces, change the adjustment of the Geometry control, R361, to correct this. The trace should be moved from one end to the opposite end of the graticule both horizontally and vertically to compare the effects of any adjustments. See figure 5-3 for location of R361.

d. HORIZONTAL AMPLIFIER ADJUSTMENT. - The location of test points and adjustments for the horizontal amplifier are shown in figures 4-16, 4-17, and 5-24. For parts location refer to figure 5-23.

(1) BALANCE. -

(a) Remove oscilloscope cabinet, turn the instrument on and allow a 5-minute warmup.

(b) Set the HORIZONTAL DISPLAY control midway between the INTERNAL SWEEP X1 and the .1 VOLT/CM positions.

(c) Adjust the Balance control R243 (see figure 5-3) to center position the spot in the center of the CRT graticule.

(d) Set the HORIZONTAL DISPLAY control to .1 VOLTS/CM.

(e) Adjust the Vern. Bal. control R211 (see figure 5-4) until the spot remains horizontally stationary as the EXTERNAL VERNIER control is rotated over its full range. If necessary, adjust the HORIZONTAL POSITION control to keep spot approximately centered.

(2) SENSITIVITY. -

(a) With the instrument off, unsolder the yellow wire on the edge of the etched circuit board A101 (see figure 5-17).

(b) Set the HORIZONTAL DISPLAY control to INTERNAL SWEEP X1, and center spot with the HORIZONTAL POSITION control.

(c) Connect a 50-volt peak-to-peak sine wave from a Model 738 Voltmeter Calibrator to the etched circuit board A101 at the point from which the yellow wire was removed.

(d) Turn instrument on, allow a few minutes to warm up, and adjust Sweep Gain, R202 for 5.5-centimeters of deflection. (See figure 5-4).

(e) Set the HORIZONTAL DISPLAY control to INTERNAL SWEEP X100.

(f) Change the 50-volt signal to a 0.5-volt peak-to-peak sine wave from the voltmeter calibrator.

(g) If necessary, adjust the X100 Gain, R223, for 5.5-centimeters of deflection. See figure 5-4 for R223 location. Disconnect the voltmeter calibrator. Reconnect the yellow lead unless the frequency response should also be checked, as in paragraph 5-4d(3).

(h) Set the HORIZONTAL DISPLAY control to .1 VOLTS/CM and the horizontal AC-DC switch to AC.

(i) Connect a 1-volt peak-to-peak sine wave from the voltmeter calibrator to the horizontal INPUT, and, if necessary, adjust the Ext. Gain control, R212 (see figure 5-4), to give 10-centimeters horizontal deflection.

(3) FREQUENCY COMPENSATION. -

(a) Turn instrument off and disconnect yellow lead from circuit board A101, if not already disconnected in previous adjustments.

(b) Connect the 75-ohm output of the Model 211A Square Wave Generator to etched circuit board A101 at the point from which the yellow lead was removed. Connect the 600-ohm output of the Model 211A Square Wave Generator to the TRIGGER SOURCE INPUT connector. SWEEP MODE to PRESET.

(c) Connect the SWEEP OUTPUT connector to the vertical INPUT.

(d) Turn the instrument ON and allow a few minutes warm-up time.

(e) Set the HORIZONTAL DISPLAY control to INTERNAL SWEEP X5 and the SWEEP TIME to .1 MILLISECONDS/CM.

(f) Set the vertical SENSITIVITY control to obtain a vertical sweep trace 4-centimeters long. Set the square wave generator frequency to 4 kc and the output amplitude as necessary to produce a 3-centimeter wide square wave.

(g) Adjust the Sweep Gain Comp trimmer, C201 (see figure 5-4), to flatten the square wave, if necessary.

(h) Set the HORIZONTAL DISPLAY control to X10 and the SWEEP TIME to 5 MICROSECONDS/CM.

(i) Set the square wave generator frequency to 100 kc and the output to give about a 5-centimeter deflection.

(j) Adjust the L.F. Comp capacitors C211 and C213 (see figure 5-3) for an approximately flat-topped square wave, if necessary.

(k) Increase the Cap Driver Adj. trimmer, C216 (see figure 5-3), until some overshoot appears on the left side of square wave; then readjust until this overshoot just disappears.

(l) Increase the square-wave amplitude to maximum and adjust the HORIZONTAL POSITION control until the right side of the square wave is just visible on the left edge of CRT (most of the square wave is off the CRT to the left). Overshoot will appear on square wave.

(m) Readjust the L.F. Comp capacitors C211 and C213 until peak of overshoot is even with top of the square wave.

(n) Disconnect the square wave generator, turn off the oscilloscope, and reconnect the yellow wire to etched circuit board A101.

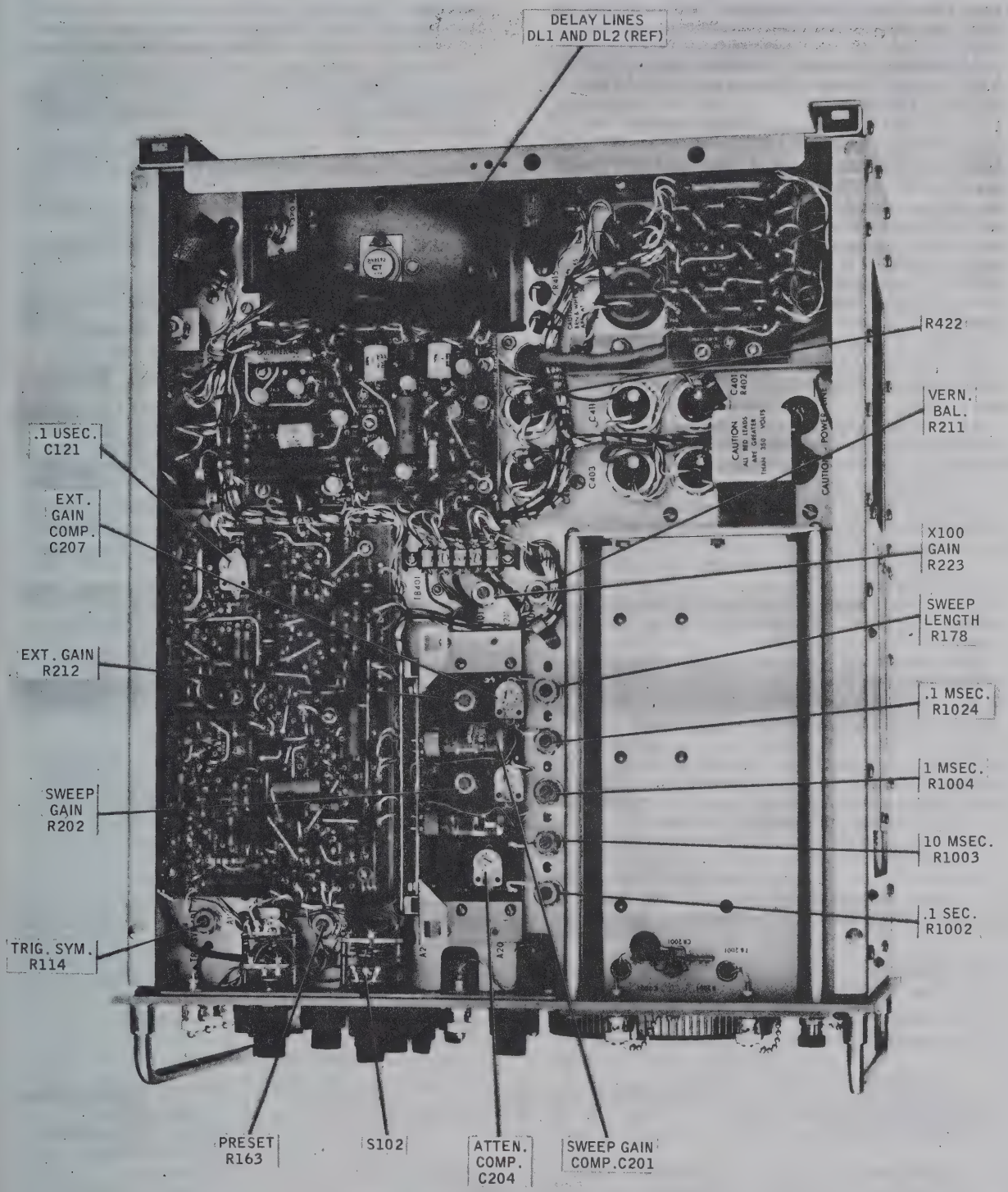

Figure 5-4. Bottom View, Location of Adjustments

(o) Connect a jumper from the junction of R143 and the white/yellow/violet wire on the etched circuit board A101 (see figure 5-17) to test point A3 at the white/violet wire (see figure 5-2).

(p) Turn on the instrument, and set the HORIZONTAL DISPLAY control to .5 VOLTS/CM and the SWEEP TIME control to .1 MILLISECONDS/CM.

(q) Connect the SWEEP OUTPUT to Channel A INPUT.

(r) Connect the 75-ohm output of the square wave generator to the horizontal INPUT, set square wave frequency to 4 kc, and adjust its amplitude to make square wave about five-centimeters wide on CRT.

(s) Set the vertical SENSITIVITY to make the sweep (now vertical) about four-centimeters high.

(t) Adjust the Ext. Gain Comp trimmer, C207 (see figure 5-4), to flatten the square wave, if necessary.

(u) Set the HORIZONTAL DISPLAY control to 1 VOLTS/CM and adjust the square wave generator output to obtain a five-centimeter wide square wave.

(v) Adjust the Atten Comp trimmer, C204 (see figure 5-4), to flatten the square wave, if necessary. Remove the jumper installed in step o.

e. SWEEP GENERATOR ADJUSTMENT. — The location of test points and adjustments in the sweep generator is shown in figures 4-18 and 5-4. For parts location refer to figures 5-10 and 5-17.

(1) PRESET SENSITIVITY AND TRIGGER SYMMETRY. —

(a) Remove the oscilloscope from the cabinet, turn it on, and allow a five-minute warm-up period.

(b) Set the HORIZONTAL DISPLAY control to INTERNAL SWEEP X1 and the SWEEP TIME control to 1 MILLISECONDS/CM or faster.

(c) Measure the voltage at test point D20 (see figure 4-18) while slowly rotating the SWEEP MODE control from just out of PRESET to FREE RUN. Note the voltage at which the sweep starts (meter pointer jumps).

(d) Set the SWEEP MODE control to PRESET.

(e) Set the Preset Adj. control, R163 (see figure 5-4), fully counterclockwise, then turn it clockwise to obtain a voltmeter reading of exactly 1.5 volts less negative than the reading noted in step c.

(f) Set the TRIGGER SOURCE control to INT, the SWEEP MODE control to FREE RUN, the TRIGGER SLOPE control to +, and the SWEEP TIME control to .5 MILLISECONDS/CM.

(g) Connect the CALIBRATOR output to Channel A INPUT and set the Vertical Presentation Switch to CHANNEL A.

(h) Set the CALIBRATOR control, vertical SENSITIVITY control, and sensitivity VERNIER control to obtain 0.2-centimeter vertical deflection.

(i) Ground pin 7 of V101 with a jumper (see figures 5-6 and 5-17).

(j) Set SWEEP MODE control to PRESET and adjust Trig Sym. control, R114 (see figure 5-4), to obtain a triggered sweep. Remove the ground jumper from V101.

(2) SWEEP LENGTH AND SWEEP RATE. —

(a) Set the HORIZONTAL DISPLAY control to INTERNAL SWEEP X1, the SWEEP TIME control to 20 MILLISECONDS/CM, and the SWEEP MODE control to FREE RUN.

(b) Connect the CALIBRATOR output to the vertical INPUT and set the CALIBRATOR and vertical SENSITIVITY to obtain a 5-centimeter vertical deflection.

(c) Adjust the TRIGGER LEVEL control to obtain the shortest possible sweep.

(d) Adjust the Sweep Length control R178 (see figure 5-4) to obtain a sweep trace length exactly 11-centimeters long.

(e) Set the SWEEP MODE control to PRESET and the TRIGGER SOURCE control to EXT. AC.

(f) Connect the AN/USM-108 Time-Mark Generator to the vertical INPUT and connect the time-mark generator trigger output to the TRIGGER SOURCE INPUT.

TABLE 5-10. SWEEP CALIBRATION

Sweep Time	Marker	Adjust	Adjust For
.1 msec/cm	100 μsec	.1 msec Timing R1024	1 marker/cm
1 msec/cm	1 msec	1 msec Timing R1004	1 marker/cm
10 msec/cm	10 msec	10 msec Timing R1003	1 marker/cm
.1 sec/cm	100 msec	.1 sec Timing R1002	1 marker/cm
.1 μsec/cm	10 mc (sine wave)	.1 μsec Timing C121 (on circuit board A101)	1 cycle/cm
.02 μsec/cm (HORIZONTAL DISPLAY set to X5)	10 mc (sine wave)	H. F. Comp C212 and C214 (on circuit board A202)	Adjust to equal values to make signal symmetrical about center line of graticule.
.2 μsec/cm	5 mc (sine wave)	.2 μsec Timing C1016	1 cycle/cm
.5 μsec/cm	1 μsec	.5 μsec Timing C1014	1 marker/2 cm
1 μsec/cm	1 μsec	1 μsec Timing C1012	1 marker/cm
10 μsec/cm	10 μsec	10 μsec Timing C1010	1 marker/cm

(g) Set the vertical SENSITIVITY to obtain easily read vertical deflection of markers.

(h) Refer to table 5-10 to select sweep time and time-mark generator output and to adjust indicated control. See figures 5-4, 5-17, and 5-18, for adjustment locations.

f. MAIN VERTICAL AMPLIFIER ADJUSTMENT. - Location of test points and adjustments in the main vertical amplifier is shown in figures 4-19 and 5-3 and 5-15. For location of parts refer to figures 5-14 and 5-15.

(1) LOW-FREQUENCY GAIN. -

(a) Remove the oscilloscope from the cabinet, turn it ON, and allow a five-minute warm-up.

(b) Remove the vertical plug-in unit and install the test connector shown in figure 5-1.

(c) Connect a 0.8-volt peak-to-peak 400-cps signal from the Model 738A Voltmeter Calibrator to the connector, as shown in table 5-7, step 10; set the oscilloscope controls as follows:

HORIZONTAL DISPLAY to X1
SWEEP TIME to 2 MILLISECONDS/CM
TRIGGER SOURCE to INT
SWEEP MODE to PRESET
TRIGGER LEVEL to 0

(d) Adjust the Vert Gain control, R13 (see figure 5-3), to produce exactly 4-centimeters vertical deflection on CRT. Disconnect the voltmeter calibrator.

(2) HIGH FREQUENCY COMPENSATION AND PULSE RESPONSE. -

(a) Set the TRIGGER SOURCE control to INT, the SWEEP MODE control to PRESET, and the SWEEP TIME control to .5 MICROSECONDS/CM.

(b) Connect a Model 107 Square Wave Generator to the test connector. Set the square wave generator frequency to 0.5 megacycles and the output amplitude to obtain 3-centimeters vertical deflection on the CRT.

(c) Be sure the vertical deflection plate leads have maximum clearance between adjacent leads and any chassis parts.

(d) If necessary, adjust the Hi Freq Comp capacitor, C31 (see figure 5-3), to produce a flat-topped square wave. Ignore any high-frequency ringing at this time.

(e) Center the square wave vertically, and adjust the Pulse Response Adjust capacitor, C20 (see figure 5-3), to obtain the best leading edge on the square wave. Any ringing in step d should now decrease in amplitude. Disconnect the square wave generator.

(f) Perform the vertical passband test to table 5-7, step 11. If the passband is not equal to or greater than 30 megacycles (35 megacycles is typical) repeat steps d and e comprising the ideal square wave, but with overshoot not to exceed 0.05 centimeters.

g. MX-2930B/USM VERTICAL PLUG-IN. - Location of test points and adjustments in the MX-2930B/USM Vertical Plug-In is shown in figures 4-21, 4-22, and 5-5. For location of parts refer to figures 5-30 through 5-34.

(1) BALANCE. -

(a) Set the Vertical Presentation Switch to CHANNEL A and the SWEEP MODE switch to FREE RUN.

(b) Center the sweep vertically with the Channel A VERTICAL POSITION control.

(c) Adjust Channel A BAL, R508 (see figure 5-30), to obtain no vertical shift on the trace as the Channel A POLARITY switch is turned from +UP to -UP.

(d) Repeat the above for Channel B, setting the associated BAL control, R543 (see figure 5-30).

(2) SENSITIVITY. -

(a) Set the Vertical Presentation Control to CHANNEL A, the AC-DC switch to AC, the VERNIER adjustment to CALIBRATED, and the SENSITIVITY control to 0.02 VOLTS/CM.

(b) Set the HORIZONTAL DISPLAY control to X1, the SWEEP TIME control to 50 MICROSECONDS/CM, the SWEEP MODE control to PRESET, and the TRIGGER SOURCE switch to INT.

(c) Apply 400-cycle sine wave from a Model 738A Voltmeter Calibrator to the Channel A INPUT; set the amplitude to .05 volt peak-to-peak.

(d) Adjust the SENS CAL control for a CRT deflection height of exactly 2.5 centimeters. See figure 5-30.

(e) Check all the other ranges of the SENSITIVITY control and adjust the SENS CAL control if necessary for agreement with the following list.

SENSITIVITY VOLTS/CM	Peak-to-Peak Input Voltage	Display Height (centimeters)
0.02	0.05	2.5
0.05	0.2	3.88 to 4.12
0.10	0.3	2.91 to 3.09
0.20	0.5	2.42 to 2.58
0.50	2.0	3.88 to 4.12
1.00	3.0	2.91 to 3.09
2.00	5.0	2.42 to 2.58
5.00	20.0	3.88 to 4.12
10.0	30.0	2.91 to 3.09
20.0	50.0	2.42 to 2.58

(f) Repeat the above for Channel B, setting the associated SENS CAL control.

(3) ATTENUATOR COMPENSATION

(a) Set the Vertical Presentation Switch to CHANNEL A and the Channel A SENSITIVITY control to .02 VOLTS/CM.

(b) Connect the AN/URM-90 Q Meter to the Channel A INPUT and adjust the A Cap Adj, C1590, to make the input capacitance 30 pf.

(c) Set the Vertical Presentation Switch to CHANNEL B and the Channel B SENSITIVITY control to .02 VOLTS/CM.

(d) Connect the capacity meter to the Channel B INPUT and adjust the B Cap Adj, C1594, to make the input capacitance 30 pf.

(e) Set the Vertical Presentation Switch to CHANNEL A and connect the 600-ohm output of a Model 211A Square Wave Generator to the Channel A INPUT; set the square-wave frequency to 5 kc.

(f) Set the HORIZONTAL DISPLAY control to INTERNAL SWEEP X1, the SWEEP TIME switch to 5 MILLISECONDS/CM, the TRIGGER SOURCE switch to INT, and the SWEEP MODE control to PRESET.

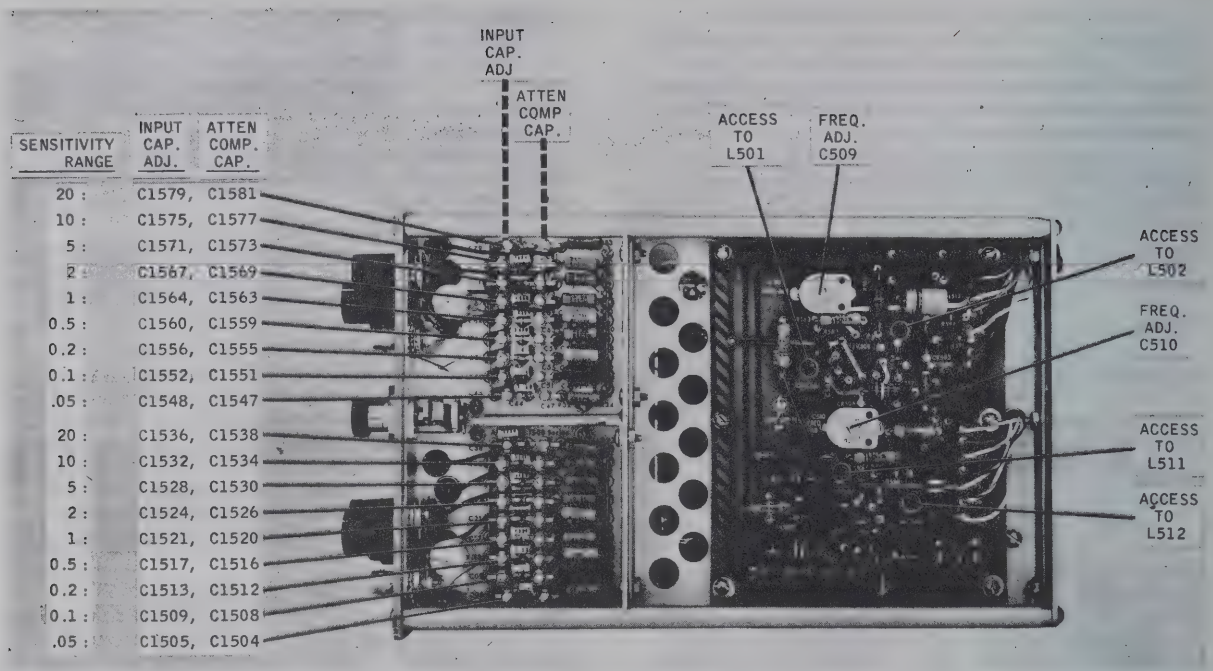

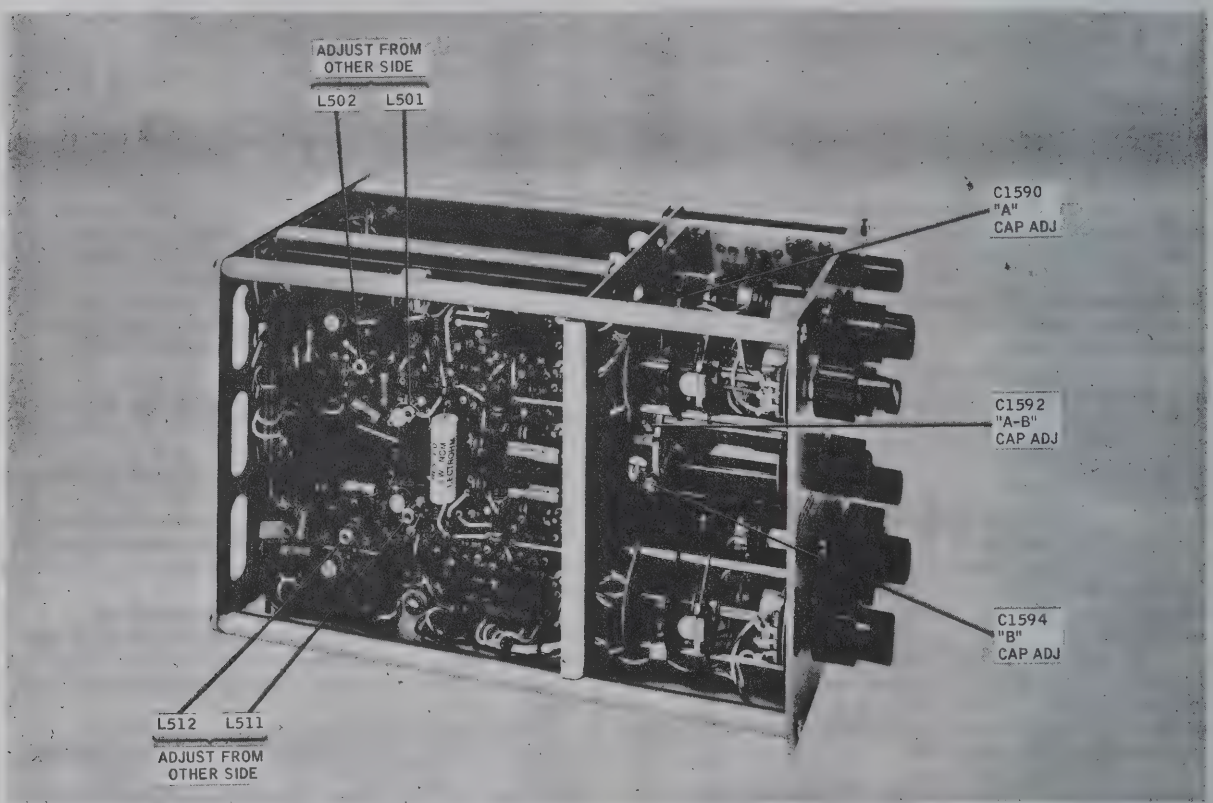

Figure 5-5. Location of Adjustments in MX-2930B/USM

(g) Set the Channel A SENSITIVITY as indicated in the list below. In each case adjust the square wave generator output amplitude for 2- or 3-centimeters of deflection and adjust the indicated capacitor for the best square wave on the CRT. See figure 5-5 for locations.

(h) Set the Vertical Presentation Switch to CHANNEL B and change the square wave generator output to the B INPUT.

(i) Repeat steps b and c above for Channel B controls.

SENSITIVITY VOLTS/CM	ADJUST	Channel A	Channel B
.05	.05 Atten Comp	C1547	C1504
.1	.1 Atten Comp	C1551	C1508
.2	.2 Atten Comp	C1555	C1512
.5	.5 Atten Comp	C1559	C1516
1	1 Atten Comp	C1563	C1520
2	2 Atten Comp	C1569	C1526
5	5 Atten Comp	C1573	C1530
10	10 Atten Comp	C1577	C1534
20	20 Atten Comp	C1581	C1538

(4) INPUT CAPACITANCE

(a) Set Vertical Presentation Switch to Channel A and connect the AN/USM-90 Q Meter to the Channel A Input.

(b) Set the Channel A SENSITIVITY switch as indicated in the table below, in paragraph (e), and adjust each indicated capacitor for 30 pf. See figure 5-5 for locations.

(c) Set Vertical Presentation Switch to Channel B and connect the AN/URM-90 Q Meter to the Channel B Input.

(d) Set the Channel B SENSITIVITY switch as indicated in the table below, and adjust each indicated capacitor for 30 pf. See figure 5-5 for locations.

(e) Set the Vertical Presentation Switch to A-B and both SENSITIVITY switches to .02 VOLTS/CM. Leave the AN/URM-90 Q Meter on Channel B. Adjust the A-B Cap Adj, C1592, to make input capacitance 30 pf.

SENSITIVITY VOLTS/CM	ADJUST	Channel A	Channel B
.05	.05 Cap Adj	C1548	C1505
.1	.1 Cap Adj	C1552	C1509
.2	.2 Cap Adj	C1556	C1513
.5	.5 Cap Adj	C1560	C1517
1	1 Cap Adj	C1564	C1521
2	2 Cap Adj	C1567	C1524
5	5 Cap Adj	C1571	C1528
10	10 Cap Adj	C1575	C1532
20	20 Cap Adj	C1579	C1536

(5) HIGH FREQUENCY RESPONSE. -

(a) Set the Vertical Presentation Switch to CHANNEL A, the Channel A SENSITIVITY to .02 VOLTS/CM, and the VERNIER to CALIBRATED.

(b) Set the HORIZONTAL DISPLAY control to INTERNAL SWEEP X1, the SWEEP TIME switch to .5 MICROSECONDS/CM, the TRIGGER SOURCE control to INT, and SWEEP MODE to PRESET.

(c) Connect a fast-rise square wave generator to the Channel A INPUT. Adjust the square-wave frequency for 2 or 3 cycles on the CRT and 3- or 4- centimeters of deflection.

(d) Adjust the High Freq coils L501 and L502 for the best square wave with minimal overshoot. Although these coils are on the left side of the Dual Trace Preamplifier, they are adjusted from right side through special holes in the circuit board (see figure 5-5).

(e) Repeat steps a through d for Channel B; adjust the High Freq coils L511 and L512 for minimum overshoot.

(6) SWITCHING MULTIVIBRATOR FREQUENCY. -

(a) Set the HORIZONTAL DISPLAY control to INTERNAL SWEEP X1, the SWEEP TIME control to .1 MICROSECONDS/CM, the VERNIER to CAL, the TRIGGER SOURCE switch to INT, the SWEEP MODE control to FREE RUN, and the INTENSITY MODULATION control to EXTERNAL.

(b) Set the Vertical Presentation Switch to ALTERNATE and adjust the VERTICAL POSITION controls for two traces about 4 centimeters apart.

(c) Set the Vertical Presentation Switch to CHOPPED and the SWEEP MODE control to PRESET.

(d) Adjust Freq Adj capacitors C509 and C510 for symmetrical square wave 10-centimeters long (neglect transients during switching).

5-5. REPLACEMENT OF COMPONENTS.

a. TUBES. - Electron tubes are best checked by replacement. Results obtained from an external tube tester can sometimes be misleading. Mark the tubes for identification as you remove them so you can return them to their original sockets if they are still good. Figure 5-6 shows the locations of the tubes and table 3-4 indicates the adjustments required following replacement of tubes, transistors, and diodes. Tube type 7308 may be replaced, in emergencies, by tube type 6922. The latter type, however, draws a different heater current and may unbalance the heater supplies. If such a substitution is made, check the ±6.3 volt supplies to assure that they are within 0.2 volts of each other. Balance can be restored by tube selection. An unused replacement 7308 tube may exhibit a stabilizing action for about 24 hours of operation after it is first placed in service. Tubes which have been "aged" at normal operating conditions for this period of time can be used for replacement if it is necessary to avoid a change in tube characteristics during this short break-in period. The V508 position in the MX-2930B/USM Dual Trace Preamplifier is sensitive in this respect. Aged and balanced tubes are recommended for replacement use in this position.

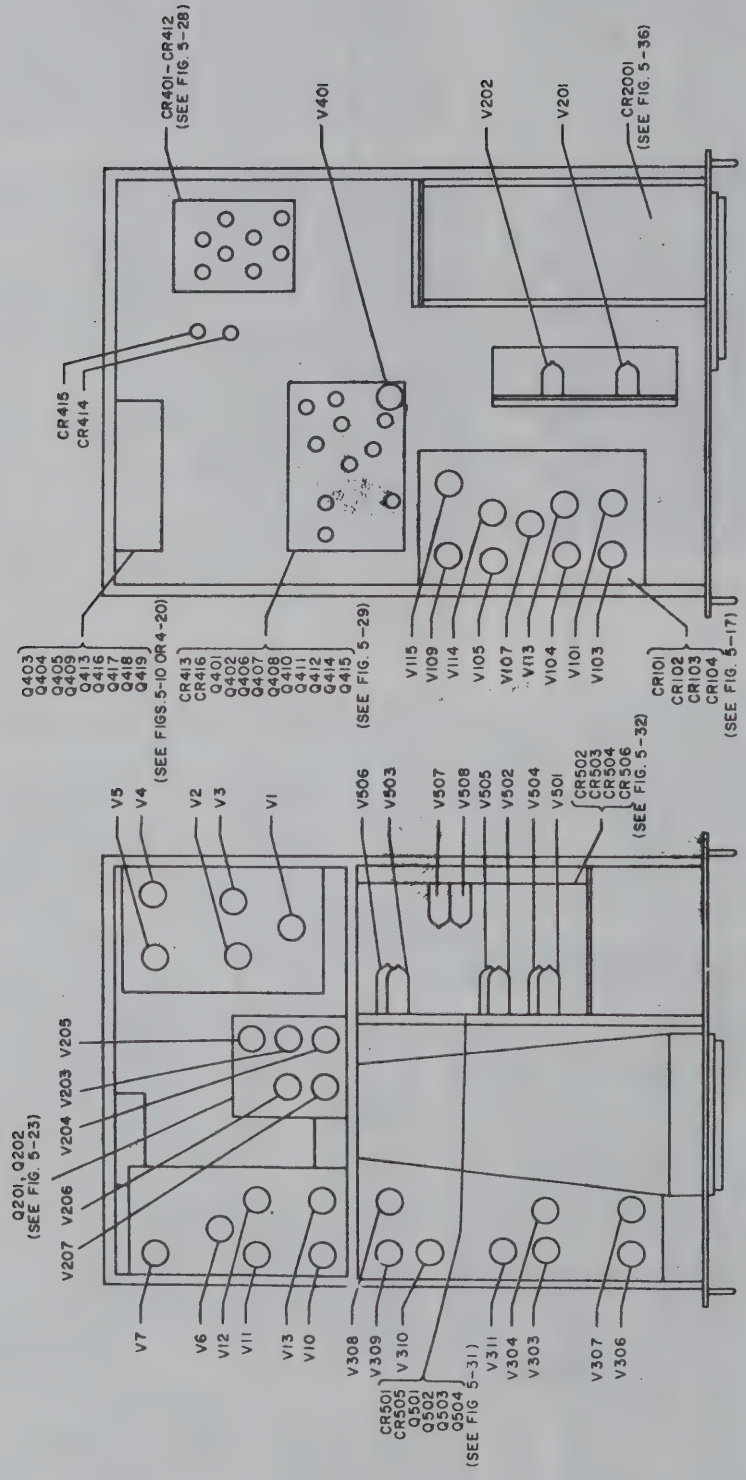

Figure 5-6. Top and Bottom Views, Location of Electron Tubes

b. TRANSISTORS AND DIODES. - For the general procedure for component replacement on etched circuit boards, refer to paragraph 5-5f. Transistors on etched circuit boards are mounted on insulated spacers that provide added support for the pigtail leads. The simplest way to remove a transistor is to cut its leads, remove and save the spacer, and unsolder the ends of the leads that are left in the board. When removing these remaining leads, use a toothpick or a small awl to clear the holes of softened solder. Avoid excessive heat, and always insulate the instrument from ground or ground the body of the soldering iron to prevent leakage voltage from damaging the component. When connecting the replacement transistor, place the insulated spacer on the new transistor and trim the leads so they will penetrate the board about 1/16 inch with the transistor positioned about 1/8 inch above the board. Solder the leads with an absolute minimum of heat necessary to completely melt the solder. If possible, place a heat sink (such as a pair of needlenosed pliers) between the transistor and the soldering iron. Because of the inherent stability of transistors, they should be the last elements suspected in case of equipment failure. When other elements have been checked in the defective circuit, locate open or shorted transistors by resistance measurements across the elements. Because of the difference in ohmmeters, no specific information can be given about exact resistances; however, generally the ratio of forward and backward emitter-collector resistance is from 10:1 to 100:1, the ratio being lower for the higher powered transistors. When a defective transistor is located, always look for another faulty element in the circuit which might have caused its failure.

c. REMOVAL OF CATHODE RAY TUBE. - To remove the CRT, refer to figure 5-7 and proceed as follows:

WARNING

Wear plastic face mask or goggles and gloves when handling the cathode ray tube. Flying glass and internal parts of the CRT caused by implosion can cause severe injury. Tube is not dangerous if handled with due care.

(1) Remove the oscilloscope from cabinet, and place chassis upright.
(2) Remove 5 leads from neck of CRT.
(3) Loosen two screws holding clamp on CRT base. Do not remove screws or clamp.
(4) Remove post-accelerator cap from CRT (see figure 5-7) by prying.
(5) Remove four mounting screws from bezel and remove bezel, filter and graticule.
(6) Slide CRT slightly forward and loosen rubber gaskets between the clamp and CRT.
(7) Remove socket from CRT base.
(8) Slide CRT forward out of instrument, keeping one hand on front face of the CRT.

To install CRT, reverse above procedure. When the CRT is installed, turn the instrument on, obtain a free-running sweep, and check sweep alignment with horizontal lines on the graticule. If necessary, loosen the clamp on the CRT base and rotate the CRT by means of the tab on the socket to align the sweep with the graticule.

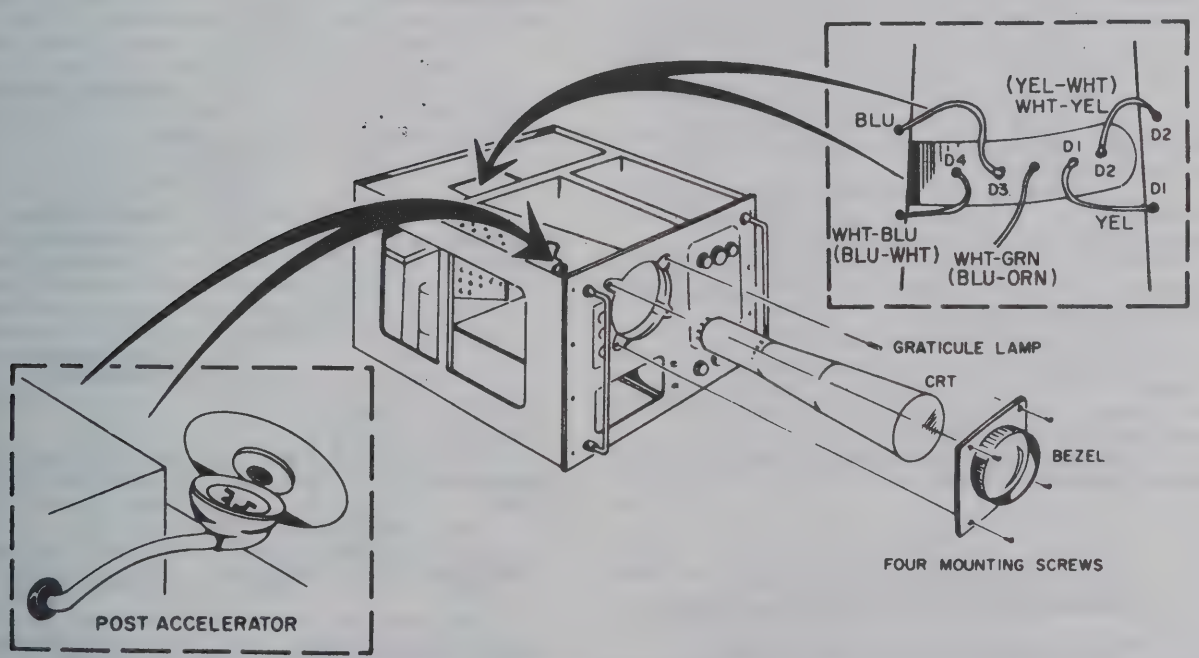

Figure 5-7. Removal of Cathode-Ray Tube

d. REMOVAL OF HIGH-VOLTAGE POWER SUPPLY TUBES. - The four high-voltage rectifier tubes, the oscillator, and regulator tubes are located under a cover accessible through the left side gusset (see figures 5-6 and 5-12). To remove the cover, remove the four machine screws securing the cover to the high-voltage power supply. Disconnect oscilloscope from power source before working on any part of the high-voltage supply. Short the tube plate caps to ground before removing them from the tubes. To remove the four rectifier tubes remove the insulator plate that secures the tubes.

e. ACCESS TO SWEEP GENERATOR TUBES. - The sweep generator tubes may be reached by removing the MX-2930B/USM Vertical Plug-In and the shield plate in the floor on the empty plug-in well. Two screws hold the shield in place. Return the shield before replacing the plug-in unit. Refer to figure 5-6.

f. COMPONENT REPLACEMENT ON ETCHED CIRCUIT BOARDS. - If a circuit board must be removed, first release tube clamps and remove all electron tubes. Use a low-power soldering iron (50 watts maximum) and apply heat sparingly to the lead of the part to be replaced. Slip the lead from the board as soon as the solder softens. For transistors and diodes, see the special procedure in paragraph 5-5b. Use a small awl or toothpick to clean the softened solder from the lead hole in the board. Bend the tinned leads of the replacement part and carefully insert through the cleaned holes. Hold the part against the board and, when possible, solder the leads from the other side. Avoid overheating and use ONLY a high quality rosin-core solder. NEVER USE PASTE FLUX. After soldering trim off excess leads and flux.

A break in the copper should be repaired by soldering a short length of tinned copper wire across the break. Copper that lifts off the board should be cemented in place with a quick drying acetate base cement having good electrical insulating properties. When replacing tube sockets cut all contacts to remove socket, then unsolder the remains.

When reinstalling the board, carefully align tube retainers with their respective chassis holes. Do not force the board into place by turning down on the mounting screws.

g. ACCESS TO FAN AND POWER SUPPLY TRANSISTORS. - The fan motor and certain power supply transistors are mounted on the fan shroud.

(1) For removal of the fan assembly and location of the power transistors, refer to paragraph 5-2b and figures 4-20 and 5-10.

(2) To remove the fan blades, use the 1/8 inch Allen wrench mounted on the rear of the chassis. There is an access port for this wrench on the bottom of the fan shroud. Turn the fan blades until the socket head screw is visible.

h. REPLACEMENT OF HORIZONTAL DISPLAY SWITCH ASSEMBLY A200. -

Note

Read and understand each step before starting this procedure. See figure 5-21.

(1) Remove the cabinet and both plug-in units.

(2) Set the HORIZONTAL DISPLAY switch S202 to X100 and the EXTERNAL VERNIER switch to CAL.

(3) Remove both knobs with the Allen wrench mounted on rear chassis of instrument.

(4) Remove and save the front-panel mounting nut from the switch.

(5) Rear support bracket of switch S202 is part of the assembly. Remove and save the two screws holding the bracket to the chassis.

(6) Remove and save the shaft locknut and mounting hardware for the Vern Bal control R211 (figure 5-4).

(7) Remove and save shaft locknut and mounting hardware for the X100 Gain control R211 (figure 5-4).

(8) At the insulated terminal of the tie lug strip on the mounting bracket of switch S202, disconnect the white lead from the center terminal of R211 (see figure 5-21).

(9) At the grounded terminal of the tie lug strip, disconnect black wire from the cable.

(10) Disconnect the white, white/black, white/black/green, white/yellow, and the white/orange/green wires from etched circuit board A201. This wiring is indicated in figure 5-8, which also shows the corresponding colors for Model AN/USM-140C.

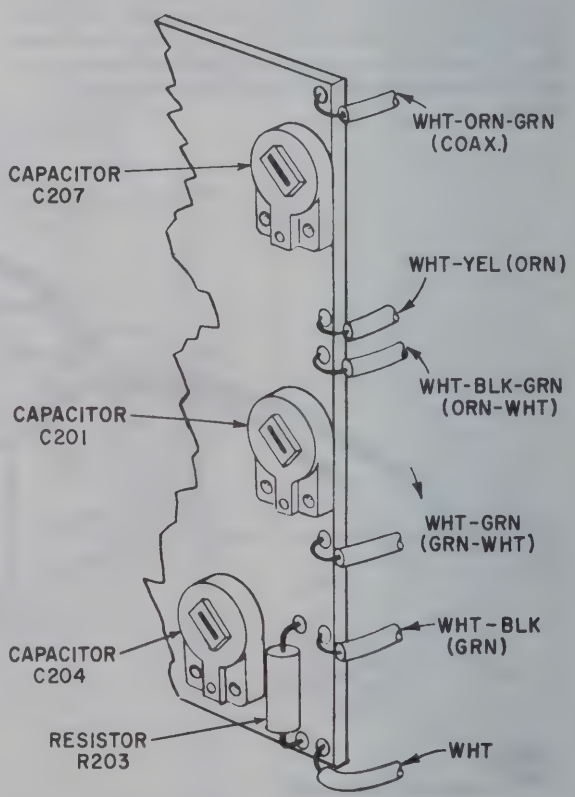

Figure 5-8. Wiring Between Switch S202 and Etched Circuit Board A201

(11) At the top of the AC-DC switch S201, disconnect the green wire from wafer A of S202.

(12) Remove the bottom shield plate of the plug-in unit well.

(13) Disconnect the white/brown/blue, white/brown/red, white/brown/orange, and white/brown/green wires from the top of wafer B of switch S202. These are the wires that go to the SWEEP TIME switch. They are shown on Figures 5-21 and 5-42. The corresponding colors for Model AN/USM-140C are shown in Figures 5-21A and 5-42A.

(14) Disconnect two white/brown (or gray) wires at terminal on wafer C of switch S202 (47 ohm, 2 watt resistor also connected to this terminal).

(15) Remove and save two screws holding assembly of circuit boards A201 and A203 to chassis (figure 5-10).

(16) Cut off following wires as close as possible to terminals on S202.

(a) Violet and white/yellow/violet (or violet/red) wire on wafer B.

(b) Green wire on bottom of wafer A.

(c) Two black wires on wafer A.

(d) White/green/violet (or coax.) wire on wafer C.

(e) White/yellow/blue (or orange) wire on wafer C.

(f) Twisted pair of yellow (or green) and white/yellow (or green/white) wires on wafer E.

(g) White/yellow/green (or orange/white) wire on wafer E.

(h) White/violet (or coax.) wire on rear of EXTERNAL VERNIER CAL switch S203.

(i) White/black/green (or white/green) wire on wafer A.

(17) Remove and discard defective switch assembly.

(18) Dress all leads on replacement switch toward bottom of switch except green lead from top of wafer A; white/brown/blue, white/brown/red, white/brown/orange, and white/brown/green from top of wafer B; white/brown wire from wafer C, white/yellow/green and twisted pair of yellow and white/yellow wires from wafer E. These wires are shown on figures 5-21 and 5-42. The corresponding colors for Model AN/USM-140C are shown in figures 5-21A and 5-42A.

(19) Insert replacement switch in instrument with shaft through front panel. Put on front-panel mounting nut and tighten finger tight. Be sure the switch positioning lugs on the front of switch engage holes in the rear of front panel. Press leads dressed toward bottom of switch through the hole toward circuit board A201.

(20) Connect and solder the green wire from top of wafer A to the top of AC-DC switch S201.

(21) Connect and solder one black lead from wafer A of S202 to ground terminal on sweep generator circuit board A101. Disconnect the black lead left from old switch.

(22) Connect and solder the remaining black lead from wafer A of S202 to terminal on top of circuit board A203 in place of black lead from old switch.

(23) Connect and solder the violet wire from wafer B of S202 to the center terminal of R1002 (.1 Sec Timing) in place of the violet wire from the old switch.

(24) Connect and solder the white/yellow violet (or violet/red) wire from wafer B of S202 to one end of resistor R143 on sweep generator circuit board A101 in place of corresponding wire from old switch. Dress new wire along same route as old wire.

(25) Dress the white/brown/blue, white/brown/red, white/brown/orange, and white/brown/green wires from wafer B of S202 over to SWEEP TIME switch S1001 and connect and solder them to separate terminals on wafer A of S1001 as shown in figure 5-18, (figure 5-18A for Model AN/USM-140C). Remove each of the corresponding wires remaining from the replaced switch.

(26) White/yellow/blue (or orange) wire from wafer D of S202 should be connected to R223. However, it is easier to connect the old wire to terminal of wafer D of S202 in place of new wire supplied with replacement switch.

(27) White/yellow/green wire from wafer E of S202 should be connected to R223. However, it is easier to connect old wire to terminal of wafer E of S202 in place of wire supplied with replacement switch.

(28) White/violet (coax.) wire from EXTERNAL VERNIER CAL switch S203 should be connected to circuit board A203. However, it is easier to connect old wire to S203 in place of wire supplied with replacement switch.

(29) Route new twisted pair of yellow (or green) and white/yellow (or green/white) wires from wafer E of S202 along same path as wires from original switch and connect new wires in place of old ones. Connect yellow (or green) wire to junction of R244 and C211 on horizontal amplifier circuit board A202; connect white/yellow (or green/white) wire to junction of R259 and C213 on same board.

(30) Connect and solder white/brown (or gray) wire from the Vern Bal control R211 and white/brown wire from the SCALE LIGHT control R1025 to terminal on wafer C of S202 to which 47-ohm, 2-watt resistor is connected. Remove and discard corresponding wires supplied on switch.

(31) White/green/violet (or coax.) wire from wafer C of S202 should be connected to circuit board A203. However, it is easier to connect old white/green wire in place of wire supplied with replacement switch.

(32) Remove mounting nut from switch S202 and slide back to gain access to bottom terminal on wafer A to which green wire is attached.

(33) Replace the green wire from bottom of wafer A of switch S202 with green wire from circuit board A203.

(34) Replace white/black/green (or white/green) wire on bottom of wafer A to J201.

(35) Slide switch forward through panel and engage switch position lugs in holes on rear side of front panel. Replace front-panel mounting nut and tighten finger tight.

(36) All wires from S202 except the following five wires (and one white wire off S203) should be connected by previous steps:

(a) White/yellow (or orange) wire from EXTERNAL VERNIER CAL switch S203.

(b) White/orange/green (or coax.) and white/black/green (or orange/white) wires from wafer C.

(c) White and white/black (or white/green) wires from wafer A.

(37) Dress the five wires identified above so they are in sequence for connecting to circuit board A201 (see figure 5-8).

(38) Remount assembly of circuit boards A201 and A203 on chassis. Use two 6-32 x 3/4 inch mounting screws and #6 internal-tooth lockwasher under each screw head.

(39) Refer to figure 5-8 and connect five wires identified in step 37 to circuit board A201.

(40) Replace but do not tighten two 6-32 x 3/8 inch mounting screws for switch S202 rear mounting bracket. Place 6 x 3/8 inch flat washer under each screw head.

(41) Tighten front-panel mounting nut.

(42) Be sure no wires are pinched under switch S202 rear mounting bracket and tighten mounting bracket screws.

(43) Remount the X100 Gain control R223. Place internal-tooth lockwasher under mounting nut. Be sure locating lug is in corresponding chassis hole before tightening mounting nut. Be sure no wires are pinched under control.

(44) Remount Vern Bal control R211. Follow same procedure given for R223 above.

(45) Replace shaft locknuts on R223 and R211.

(46) Connect and solder the white wire from the center terminal of the Vern Bal control R211 to insulated terminal of tie lug strip on the rear mounting bracket of S202.

(47) Connect and solder the black wire from cable to the grounded terminal of tie lug strip on the rear mounting bracket of S202.

(48) Replace the black knob on the HORIZONTAL DISPLAY switch S202. Be sure switch is rotated fully clockwise. Tighten both setscrews with knob pointer in X100 position.

(49) Replace the red knob on the EXTERNAL VERNIER control shaft. Rotate shaft fully clockwise to CAL position and tighten knob so pointer points to CAL.

(50) Replace bottom plate of vertical plug-in unit amplifier well. Use two 6-32 x 3/8 inch machine screws with lockwashers.

(51) Switch replacement is complete. Before putting instrument back into service, check horizontal amplifier adjustment (paragraph 5-4d).

i. REPLACEMENT OF SWEEP TIME SWITCH ASSEMBLY A1000.

Note

Read and understand each step before starting this procedure. (See figures 5-13 and 5-18).

(1) Remove the cabinet and both plug-in units.

(2) Remove the knobs from the SWEEP TIME switch (S1001) and VERNIER control. Use the #8 Allen wrench mounted on rear chassis of instrument.

(3) Remove and save the front-panel mounting nut.

(4) Remove the bottom shield plate of the vertical plug-in unit well. This plate is held in place by two screws.

(5) Examine the coupling at the inner end of the center shaft of switch S1001. A small hairpin-shaped coupler connects the shaft to R1009.

(6) Loosen but do not remove the mounting nut of R1009 and slide the control back far enough to free the coupler.

(7) Remove the coupler from the end of the shaft and save it.

(8) Remove and save washer(s), spacers, "O" ring, and spacer on the end of the shaft.

(9) Pull the shaft forward out of the instrument.

(10) Mark all tubes so they can be returned to the same sockets and remove V101, V113, V107, V114, and V115.

(11) Remove and save both screws holding mounting rear bracket S1001 to chassis.

(12) Trace the coax center conductor from wafer C of S1001 to the junction of R151 and CR104 on the sweep generator circuit board A101; disconnect this coax center conductor at the circuit board A101.

(13) Trace the yellow wire from wafer D on S1001 through the chassis hole to the terminal on circuit board A101. Disconnect this yellow wire from S101 at circuit board A101.

(14) Disconnect white/black/yellow (or gray/orange) wire at terminal on wafer A of S1001 and remove ties holding wire to S1001 frame.

(15) Disconnect white/brown/green, white/brown/orange, white/brown/red, and white/brown/blue wires at their respective terminals on wafer A of S1001. (See figure 5-18A for colors in AN/USM-140C.

(16) At the socket terminal for SWEEP UNCAL lamp DS1001, disconnect the brown (or white) wire from wafer A of S1001.

(17) Disconnect green wire from wafer D of S1001 at the rear terminal of 1.0 mfd 200 volt capacitor C1006.

(18) Disconnect the black wire from wafer D of S1001 at the front terminal of C1006.

(19) Disconnect the yellow wire on wafer D that goes to J105. (This wire not used in AN/USM-140C).

(20) Orange and white/orange/yellow (or yellow/orange) wires connect two terminals of wafer B of S1001 to two terminals on the CAL switch S1002 on the rear of the VERNIER control R1009. These wires will be used for connections to the replacement switch. Cut both wires at terminals on wafer B of S1001.

(21) Cut the six-wire cable connecting to wafer B of S1001 and remove the defective switch. This cable consists of a white/orange, white/black, white/red, white/green, black, and a violet wire.

(22) Pull the cable cut in step 21 into compartment for auxiliary plug-in.

(23) Remove the center shaft from replacement switch and place switch in instrument. Pass the yellow wire (disconnected in step 13) from wafer D of S1001 through chassis hole with other wires when inserting switch.

(24) Route the six-wire cable from wafer B of the replacement switch along same path as the cable from original switch.

(25) To gain access to the terminals of controls R178, R1024, R1004, R1003, and R1002 (fig-

ure 5-4) remove the two mounting screws holding this assembly in place. Save screws and lockwashers.

(26) Observe color code and connect wires from replacement switch cable in place of wires from old switch:

(a) Black wire to ground terminal of tie lug strip on rear mounting bracket of HORIZONTAL DISPLAY switch S202.

(b) Violet wire to Sweep Length control R178.

(c) White/orange to .1 msec Timing control R1024.

(d) White/black to 1 msec Timing control R1004.

(e) White/red to 10 msec Timing control R1003.

(f) White/green to .1 sec Timing control R1002.

(27) Remount assembly of circuit boards A201 and A203. Use 6-32 x 3/4 inch screws and #6 internal-tooth lockwashers (see figure 5-10).

(28) Route the orange and white/orange/yellow (or yellow/orange) wires (disconnected in step 20) through S1001 switch wafer D to wafer B in place of wires with corresponding colors supplied on replacement switch. Connect the routed wires to wafer B terminals in place of supplied wires.

(29) Connect black wire from wafer D of S1001 to front terminal of 1.0 mfd 200-volt capacitor C1006. (See figure 5-40.)

(30) Connect the green wire from wafer D of S1001 to rear terminal of C1006.

(31) Connect the yellow wire from terminal 2 of wafer D to J105 (this wire omitted in Model AN/USM-140C.) An easier method is to clip off the existing yellow wire and reconnect the old wire disconnected to step 19.

(32) Connect the brown (or white) wire from wafer A of S1001 to vacant socket terminal of SWEEP UNCAL lamp DS1001.

(33) Connect white/brown/green, white/brown/orange, white/brown/red, and white/brown/blue wires from HORIZONTAL DISPLAY switch S202 to their respective terminals on wafer A of S1001. See figure 5-40 for proper locations. See figure 5-40A for colors in AN/USM-140C.

(34) Connect white/black/yellow (or gray/orange) wire (disconnected in step 14) from J105 to vacant terminal of rear side of wafer A of S1001. A 3.3-megohm resistor is connected to adjacent terminal. Use the same procedure as in step 31.

(35) Tie white/black/yellow (or gray/orange) wire to the frame of switch S1001 at wafers A and D.

(36) Connect the yellow wire from terminal 22 of wafer D of S1001 to terminal on circuit board A101.

(37) Dress the coax inner conductor from wafer C of S1001 through the chassis hole and hole in circuit board A101. Connect this wire to the junction of R151 and CR104 on circuit board A101.

(38) Dress the coax inner conductor along chassis and between tubes V114 and V115. Leave no slack at board A101.

(39) Replace but do not tighten the two 6-32 x 3/8 screws inch and #6 x 3/8 inch O.D. flat washers for rear mounting bracket of S1001. Be sure switch positioning lugs on front of switch engage holes in rear of front panel.

(40) Replace and tighten the front-panel mounting nut; then tighten the two rear mounting screws. Be sure no wires are pinched under mounting bracket.

(41) Insert the new shaft through center of S1001 and replace spacer, "O" ring, and spacer on inner end of center shaft.

(42) Replace washer(s) removed from shaft in step 8 and replace the hairpin coupler on end of shaft.

(43) Engage the coupler in the slot on the end of the shaft of the VERNIER control R1009.

(44) Tighten the mounting nut for R1009.

(45) The center shaft of S1001 should have approximately 1/32 inch end play and coupler must fully engage slot in shaft of R1009. Washer(s) placed on center shaft in step 42 determine end play and can be varied in number to adjust end play.

(46) Replace the tubes V115, V114, V107, V113, and V101.

(47) Replace the bottom shield plate of vertical plug-in unit well. Use two 6-32 x 3/8 inch machine screws with lockwashers.

(48) Replace the black knob on the SWEEP TIME switch. Be sure the switch is rotated fully clockwise and tighten both setscrews with knob pointer in .1 MICROSECONDS/CM position.

(49) Replace the red knob on the VERNIER control shaft. Rotate the shaft fully clockwise to CAL and tighten both setscrews so the pointer points to CAL.

(50) Switch replacement is complete. Before putting the instrument back into service, check sweep calibration, paragraph 5-4e.

5-6. LOCATION OF PARTS.

Figures 5-9 through 5-36 show locations of parts. All replaceable components and subassemblies are identified on the illustrations by reference designation and cross-referenced in the tables adjacent to each large etched circuit assembly and schematic drawing. These tables identify the location of each part on the adjacent illustration by use of "map-type" coordinates.

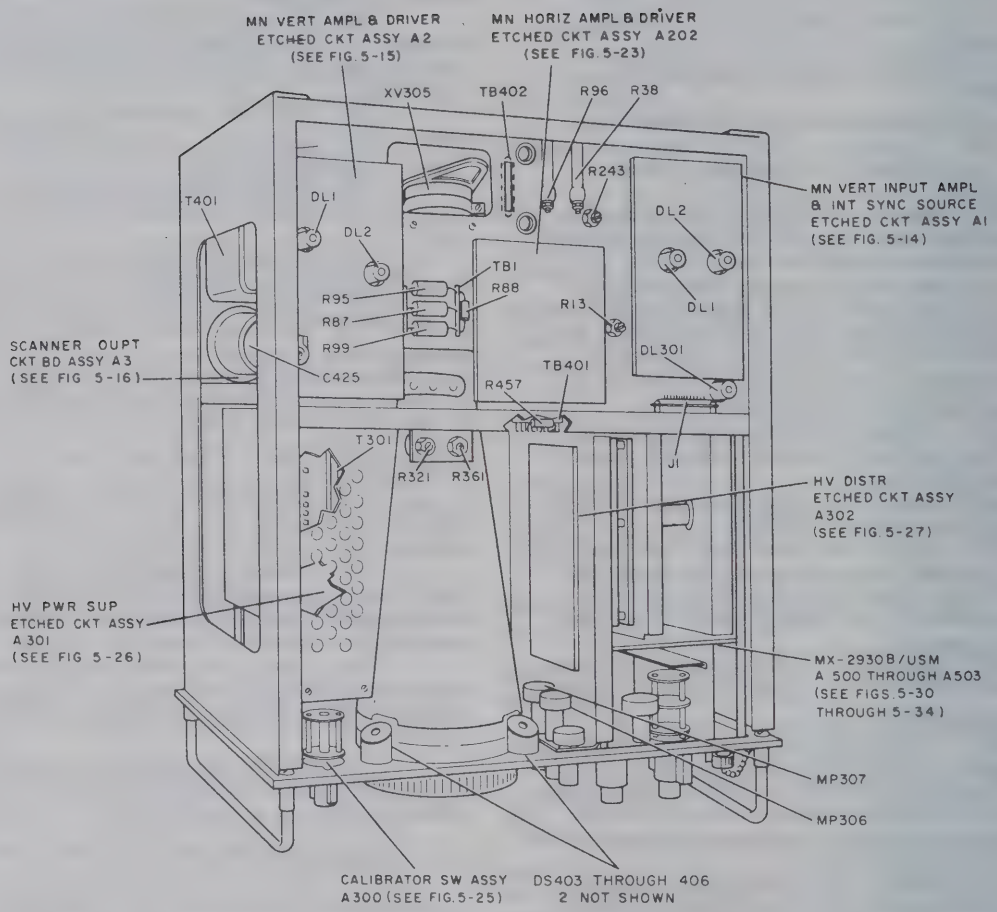

Figure 5-9. Top View, Location of Parts

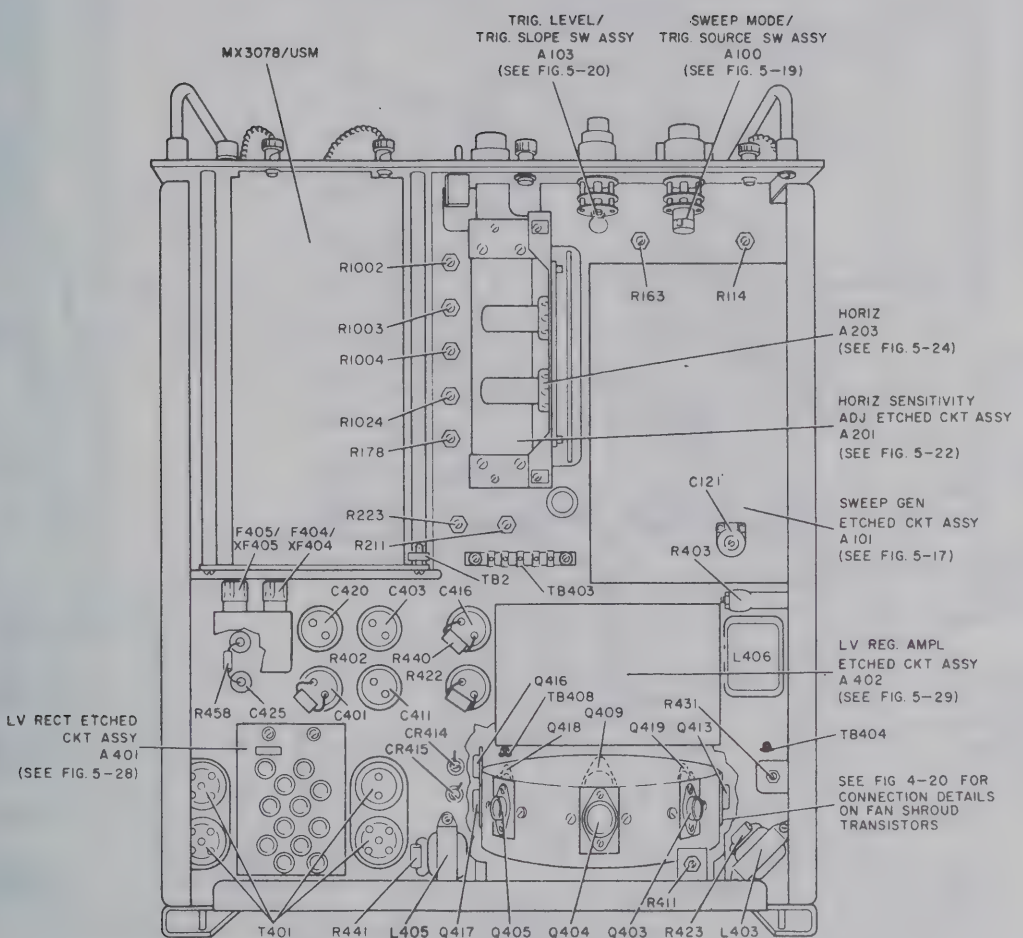

Figure 5-10. Bottom View, Location of Parts

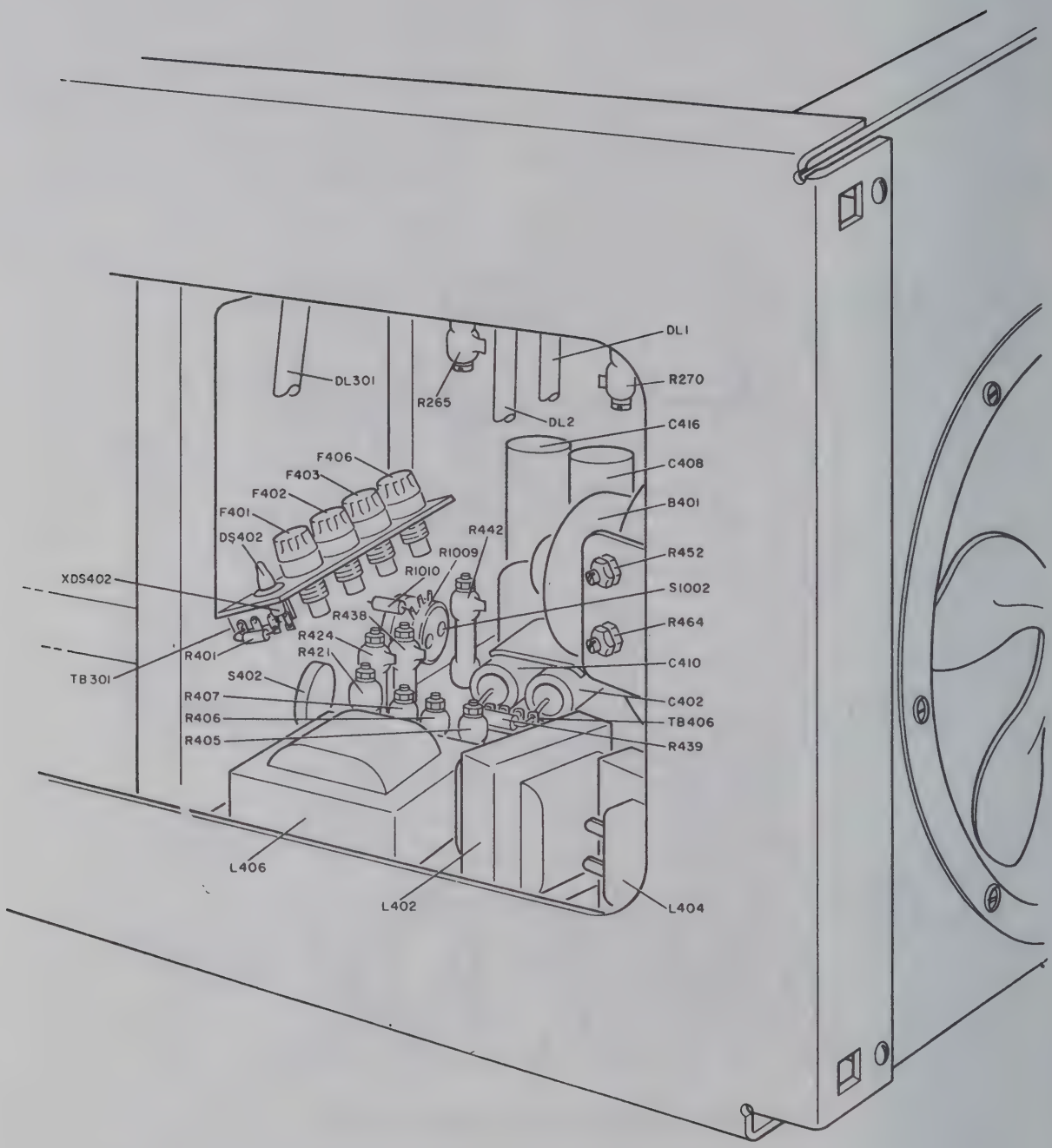

Figure 5-11. Right-Side View, Location of Parts

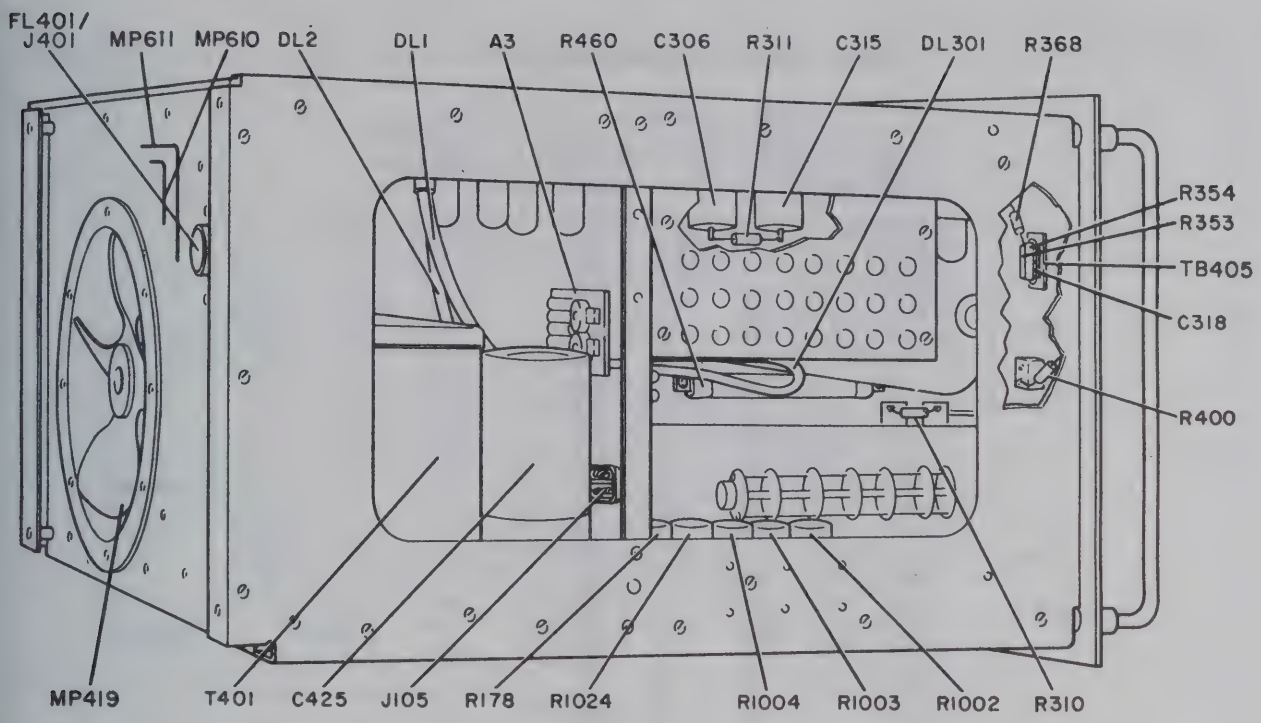

Figure 5-12. Left-Side View, Location of Parts

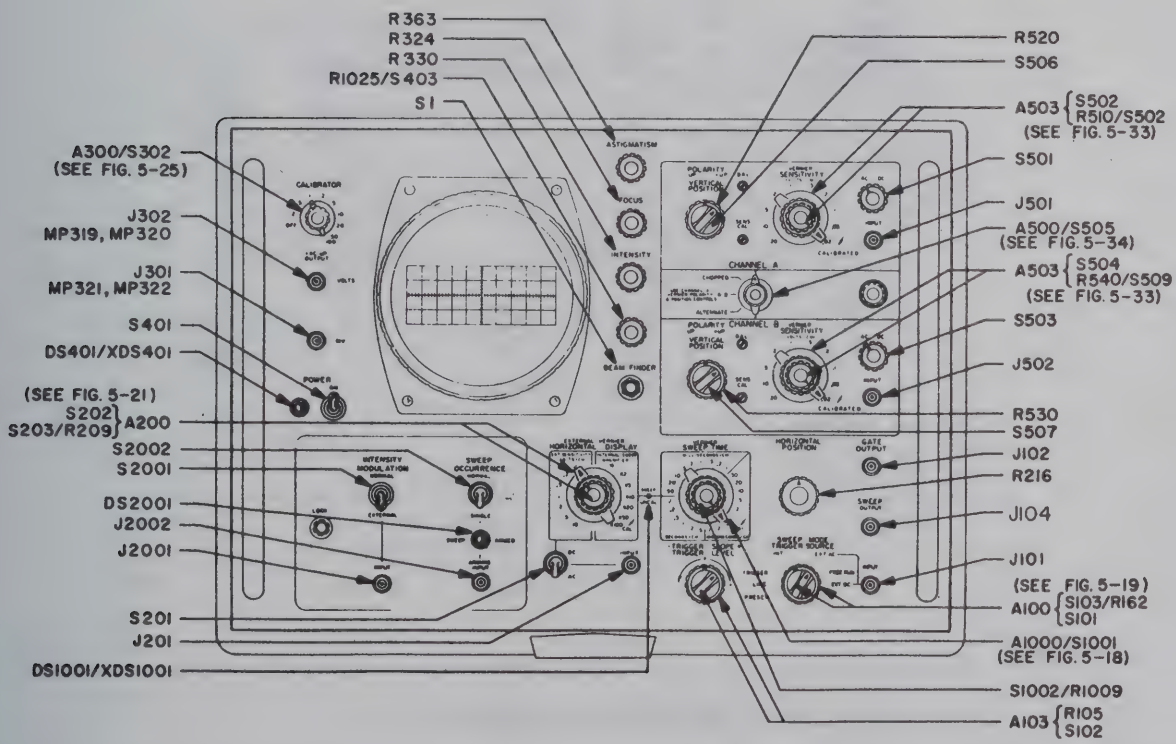

Figure 5-13. Front-View, Location of Parts

PARTS LOCATION INDEX FOR FIGURE 5-14

REF. DESIG.	DRAWING LOCATION
C1	B2
C2	B3
C7	D5
C8	C5
C9	D6
C10	C6
C11	B5
C12	B6
C13	A6
C14	B5
C15	B4
L3	B4
L4	B4
L5	C4
L6	C4
L9	C6
L10	A6
R1	B2
R2	A2
R3	C2
R4	C2
R5	A3
R6	B2
R7	D3
R8	A3
R9	D2
R11	B4
R12	A4

REF. DESIG.	DRAWING LOCATION
R14	C3
R16	C4
R18	C5
R19	C4
R20	B5
R21	C6
R22	D6
R23	D6
R24	C5
R25	B6
R26	B5
R27	B5
R28	B5
R29	A6
R30	A6
R31	A5
R32	B6
R36	B3
R37	D4
R39	A4
R40	D5
R41	A5
XV1	B2
XV2	B3
XV3	C3
XV4	C5
XV5	A5

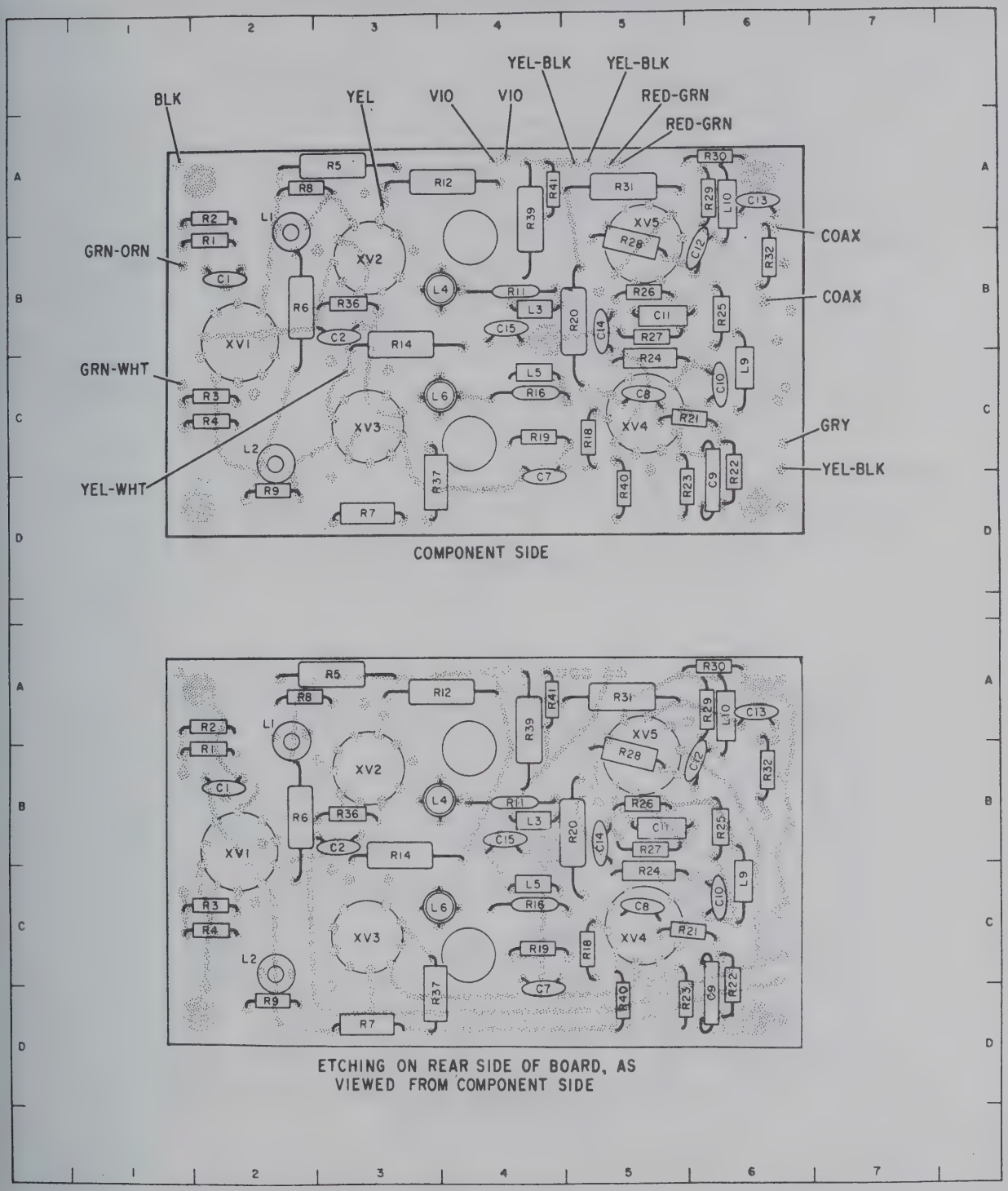

(SEE INDEX ON PAGE 5-28)

Figure 5-14A. Main Vertical Amplifier and Internal Sync Source Etched Circuit Assembly A1, Location of Parts AN/USM-140C

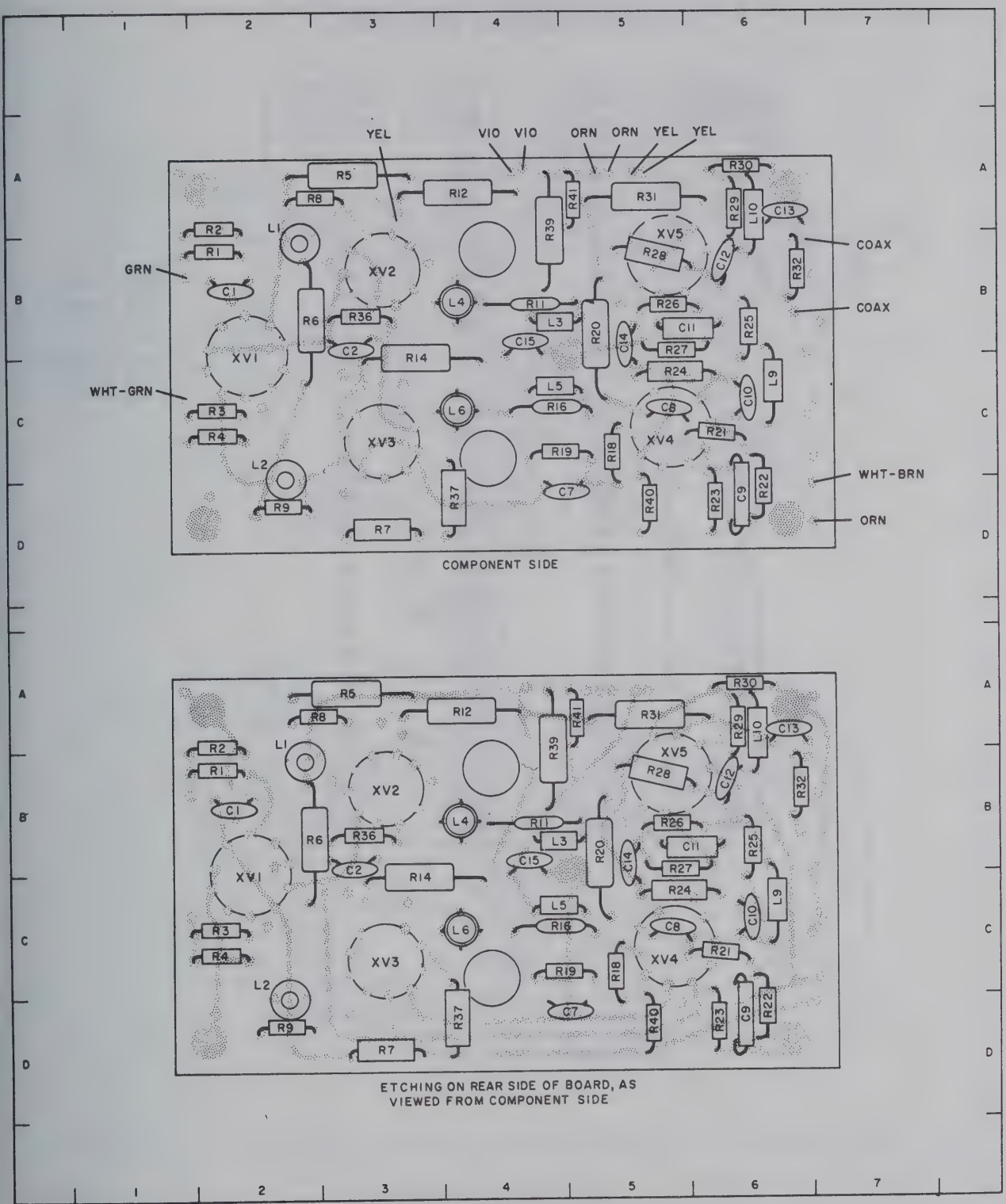

Figure 5-14. Main Vertical Input Amplifier and Internal Sync Source Etched Circuit Assembly, Location of Parts

PARTS LOCATION INDEX FOR FIGURE 5-15

REF. DESIG.	DRAWING LOCATION
C20	B4
C21	A2
C22	C4
C23	C4
C24	C4
C25	B4
C26	C1
C27	B4
C30	D6
C31	D5
C32	C5
C33	A5
C34	B7
C35	B4
L13	D2
L14	D3
L15	D4
L16	A2
L17	A2
L18	B4
L19	C4
L20	B4
L21	A5
L22	A6
R45	D2
R46	D3
R47	D4
R48	C4
R49	B3
R50	C3
R51	C3
R52	C3
R53	C5
R54	B2
R55	B2

REF. DESIG.	DRAWING LOCATION
R56	D2
R62	B2
R63	B3
R64	C4
R65	A3
R66	B3
R67	B3
R68	B3
R69	B4
R70	B2
R71	B2
R77	C5
R78	C5
R79	C5
R80	B5
R83	C6
R84	C6
R85	B6
R86	B6
R89	B5
R90	A5
R91	B5
R92	B6
R93	A6
R94	B6
R97	B7
R98	A7
V8	C4
V9	C4
XV6	C4
XV7	C2
XV10	C6
XV11	C5
XV12	B5
XV13	B6

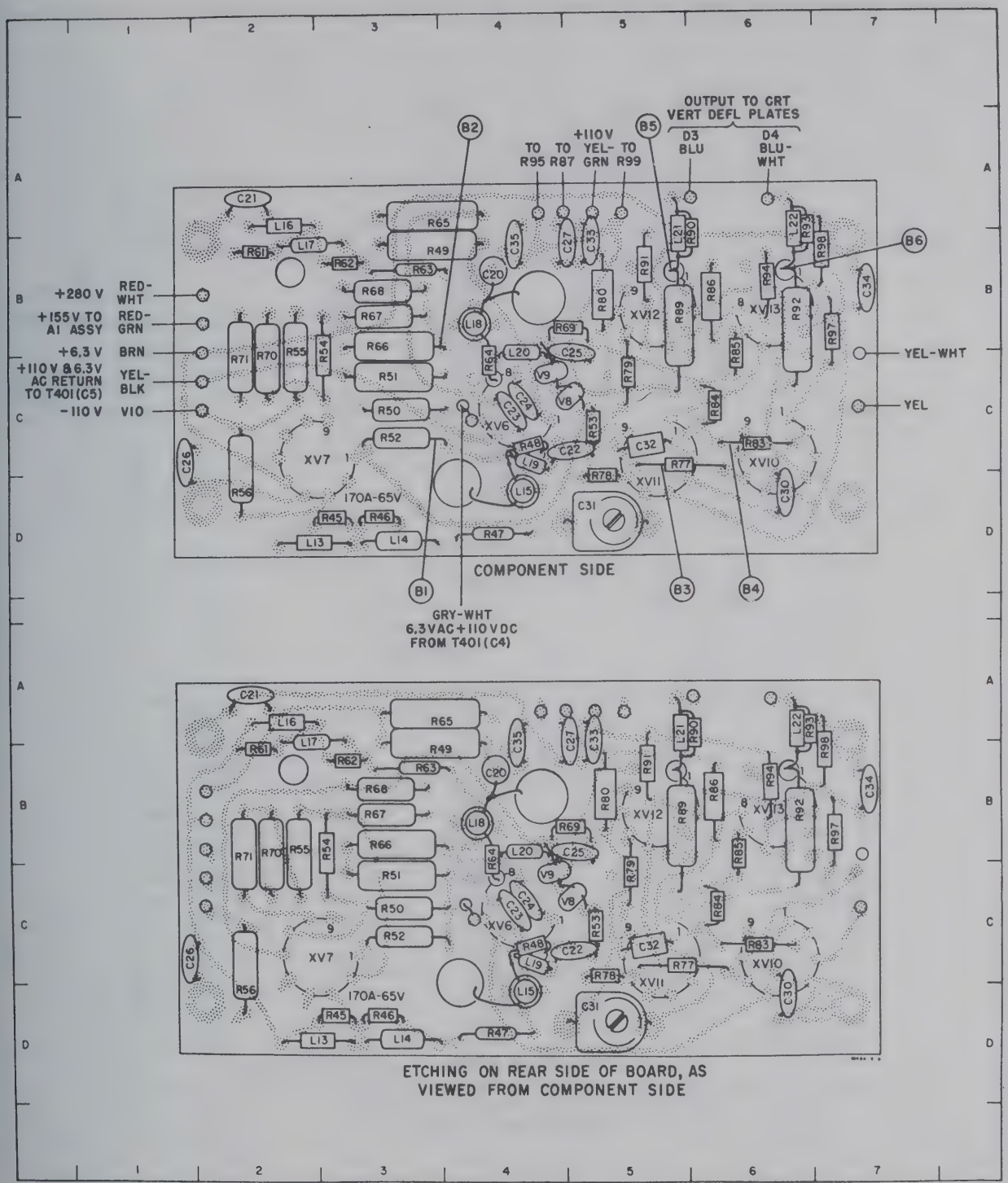

(SEE INDEX ON PAGE 5-30)

Figure 5-15A. Main Vertical Input Amplifier and Driver Etched Circuit Assembly A2, Location of Parts AN/USM-140C

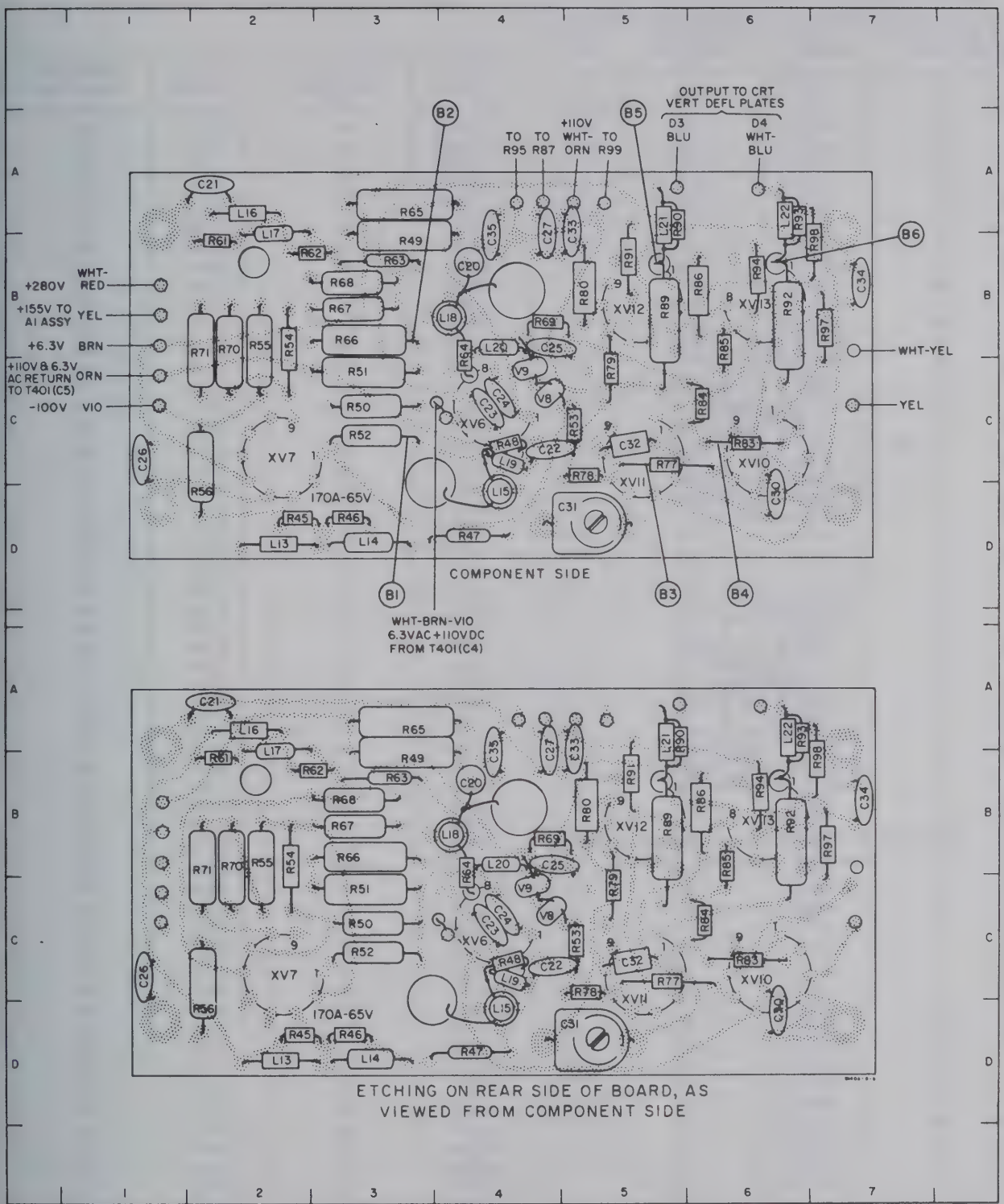

Figure 5-15. Main Vertical Amplifier and Driver Etched Circuit Assembly, Location of Parts

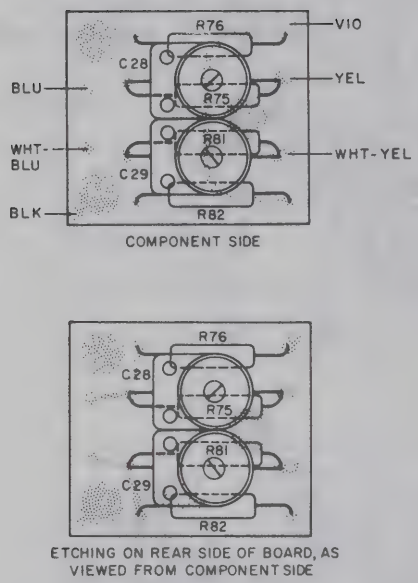

Figure 5-16. Scanner Output Etched Circuit Assembly, Location of Parts

PARTS LOCATION INDEX FOR FIGURE 5-17

REF. DESIG.	DRAWING LOCATION
CR101	B3
CR102	B3
CR103	A4
CR104	A5
C102	C6
C105	C2
C106	B2
C107	B2
C108	B2
C109	A3
C110	A2
C114	A4
C116	C4
C117	B3
C118	C3
C119	B5
C121	B6
C122	A6
C123	C6
C124	B6
C132	D3
C133	C3
C134	C5
C135	B5
C136	C3
C137	C4
C138	C3
C139	C3
C140	A6
C141	A6
C142	B4
C143	D5
L101	B2
L102	A2
L103	B3
R107	C2
R108	C2
R109	B2
R110	C2
R111	D2
R112	D2
R113	D2
R115	A2
R116	A2
R117	B2
R118	B2
R119	B2
R120	B2
R121	B3
R122	B3
R123	A3
R124	B3
R125	B3
R130	A3
R131	B4
R132	B4
R133	D5
R135	B4
R136	C4

REF. DESIG.	DRAWING LOCATION
R137	C4
R138	C4
R139	B3
R140	A3
R141	A3
R142	B3
R143	C2
R144	A4
R145	B4
R146	A5
R147	A5
R148	B5
R149	B5
R150	B5
R151	B5
R152	B6
R153	A5
R154	C6
R155	C6
R156	C5
R157	C6
R158	B5
R159	B6
R160	B6
R165	D4
R167	C3
R168	D3
R169	C3
R170	C3
R171	D4
R172	C3
R173	C4
R174	D3
R175	C5
R176	D5
R177	D5
R179	D5
R180	B5
R181	C5
R182	B5
R186	C5
R187	C3
R188	A5
R189	B6
R190	B4
V102	C2
V110	B2
V111	A4
V116	C6
XV101	C2
XV103	A2
XV104	A3
XV105	A5
XV107	C4
XV109	B6
XV113	C3
XV114	C5
XV115	C6

PARTS LOCATION INDEX FOR FIGURE 5-17A

REF. DESIG.	DRAWING LOCATION
CR101	B3
CR102	B3
CR103	A4
CR104	A5
C102	C6
C105	C2
C106	B2
C107	B2
C108	B2
C109	A3
C110	A2
C114	A4
C116	C4
C117	B3
C118	C3
C119	B5
C121	B6
C122	A6
C123	C6
C124	B6
C132	D3
C133	C3
C134	C5
C135	B5
C136	C3
C137	C4
C138	C3
C139	C3
C140	A6
C141	A6
C142	B4
C143	D5
L101	B2
L102	A2
L103	B3
R107	C2
R108	C2
R109	B2
R110	C2
R111	D2
R112	D2
R113	D2
R115	A2
R116	A2
R117	B2
R118	B2
R119	B2
R120	B2
R121	B3
R122	B3
R123	A3
R124	B3
R125	B3
R130	A3
R131	B4
R132	B4
R133	D5
R135	B4

REF. DESIG.	DRAWING LOCATION
R136	C4
R137	C4
R138	C4
R139	B3
R140	A3
R141	A3
R142	B3
R143	C2
R144	A4
R145	B4
R146	A5
R147	A5
R148	B5
R149	B5
R150	B5
R151	B5
R152	B6
R153	A5
R154	C6
R155	C6
R156	C5
R157	C6
R158	B5
R165	D4
R167	C3
R168	D3
R169	C3
R170	C3
R171	D4
R172	C3
R173	C4
R174	D3
R175	C5
R176	D5
R177	D5
R179	D5
R180	B5
R181	C5
R182	B5
R186	C5
R187	C3
R188	A5
R189	B6
R190	B4
V102	C2
V110	B2
V111	A4
V116	C6
XV101	C2
XV103	A2
XV104	A3
XV105	A5
XV107	C4
XV109	B6
XV113	C3
XV114	C5
XV115	C6

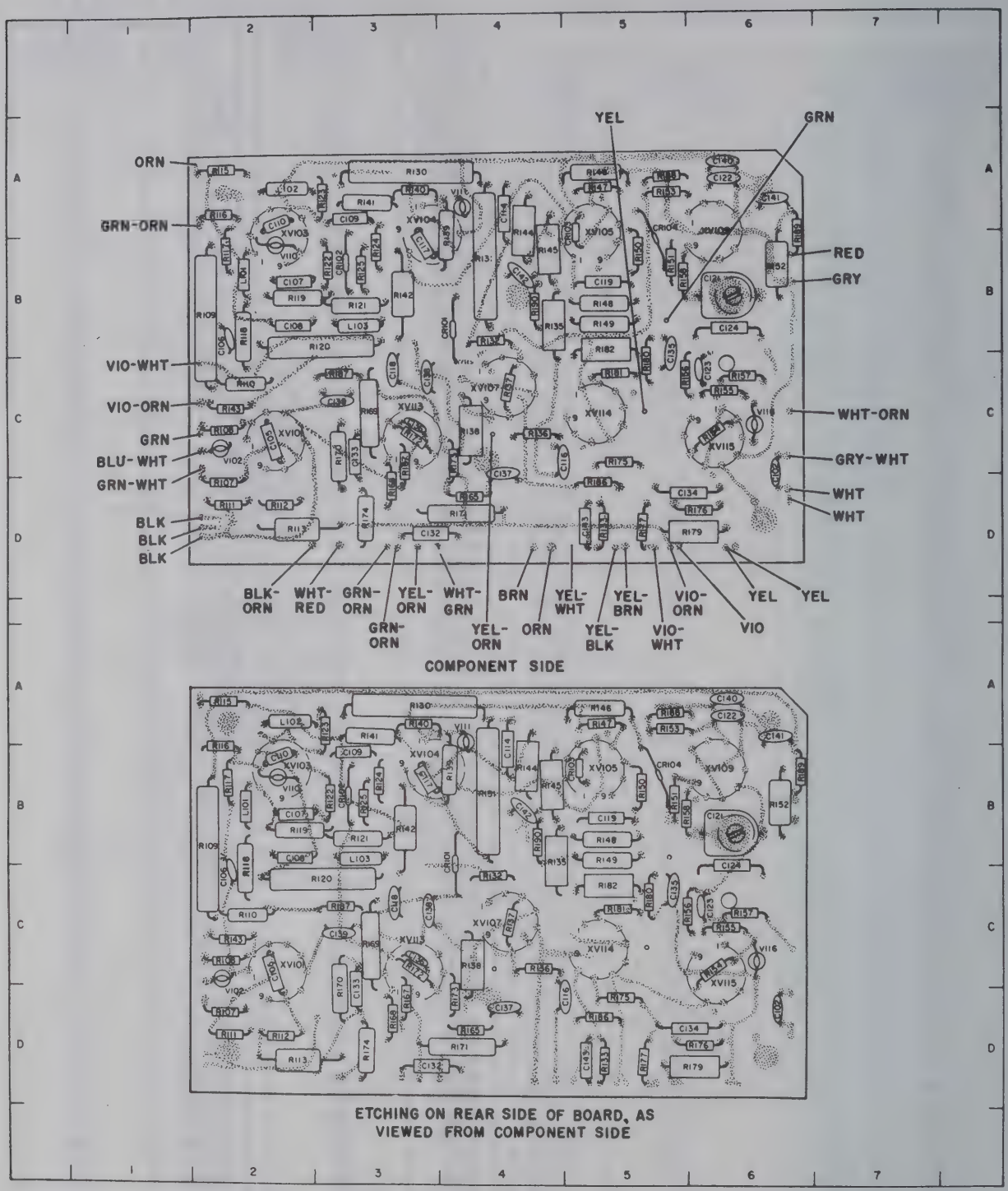

(SEE INDEX ON PAGE 5-32A)

Figure 5-17A. Sweep Generator Etched Circuit Assembly A101, Location of Parts
(SEE INDEX ON PAGE 5-32A)

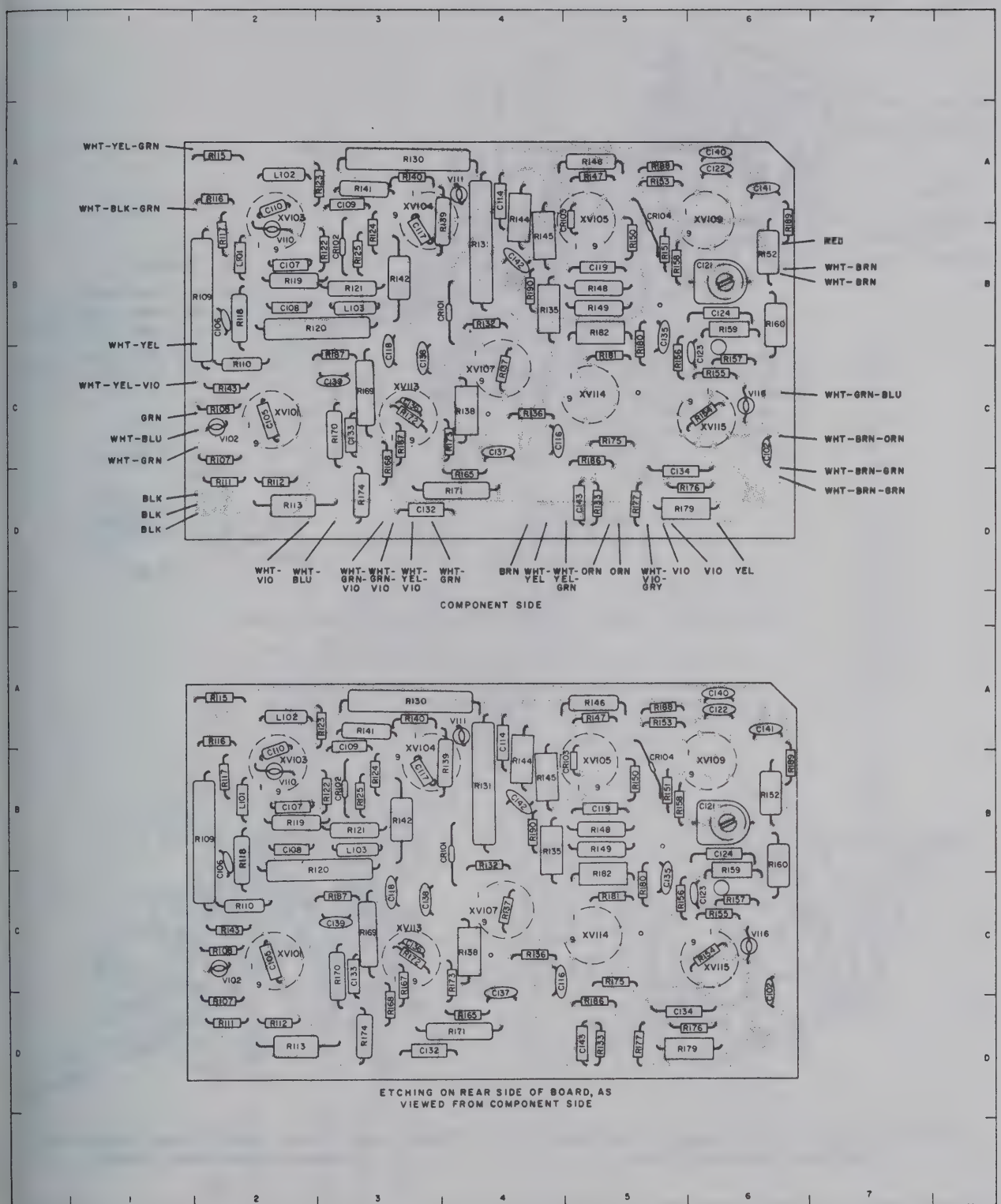

Figure 5-17. Sweep Generator Etched Circuit Assembly, Location of Parts

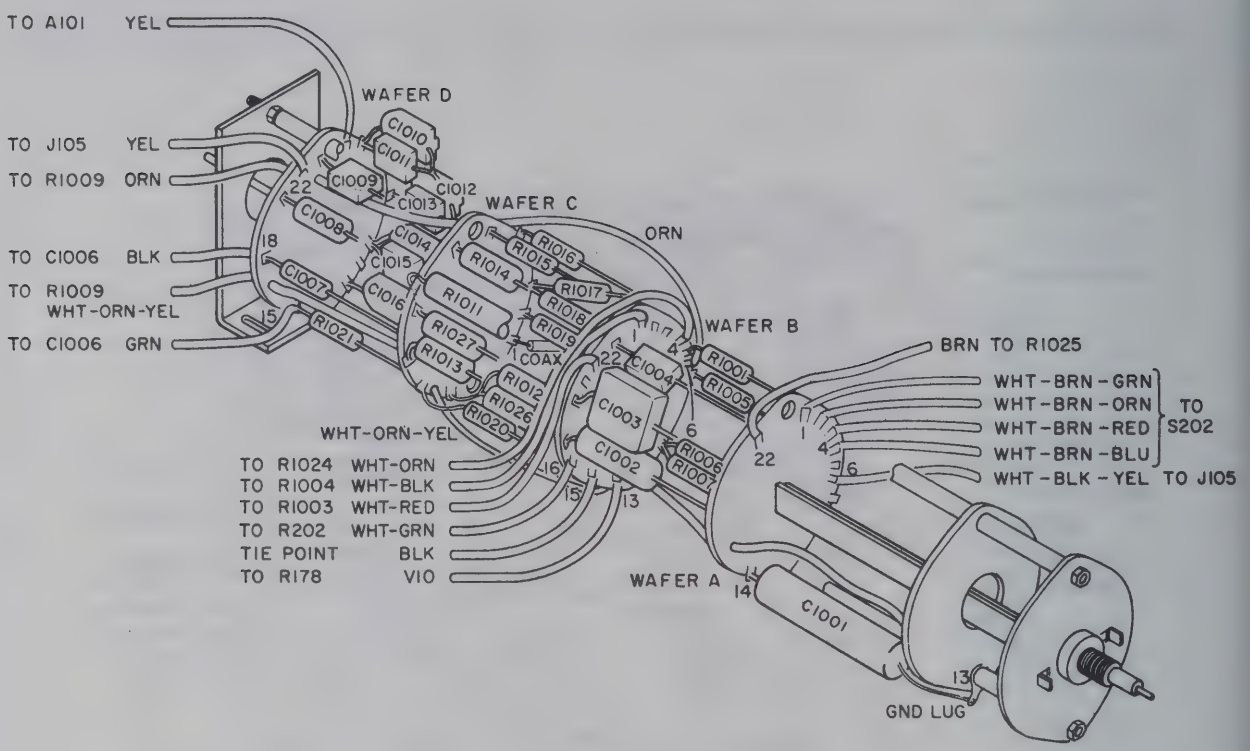

Figure 5-18. Sweep Time Switch Assembly, Location of Parts

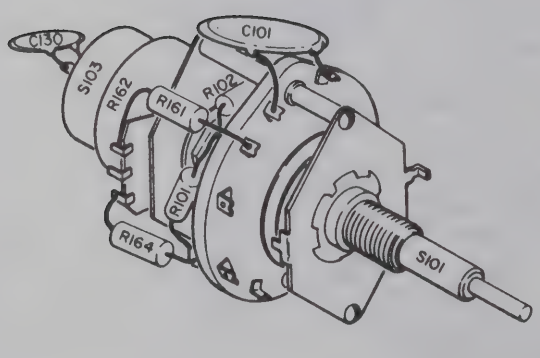

Figure 5-19. Sweep Mode/Trigger Source Switch Assembly, Location of Parts

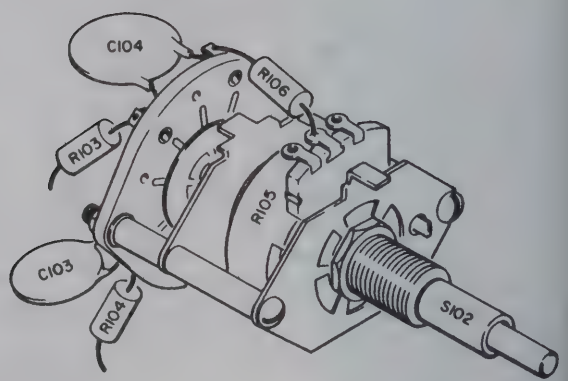

Figure 5-20. Trigger Level/Trigger Slope Switch Assembly, Location of Parts

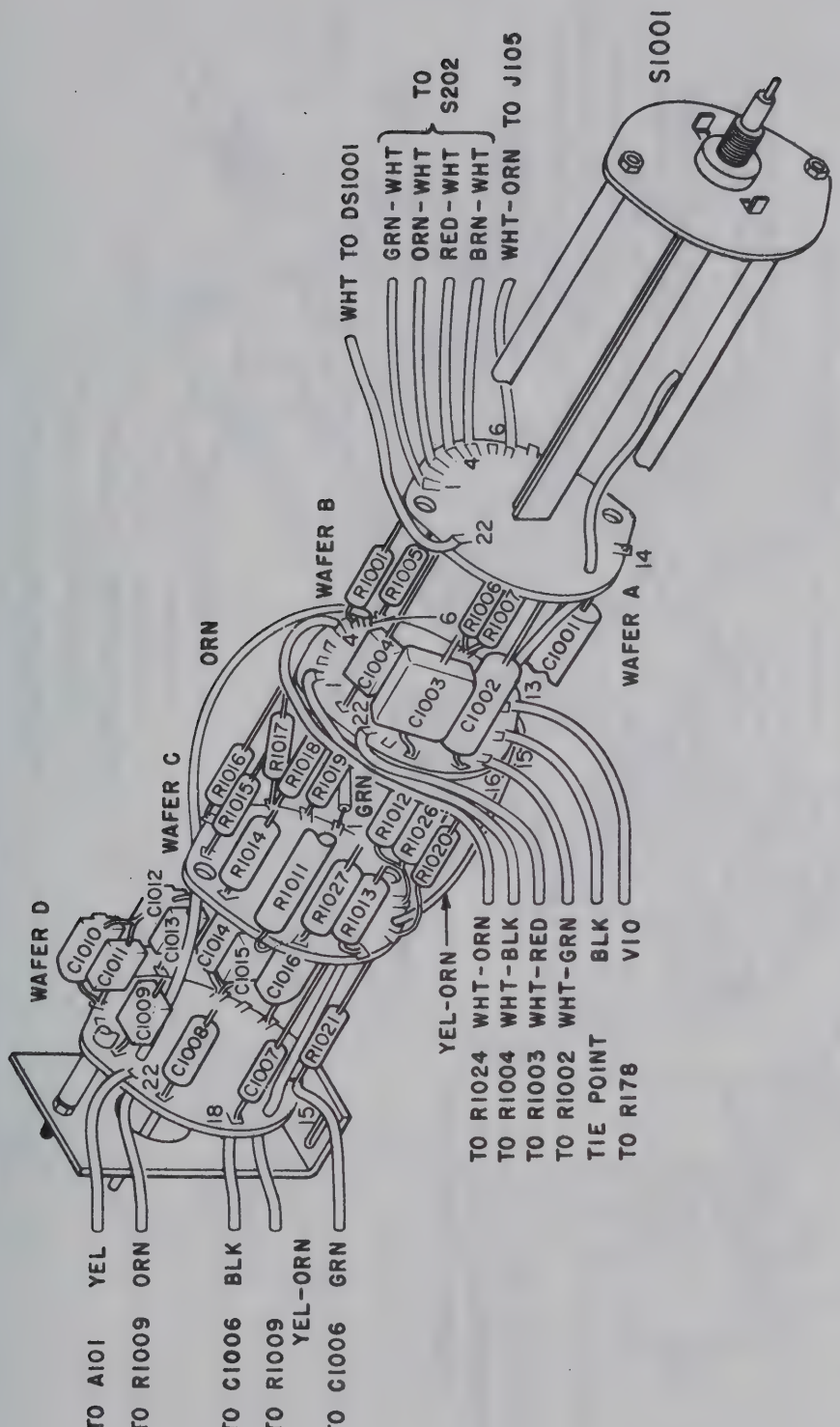

Figure 5-18A. Sweep Time Switch Assembly A1001, Location of Parts AN/USM-140C

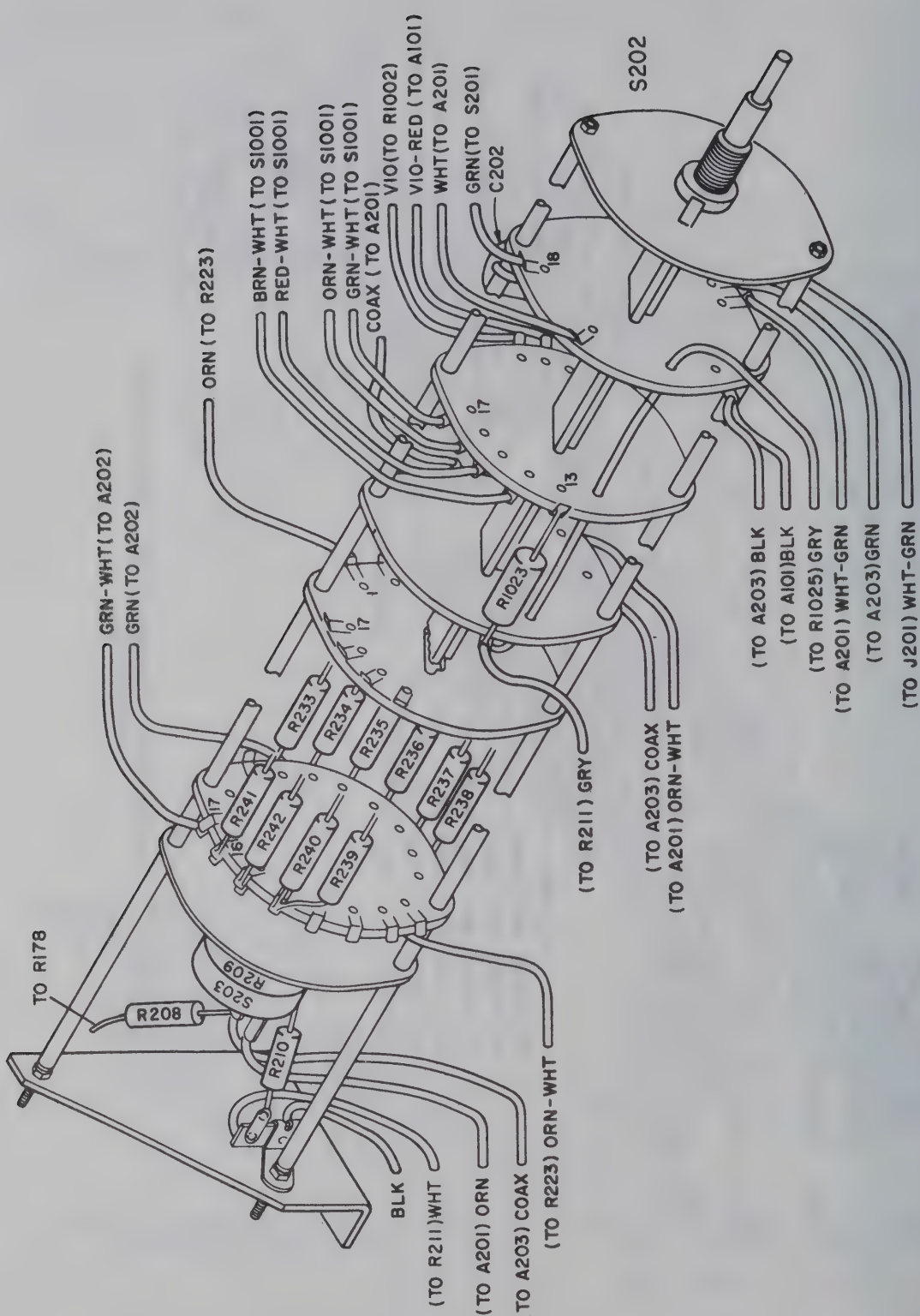

Figure 5-21A. External Vernier/Horizontal Display Switch Assembly A200, Location of Parts AN/USM-140C

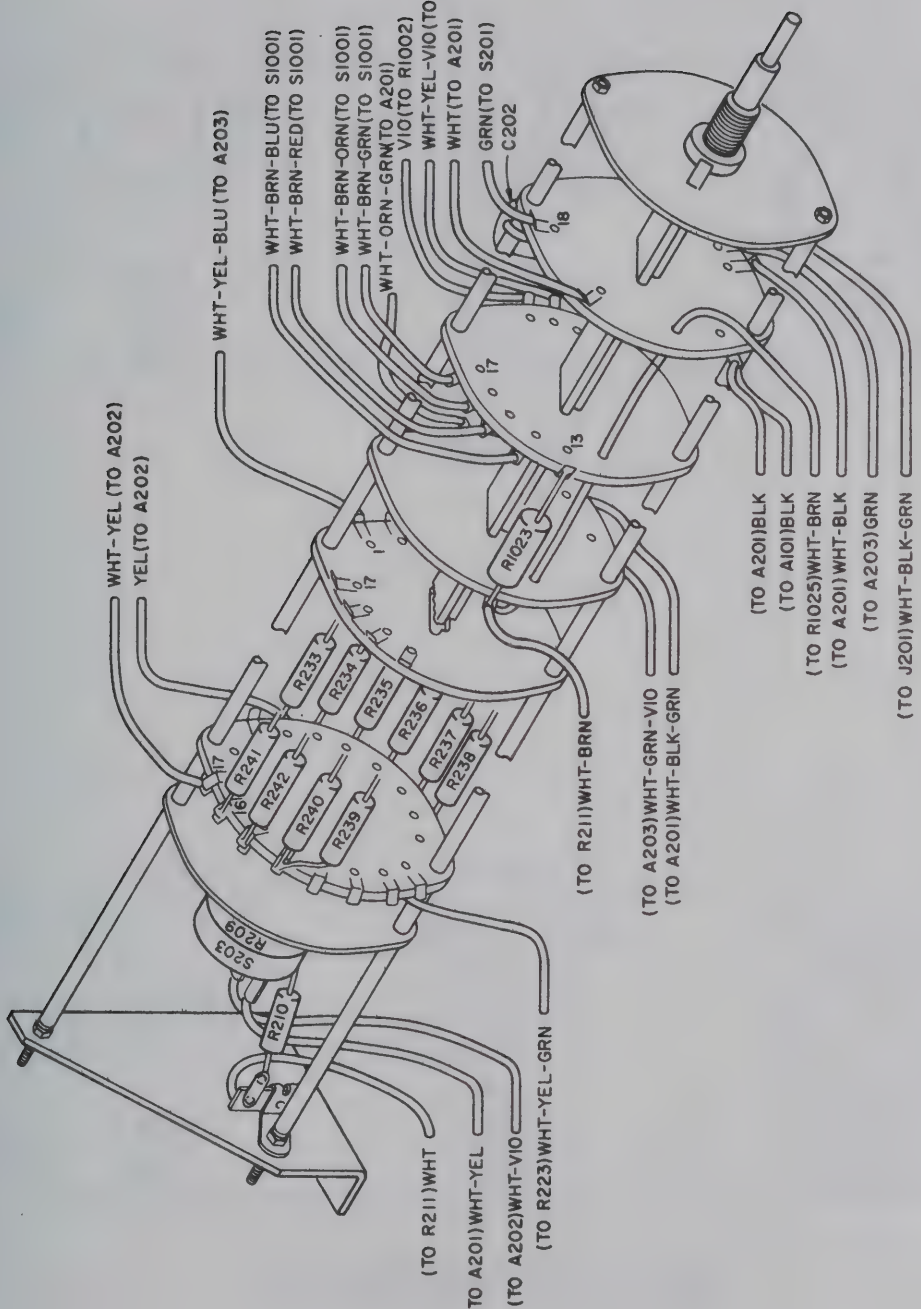

Figure 5-21. Ext. Vernier/Horizontal Display Switch Assembly, Location of Parts

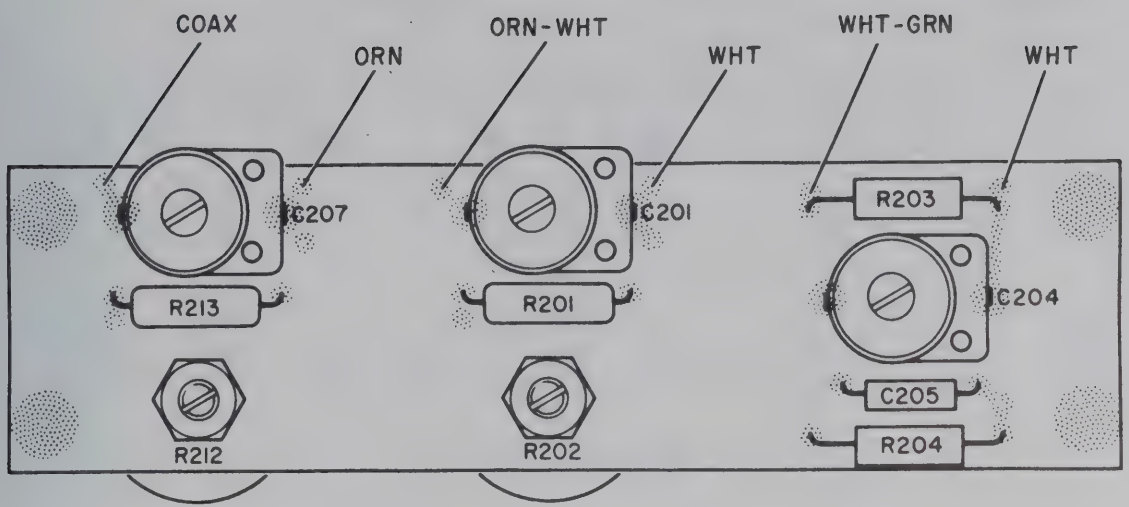

COMPONENT SIDE

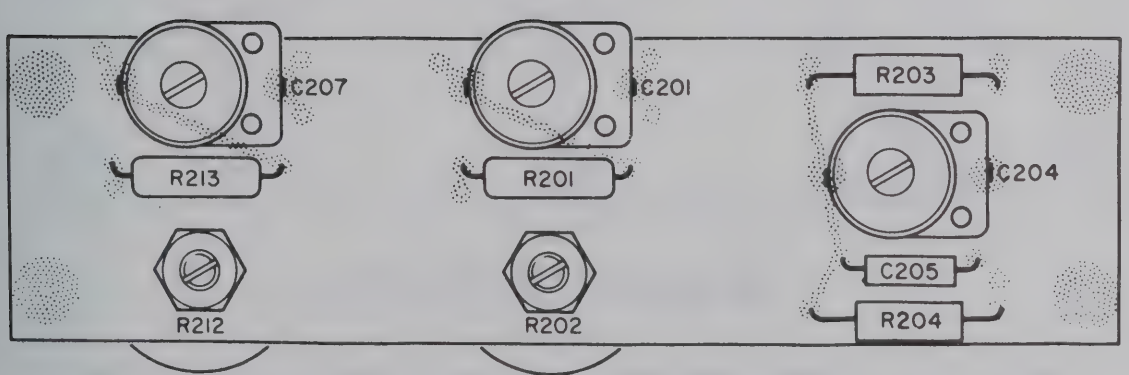

ETCHING ON REAR SIDE OF BOARD,
AS VIEWED FROM COMPONENT SIDE

Figure 5-22A. Horizontal Sensitivity Adjustment Etched Circuit Assembly A201, Location of Parts AN/USM-140C

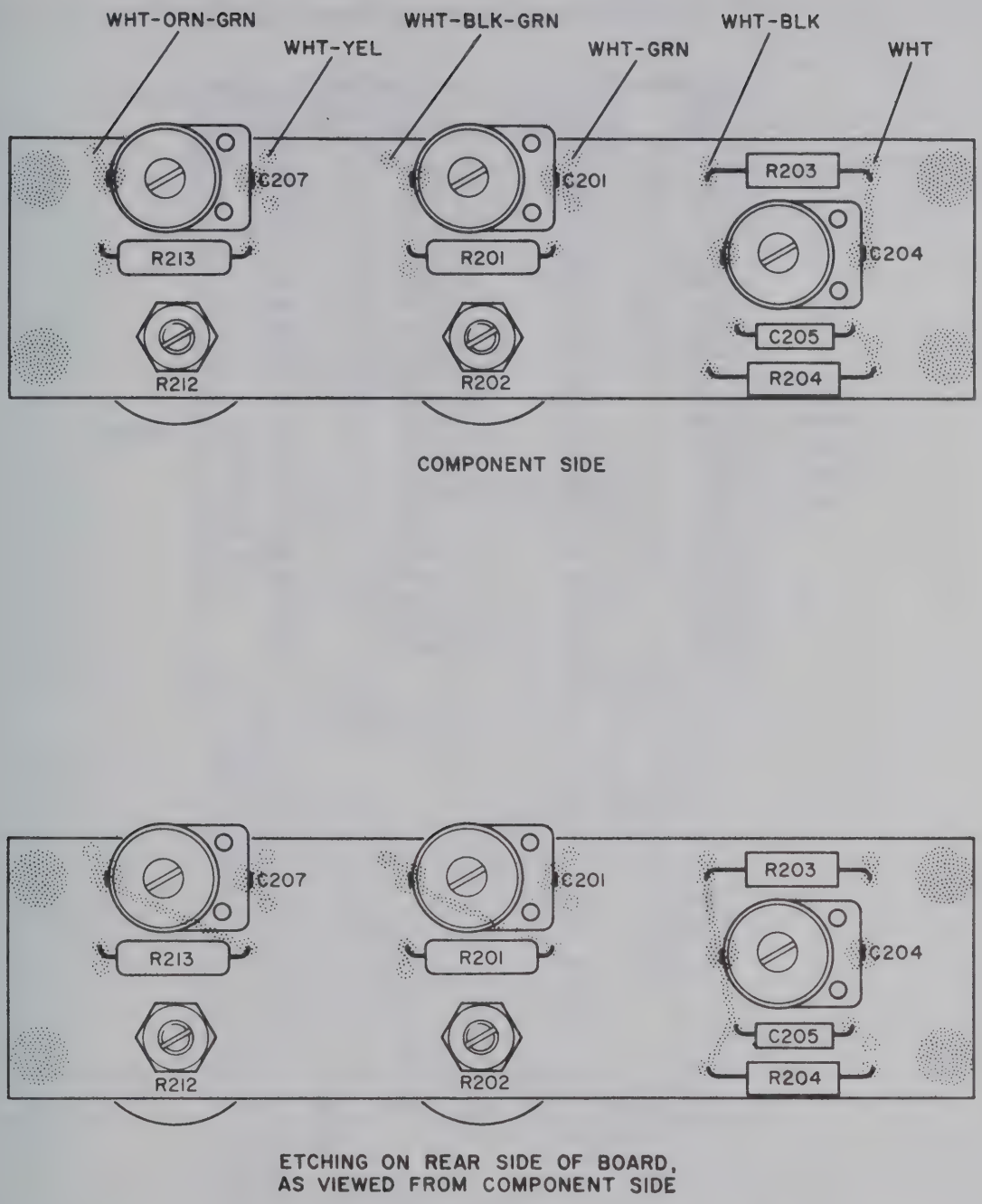

Figure 5-22. Horizontal Sensitivity Adjustment Etched Circuit Assembly, Location of Parts

PARTS LOCATION INDEX FOR FIGURE 5-23

REF. DESIG.	DRAWING LOCATION
C211	A2
C212	A3
C213	C3
C214	D3
C215	A6
C216	A6
C222	C6
L201	A4
L202	D4
Q201	A3
Q202	C2
R244	A2
R245	A3
R246	A3
R247	B3
R248	B3
R249	B3
R250	B3
R251	B3
R252	C3
R253	B3
R254	C3
R255	A3

REF. DESIG.	DRAWING LOCATION
R256	A3
R257	C4
R258	C3
R259	D2
R260	D4
R264	B5
R266	A4
R267	B4
R268	A4
R269	C4
R271	A5
R272	A5
R273	C5
R274	C5
R275	C5
R276	C5
R278	A5
XV203	B4
XV204	A3
XV205	C3
XV206	B5
XV207	A5

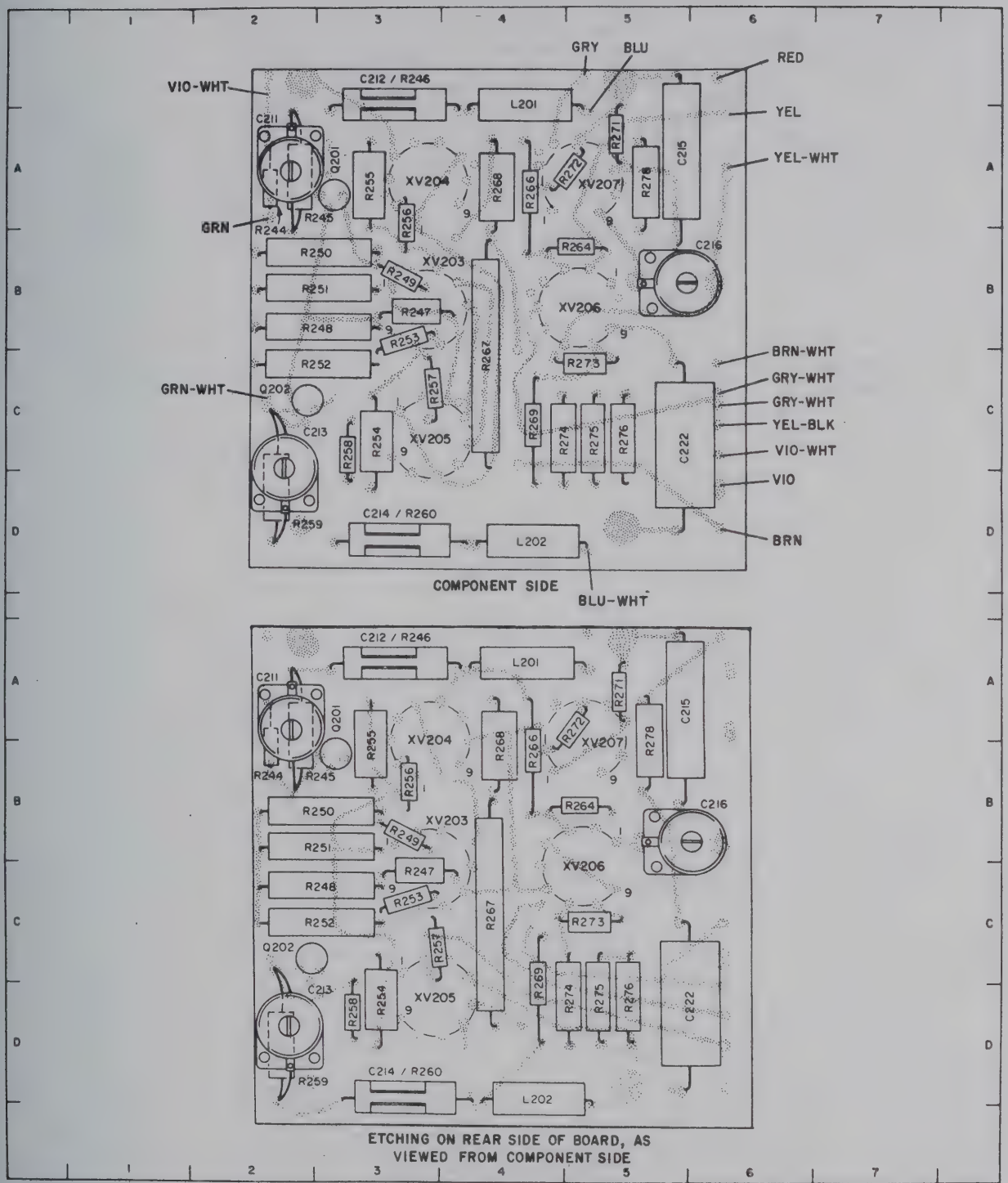

(SEE INDEX ON PAGE 5-38)

Figure 5-23A. Main Horizontal Amplifier Assembly A202, Parts Location, AN/USM-140C

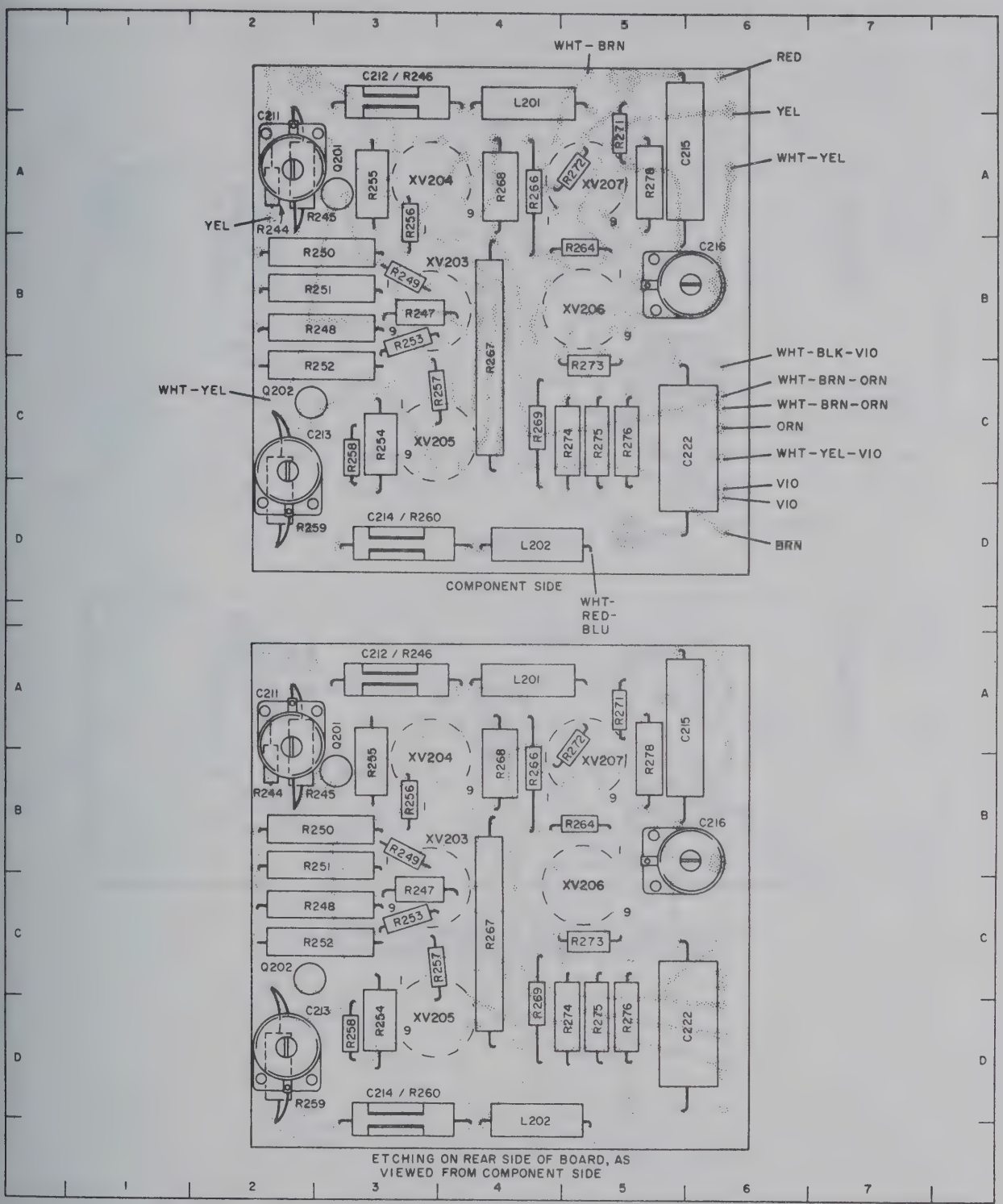

Figure 5-23. Main Horizontal Amplifier and Driver Etched Circuit Assembly, Location of Parts

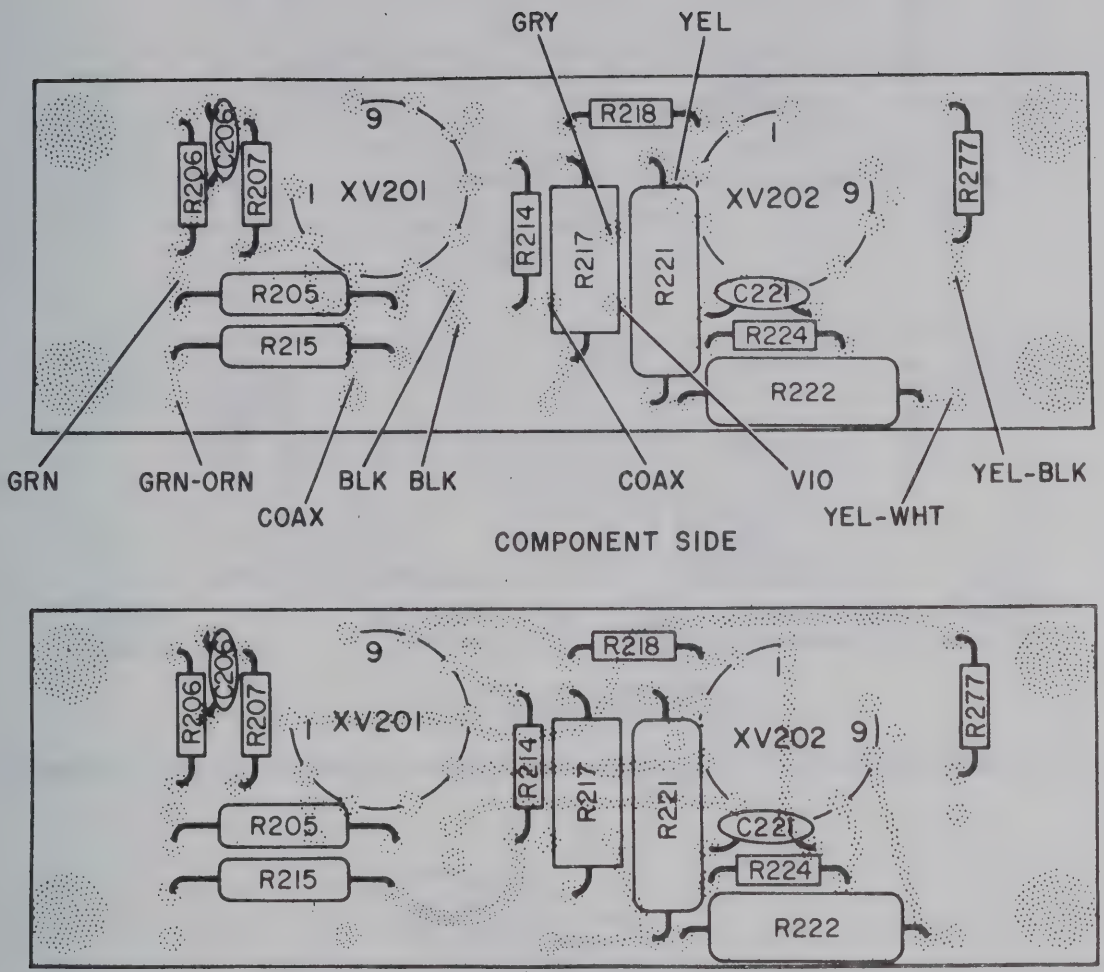

ETCHING ON REAR SIDE OF BOARD, AS VIEWED FROM COMPONENT SIDE

Figure 5-24A. Horizontal Impedance Matching Preamp Etched Circuit Assembly A203, Location of Parts, AN/USM-140C

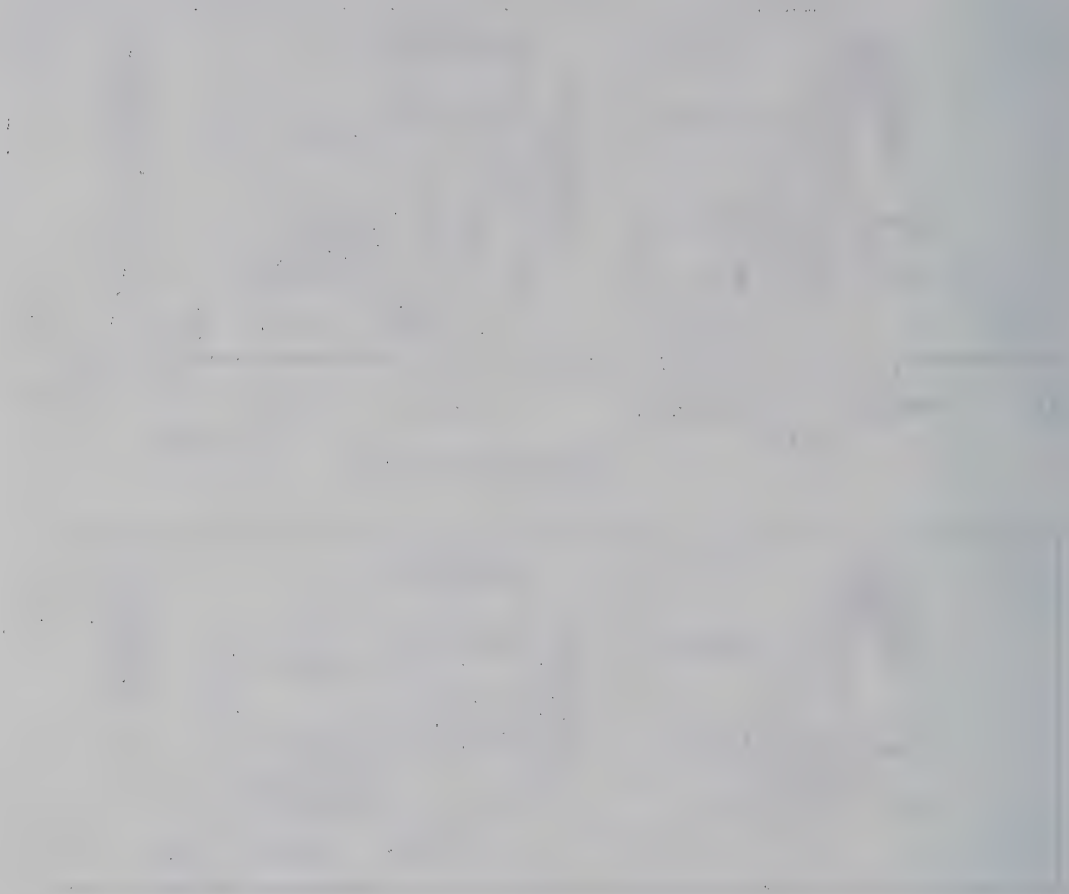

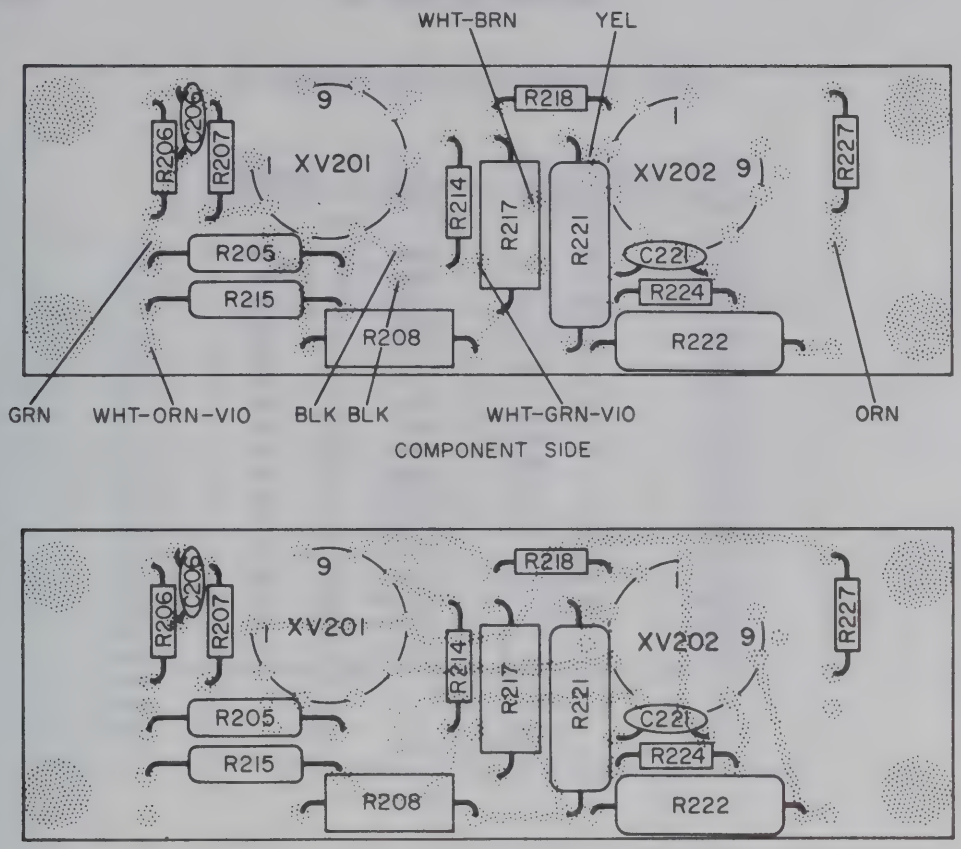

Figure 5-24. Horizontal Impedance Matching Previous Etched Circuit Assembly, Location of Parts

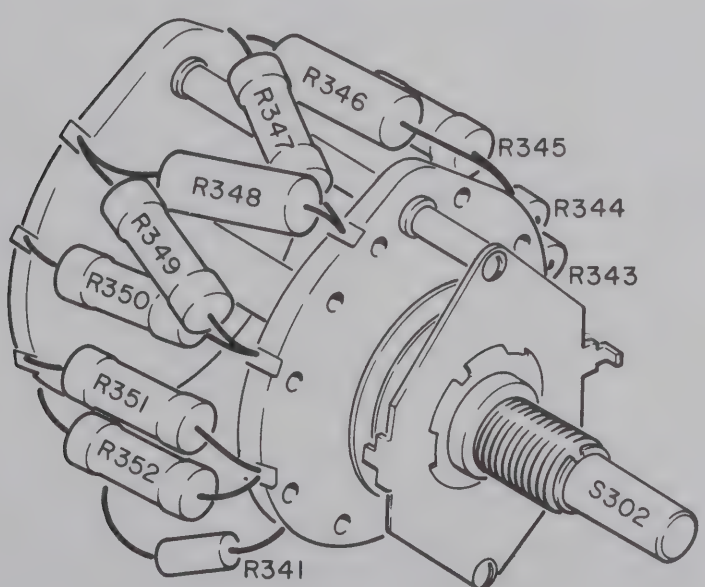

Figure 5-25. Calibrator Switch Assembly, Location of Parts

PARTS LOCATION INDEX FOR FIGURE 5-26

REF. DESIG.	DRAWING LOCATION
C301	D5
C302	B5
C303	B4
C304	A3
C310	B2
C316	C7
C317	C6
L301	C5
R302	B5
R303	C5
R304	C5
R305	B5
R306	C5
R308	B4
R309	B4
R312	A2
R319	B5

REF. DESIG.	DRAWING LOCATION
R335	B7
R336	B6
R337	D6
R338	B7
R339	C7
R340	D7
R342	C6
R367	B6
V303	C5
XV301	C5
XV304	B5
XV306	C7
XV307	B7
XV308	B1
XV309	C1
XV310	C3
XV311	C4

PARTS LOCATION INDEX FOR FIGURE 5-26A

REF. DESIG.	DRAWING LOCATION
C301	D5
C302	B5
C303	B4
C304	A3
C310	B2
C316	C7
C317	C6
L301	C5
R302	B5
R303	C5
R304	C5
R305	B5
R306	C5
R308	B4
R309	B4
R312	A2
R319	B5

REF. DESIG.	DRAWING LOCATION
R335	B7
R336	B6
R337	D6
R338	B7
R339	C7
R340	D7
R342	B6
R367	C6
V303	C5
XV301	C5
XV304	B5
XV306	C7
XV307	B7
XV308	B1
XV309	C1
XV310	C3
XV311	C4

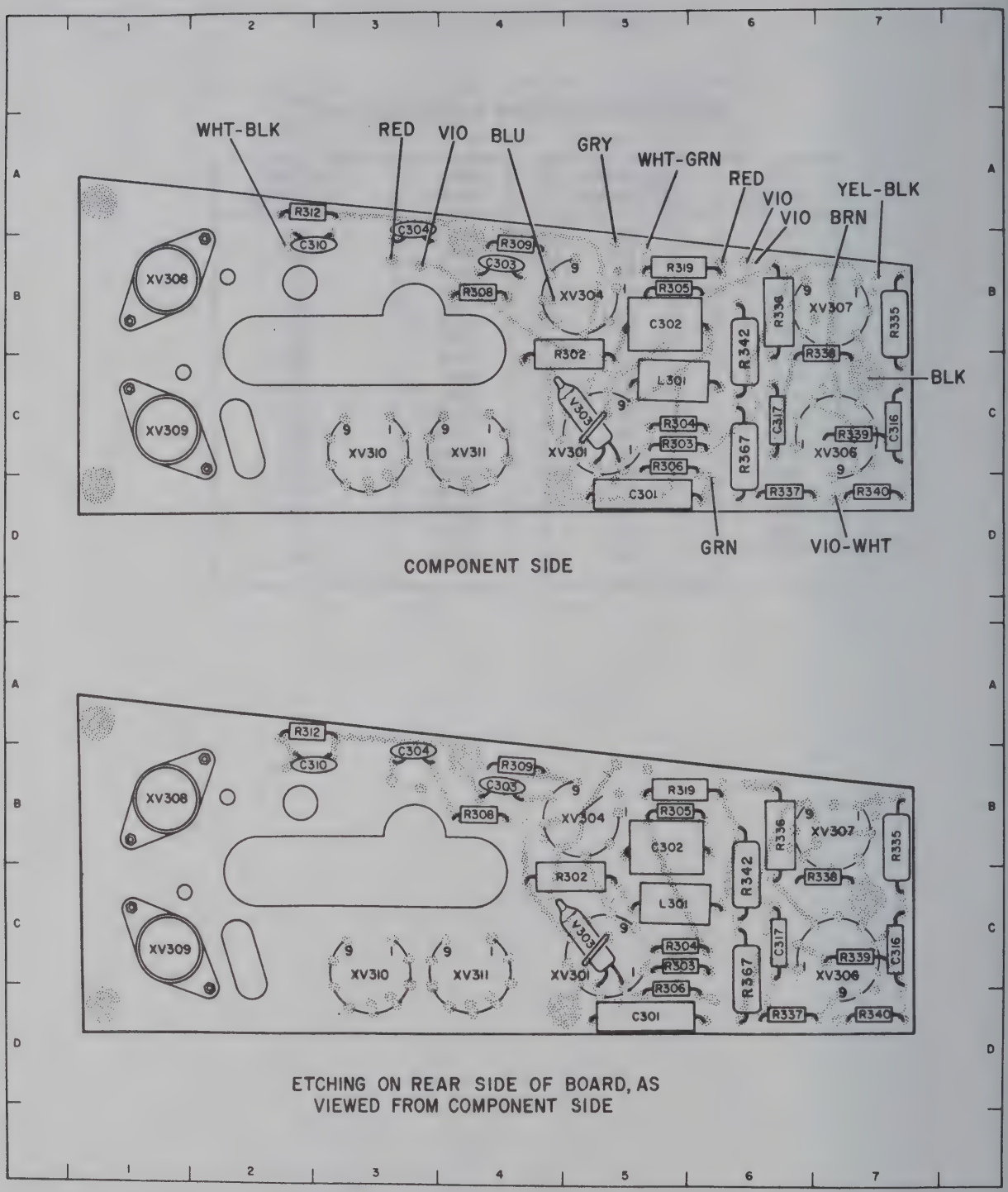

Figure 5-26A. High-Voltage Power Supply Etched Circuit Assembly A301, Location of Parts, AN/USM-140C

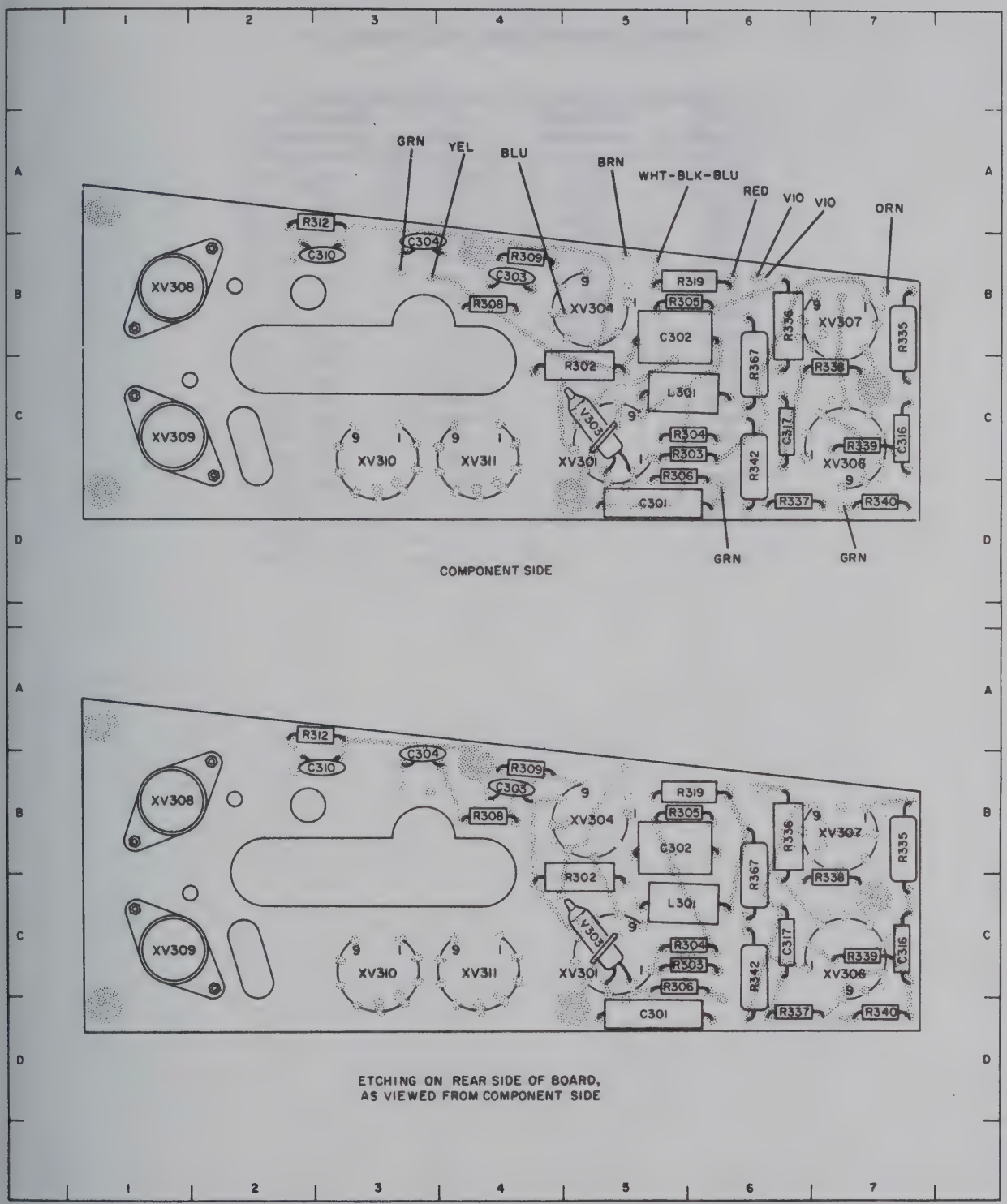

Figure 5-26. High-Voltage Power Supply Etched Circuit Assembly, Location of Parts

PARTS LOCATION INDEX FOR FIGURE 5-27

REF. DESIG.	DRAWING LOCATION
C307	B4
C308	C2
C309	C6
C311	B5
C312	B2
C313	C5
C314	A2
R313	B7
R314	B7
R315	C7
R316	B6
R317	B6
R318	B6
R322	C3
R323	C4
R325	D3
R326	D5

REF. DESIG.	DRAWING LOCATION
R327	D6
R328	D5
R331	C1
R332	D2
R333	B1
R334	B1
R355	B2
R356	A2
R357	A5
R358	B3
R359	B3
R360	A4
R362	A3
R364	B2
R365	B3
R366	B3

PARTS LOCATION INDEX FOR FIGURE 5-27A

REF. DESIG.	DRAWING LOCATION
C307	C4
C308	C1
C309	C6
C311	C6
C312	C2
C313	C5
C314	C1
R313	A7
R314	C7
R315	D7
R316	D7
R317	C7
R318	A7
R322	C4
R323	D4
R325	D4
R326	D5

REF. DESIG.	DRAWING LOCATION
R327	D6
R328	D5
R331	D1
R332	D3
R333	C1
R334	A1
R355	A2
R356	C3
R357	A5
R358	A3
R359	B3
R360	A4
R362	A3
R364	B3
R365	B3
R366	B3

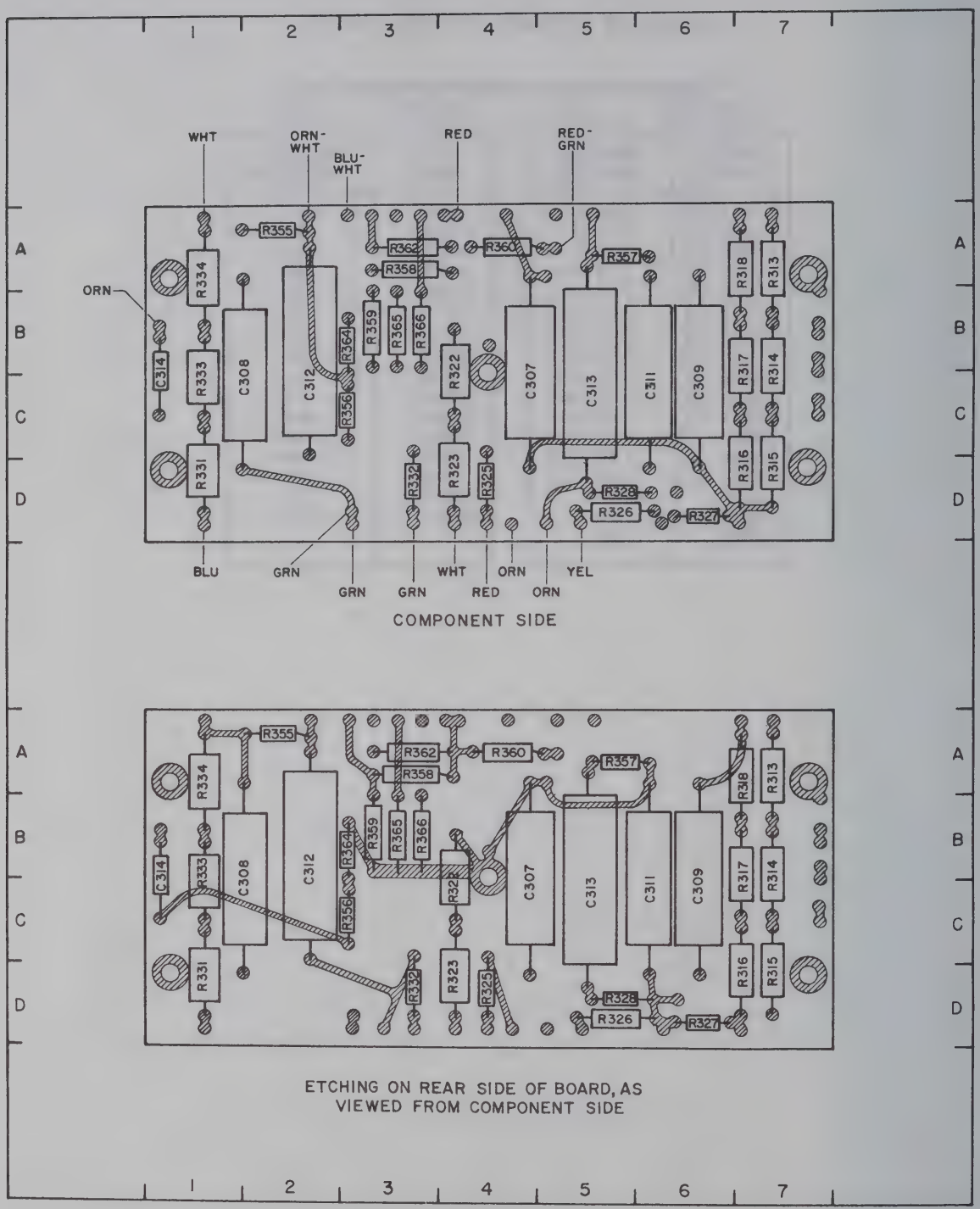

Figure 5-27A. High Voltage Distribution Etched Circuit Assembly, Location of Parts

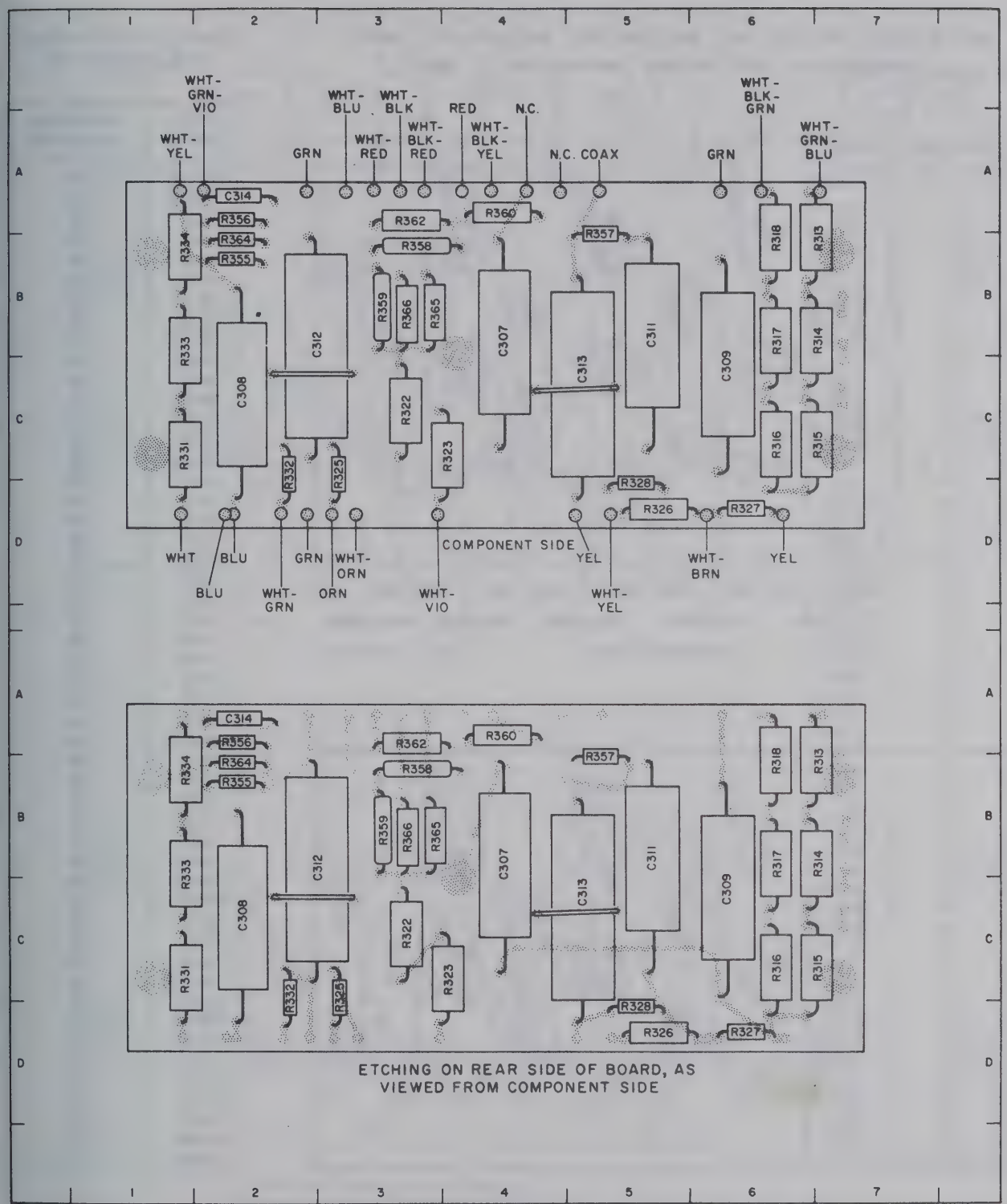

Figure 5-27. High-Voltage Distribution Etched Circuit Assembly, Location of Parts

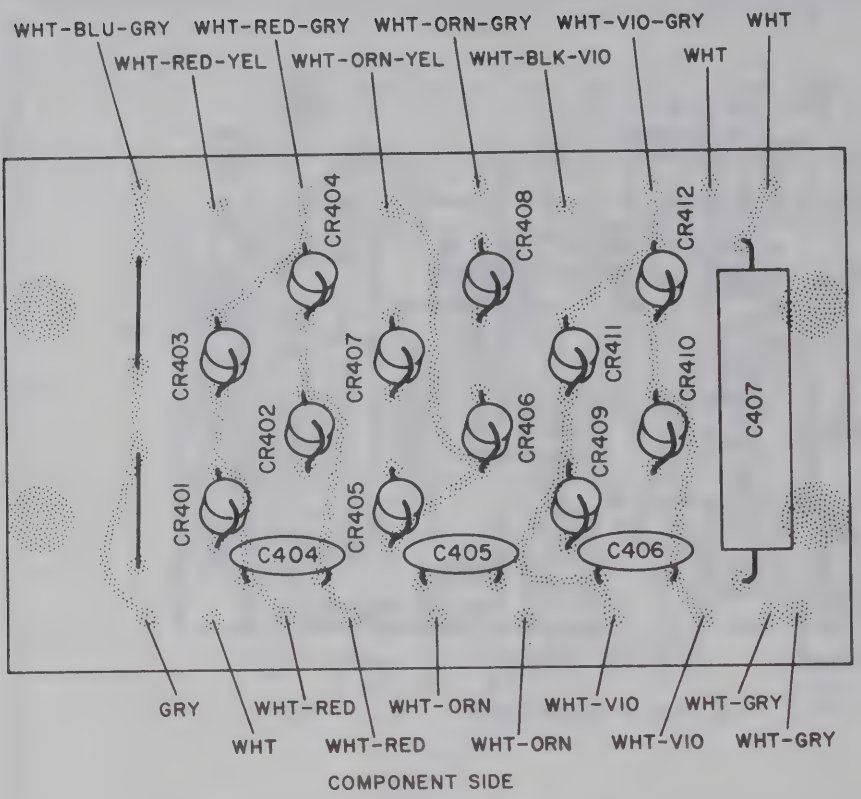

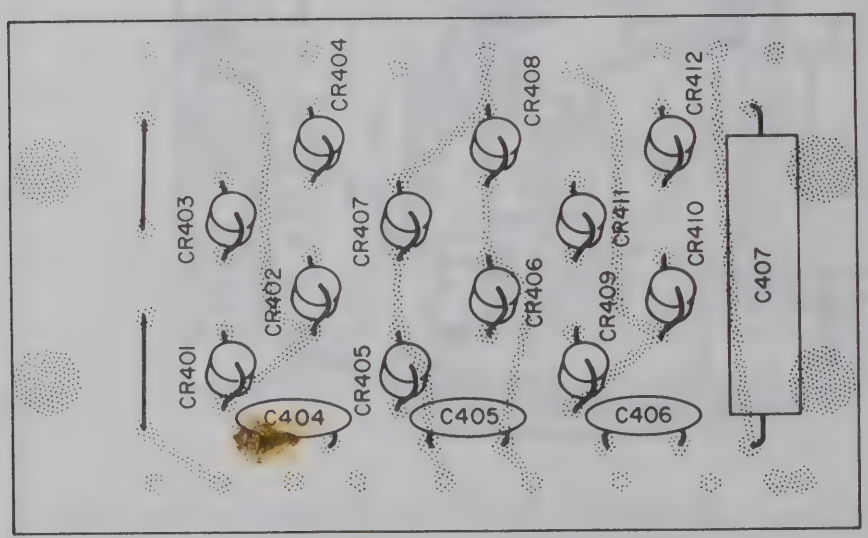

ETCHING ON REAR SIDE OF BOARD,
AS VIEWED FROM COMPONENT SIDE

Figure 5-28. Low-Voltage Rectifier Etched Circuit Assembly, Location of Parts

PARTS LOCATION INDEX
FOR FIGURE 5-29

REF. DESIG.	DRAWING LOCATION
CR413	B5
CR416	B3
C409	A4
C412	C3
C413	B5
C417	A5
C418	C6
C419	C5
C426	A2
Q401	D3
Q402	B3
Q406	C5
Q407	C4
Q408	B5
Q410	B6
Q411	B6
Q412	B6
Q414	B3
Q415	B2
R408	C2
R409	D4
R410	D2
R412	B2
R413	D3
R415	C2
R416	C4
R417	C2
R425	A4
R426	A4
R427	C5
R428	D4
R430	D5
R432	C4
R433	C5
R434	C4
R435	C4
R443	A6
R444	A6
R445	B6
R446	A5
R447	B5
R448	C6
R449	B5
R450	C6
R451	D6
R459	A3
R461	B3
R462	B3
R463	C2
XV401	C6

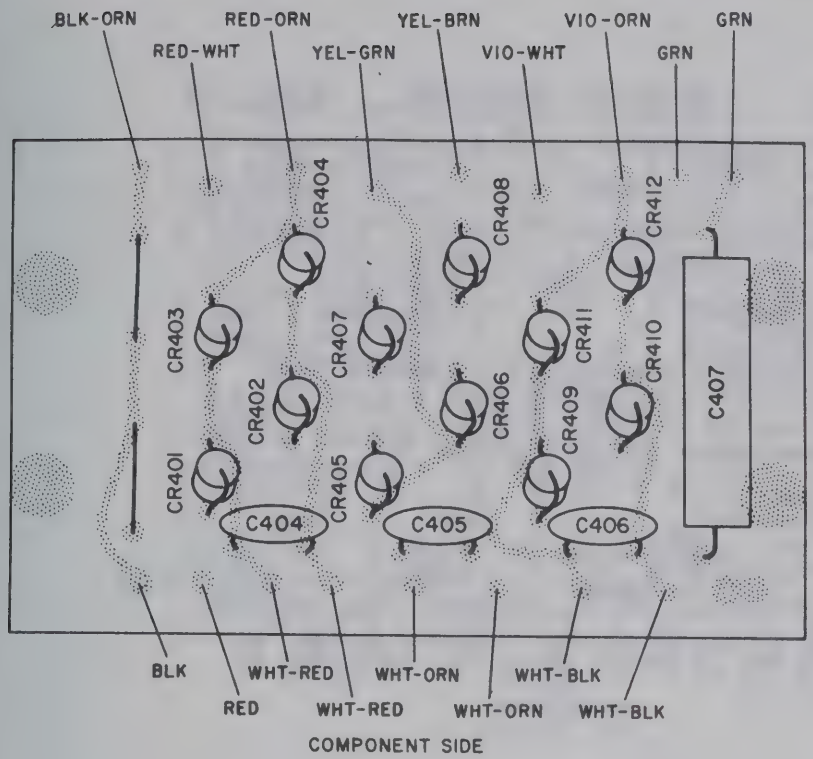

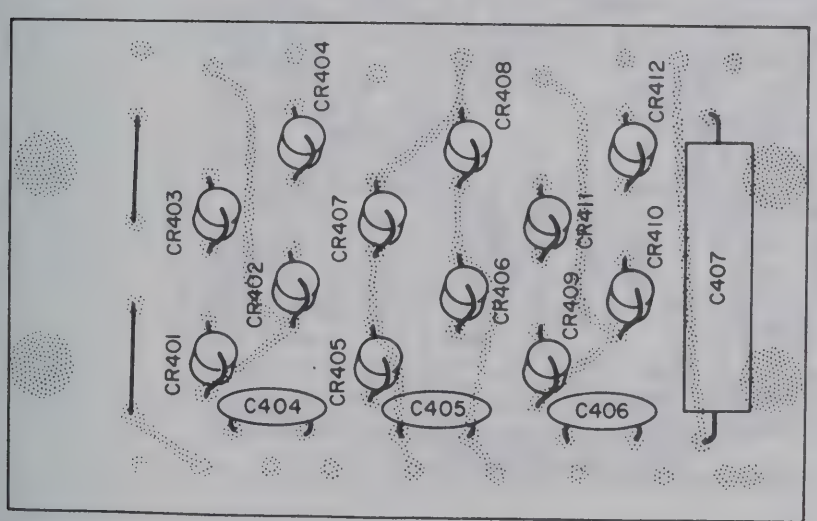

ETCHING ON REAR SIDE OF BOARD,
AS VIEWED FROM COMPONENT SIDE

PARTS LOCATION
INDEX FOR
FIGURE 5-29A

REF. DESIG.	DRAWING LOCATION
CR413	B5
CR416	B3
C409	A4
C412	C3
C417	A5
C418	C6
C419	C5
C426	A2
Q401	D3
Q402	B3
Q406	C5
Q407	C4
Q408	B5
Q410	B6
Q411	B6
Q412	B6
Q414	B3
Q415	B2
R408	C2
R409	D4
R410	D2
R412	B2
R413	D3
R415	C2
R416	C4
R417	C2
R425	A4
R426	A4
R427	C5
R428	D4
R430	D5
R432	C4
R433	C5
R434	C4
R435	C4
R443	A6
R444	A6
R445	B6
R446	A5
R447	B5
R448	C6
R449	B5
R450	C6
R451	D6
R459	A3
R461	B3
R462	B3
R463	C2
XV401	C6

Figure 5-28A. Low-Voltage Rectifier Etched Circuit Assembly A401, Parts Location AN/USM-140C

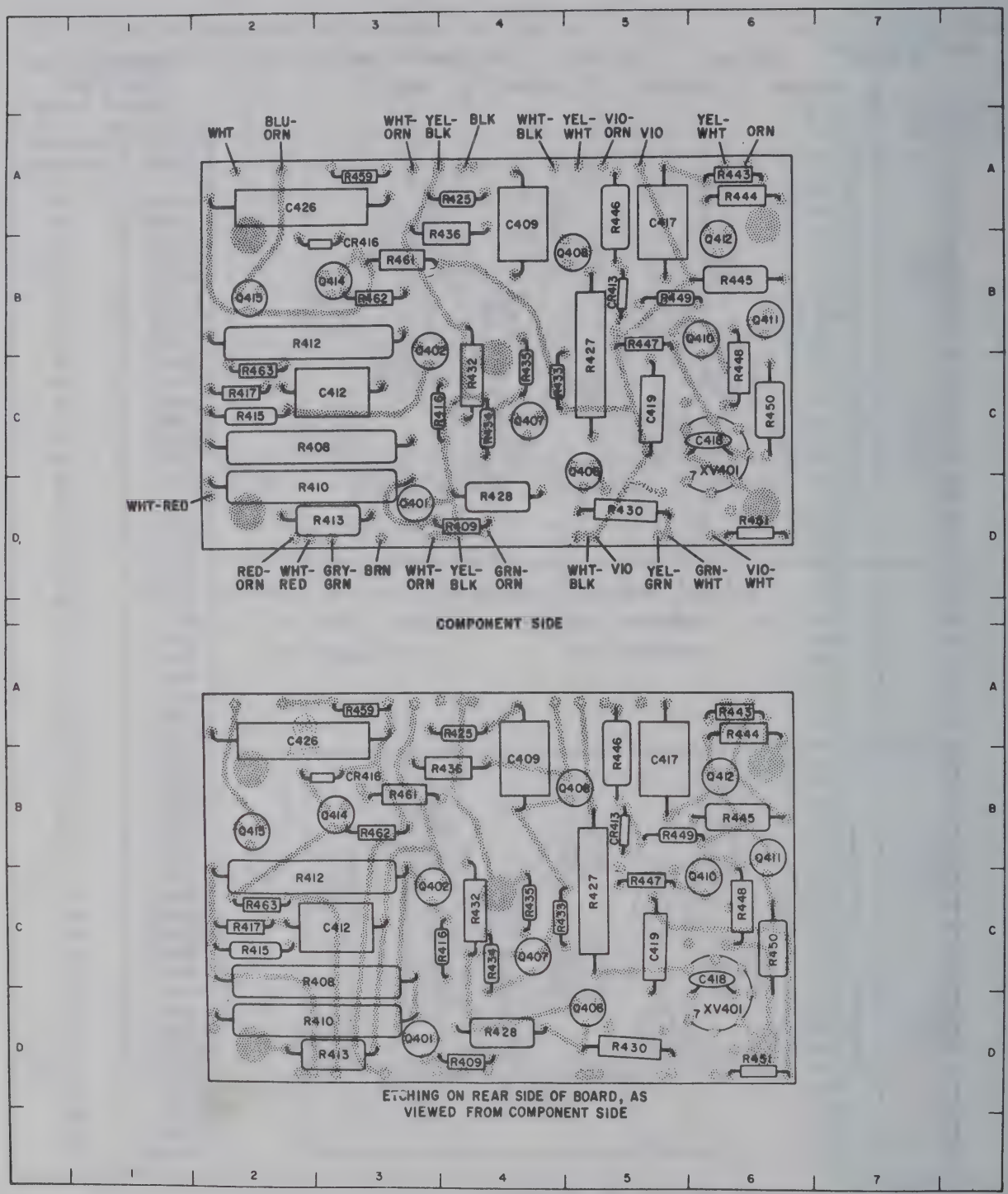

Figure 5-29A. Low-Voltage Regulator Amplifier Etched Circuit Assembly A402, Parts Location, AN/USM-140C

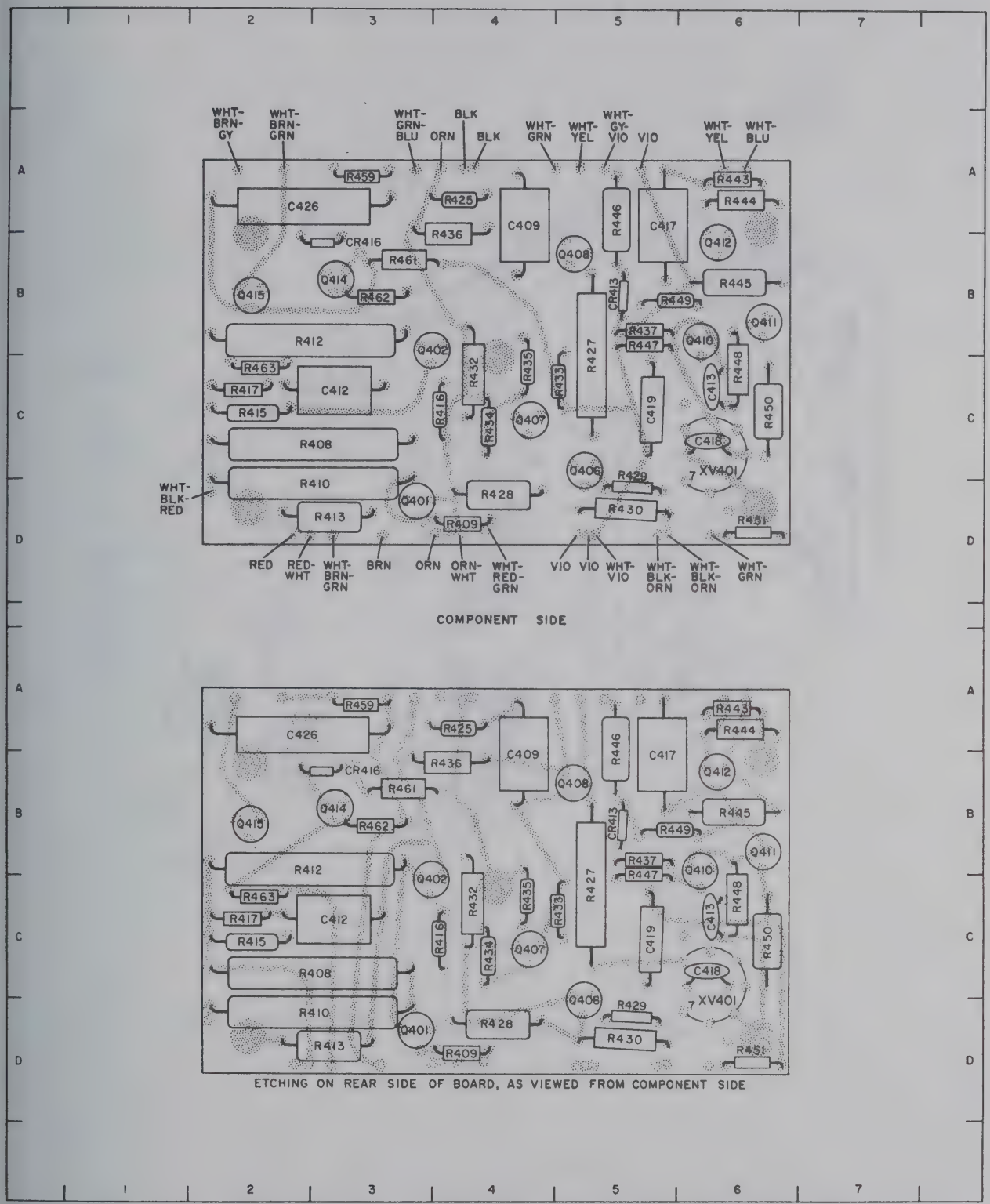

Figure 5-29. Low-Voltage Regulator Amplifier Etched Circuit Assembly, Location of Parts

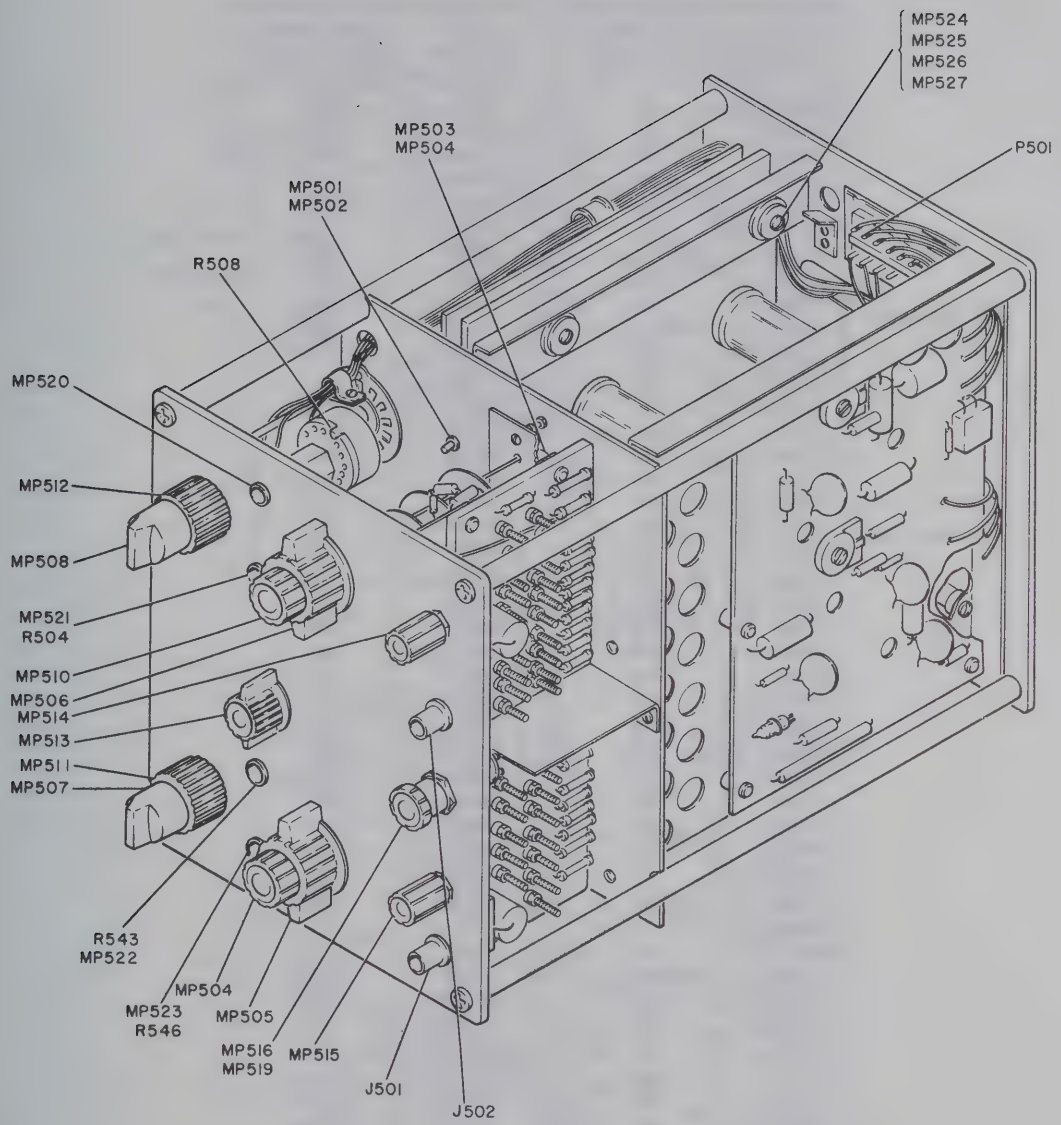

Figure 5-30. MX-2930B/USM, Location of Parts

PARTS LOCATION INDEX FOR FIGURE 5-31

REF. DESIG.	DRAWING LOCATION
CR501	A3
CR505	D3
C503	B5
C504	A2
C516	B5
C517	C6
C518	B6
C522	B3
C523	C3
L501	B4
L502	A3
L503	B3
L505	A3
L508	C3
L510	C3
L511	C4
L512	C3
L514	B4
L515	A3
L516	B2
L517	C2
L518	C5
L519	C3
Q501	B4
Q502	A3
Q503	C4
Q504	D3
R501	B5
R502	B5
R503	B5
R505	A5
R507	A5
R509	A5
R512	A4
R513	A4
R514	B4
R515	A4
R516	B4
R517	A3
R519	A4
R521	A3
R522	A2
R523	C3

REF. DESIG.	DRAWING LOCATION
R524	B3
R527	B6
R528	A6
R529	D4
R531	D3
R532	C4
R533	D2
R534	C4
R535	C3
R536	D4
R537	C4
R538	D4
R539	D4
R542	D5
R544	D5
R545	D5
R547	C5
R548	C5
R549	C5
R550	D6
R552	C4
R571	B3
R572	A3
R573	C3
R574	C3
R575	C4
R580	C5
R581	B5
R582	B4
R583	B3
R584	B3
R585	C2
R586	B2
R587	C2
R588	C4
R589	C3
XV501	B5
XV502	A5
XV503	B3
XV504	C5
XV505	C5
XV506	C3

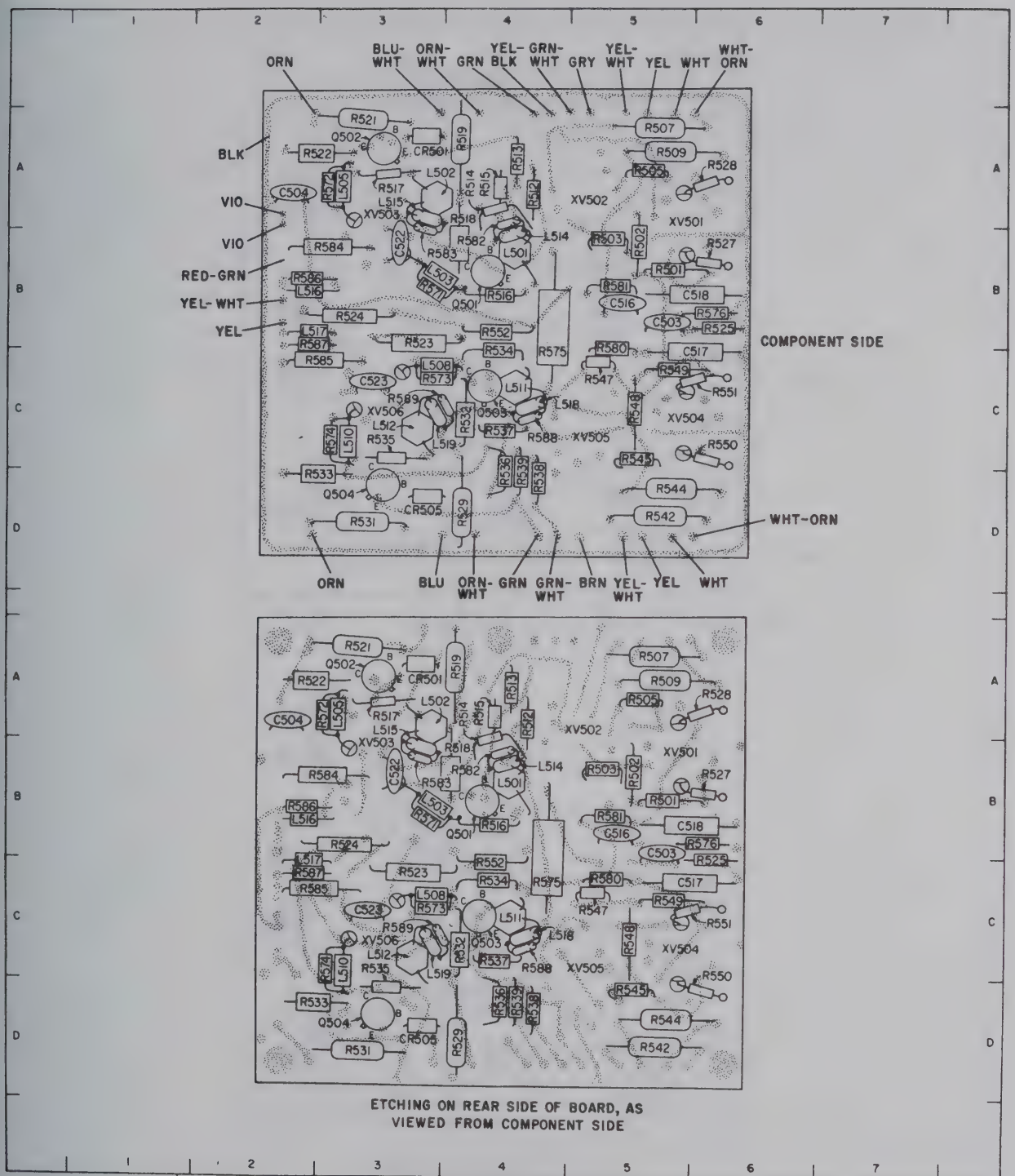

(SEE INDEX ON PAGE 5-50)

Figure 5-31A. MX-2930C/USM Dual Channel Vertical Amplifier Etched Circuit Assembly A501, Location of Parts

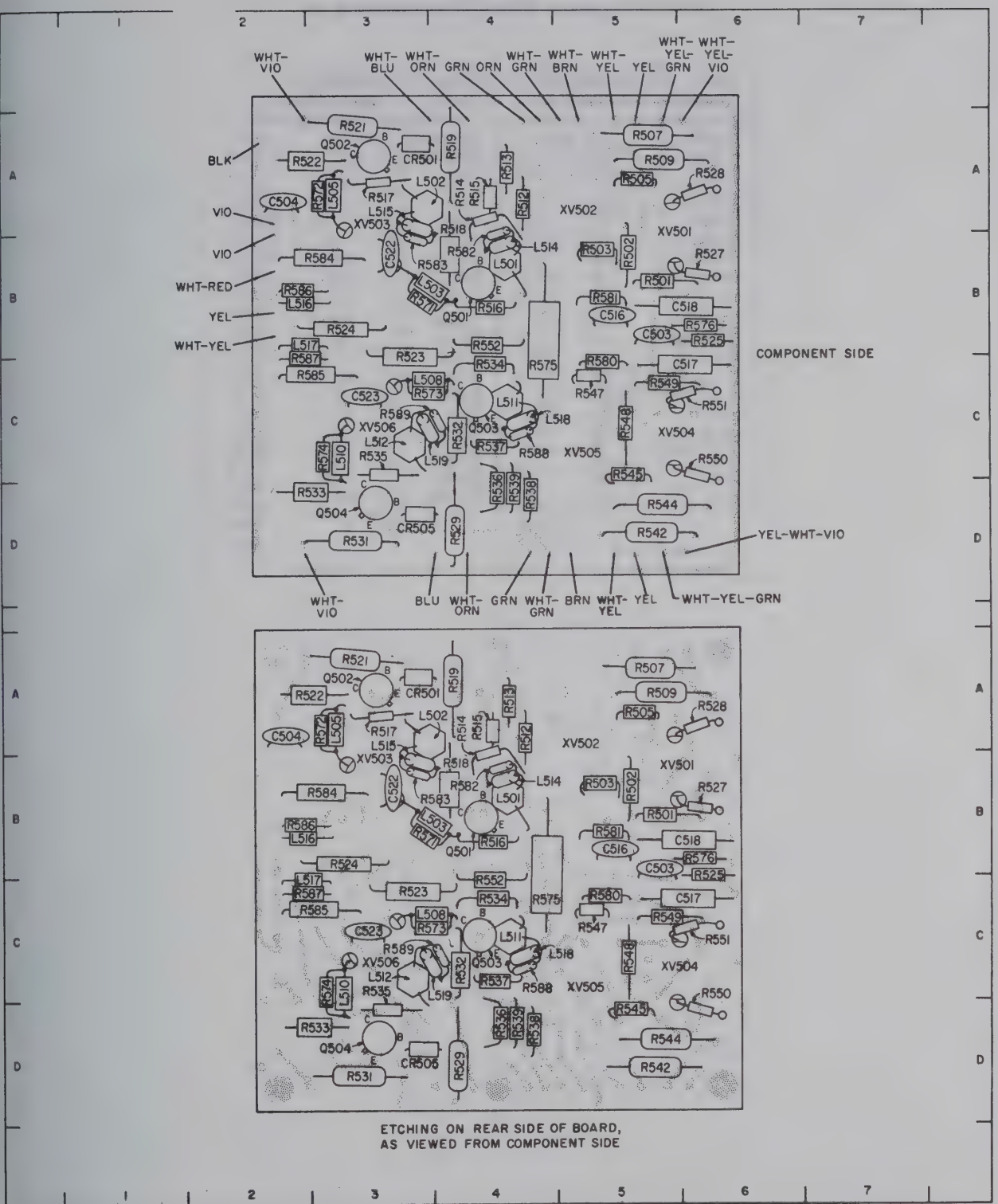

Figure 5-31. MX-2930B/USM Dual Channel Vertical Amplifier Etched Circuit Assembly, Location of Parts

PARTS LOCATION INDEX FOR FIGURE 5-32

REF. DESIG.	DRAWING LOCATION
CR502	B4
CR503	B4
CR504	D5
CR506	B4
C506	C5
C507	C3
C508	D5
C509	A3
C510	C4
C511	B3
C515	A4
C519	A5
L513	A4
R526	C3
R554	D4
R555	D5
R556	D3
R557	D3
R559	C4

REF. DESIG.	DRAWING LOCATION
R560	C5
R562	A4
R563	A3
R564	B4
R565	C4
R566	C4
R567	B3
R568	B3
R569	C3
R570	B4
R579	A4
R588	C4
R591	B5
R592	A5
R593	B5
T501	B5
V509	C3
XV507	D4
XV508	B4

PARTS LOCATION INDEX FOR FIGURE 5-32 A

REF. DESIG.	DRAWING LOCATION
CR502	B4
CR503	B4
CR504	D5
CR506	B4
C506	C5
C507	C3
C508	D5
C509	A3
C510	C4
C511	B3
C515	A4
C519	A5
L513	A4
R526	C3
R554	D4
R555	D5
R556	D3
R557	D3
R559	C4

REF. DESIG.	DRAWING LOCATION
R560	C5
R562	A4
R563	A3
R564	B4
R565	C4
R566	C4
R567	B3
R568	B3
R569	C3
R570	B4
R579	A4
R588	C4
R591	A5
R592	B5
R593	B5
T501	B5
V509	C3
XV507	D4
XV508	B4

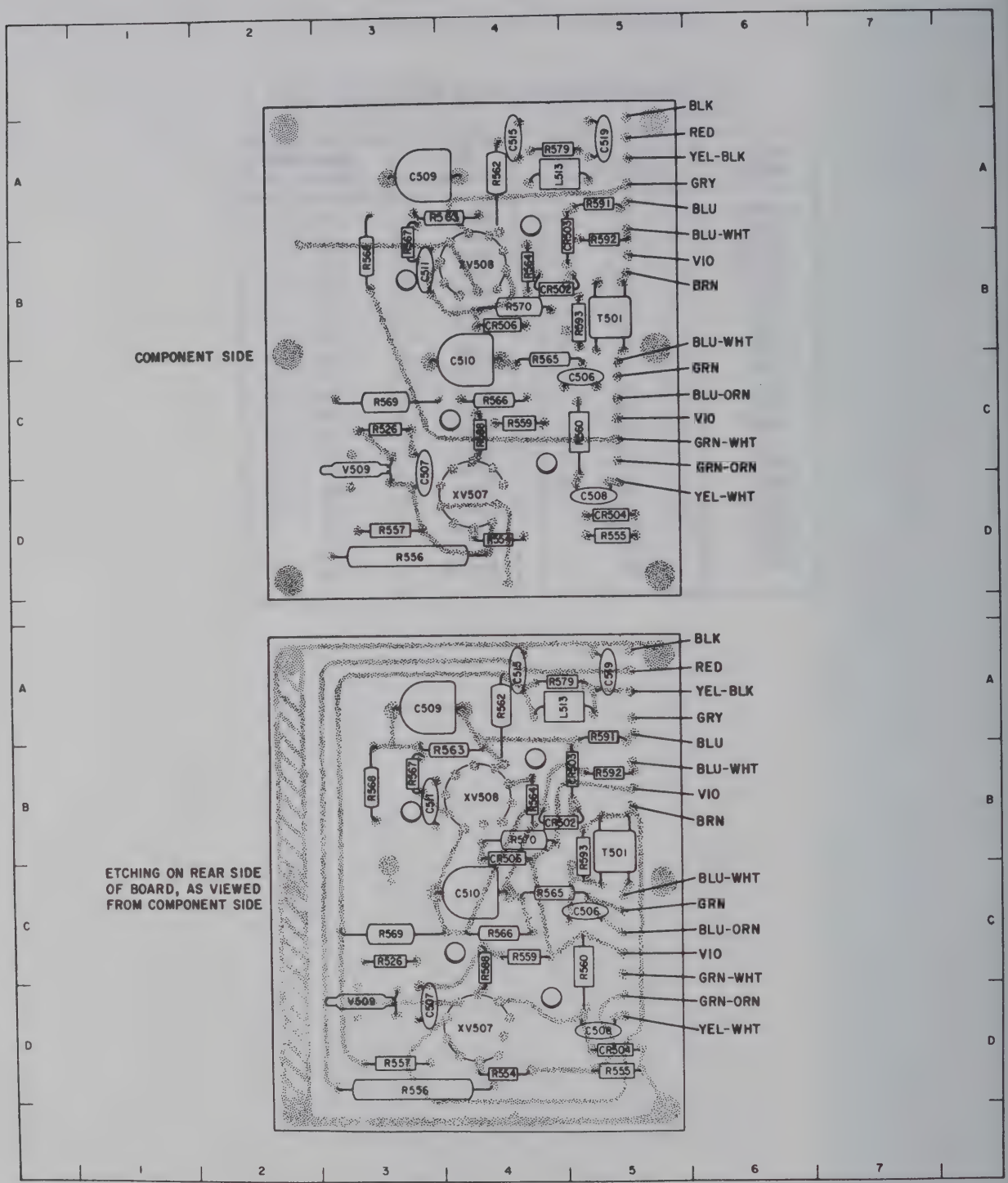

(SEE INDEX ON PAGE 5-52)

Figure 5-32A. MX-2962C/USM Vertical Switching Etched Circuit Assembly A502, Location of Parts

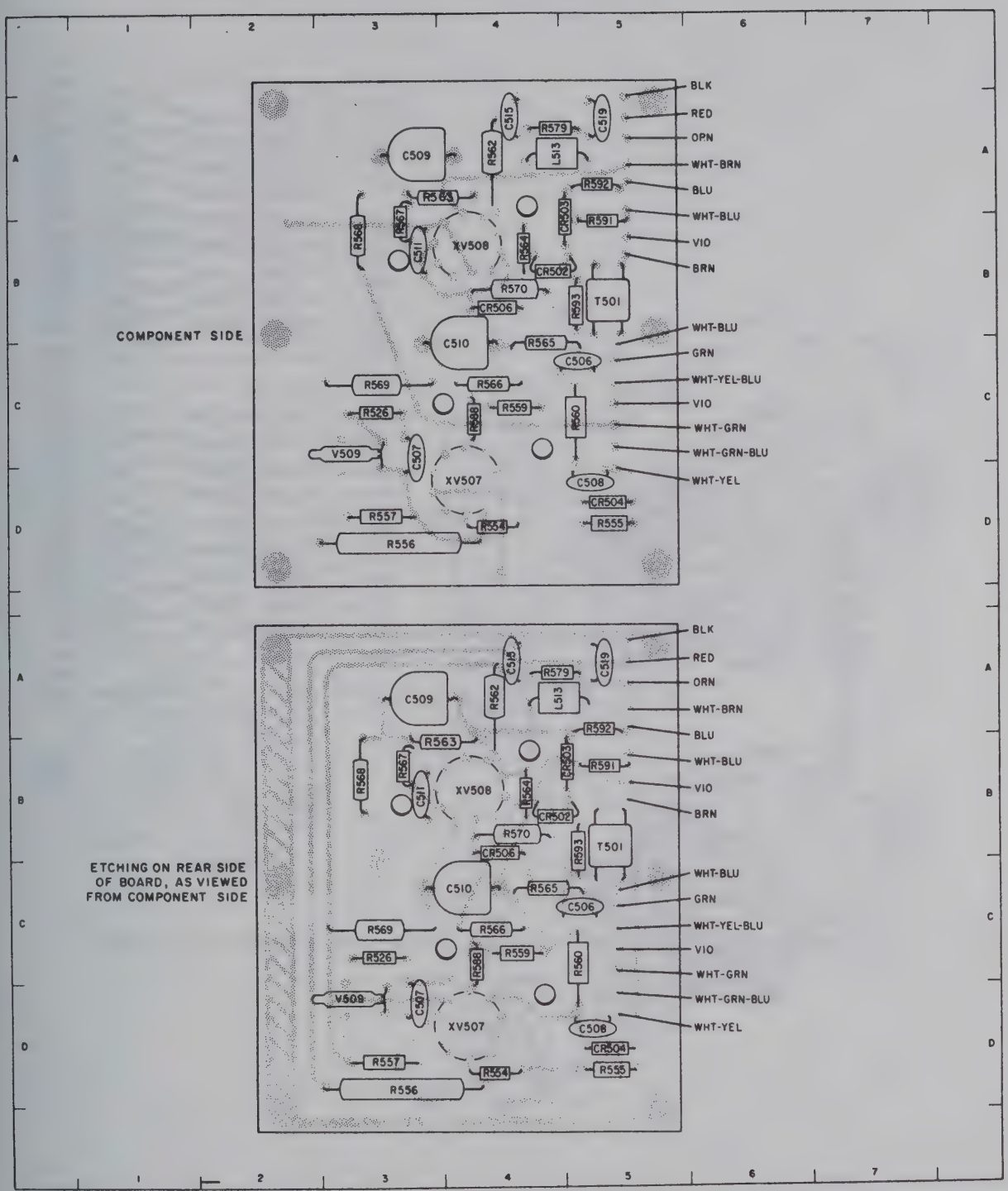

Figure 5-32. MX-2930B/USM Vertical Switching Etched Circuit Assembly, Location of Parts

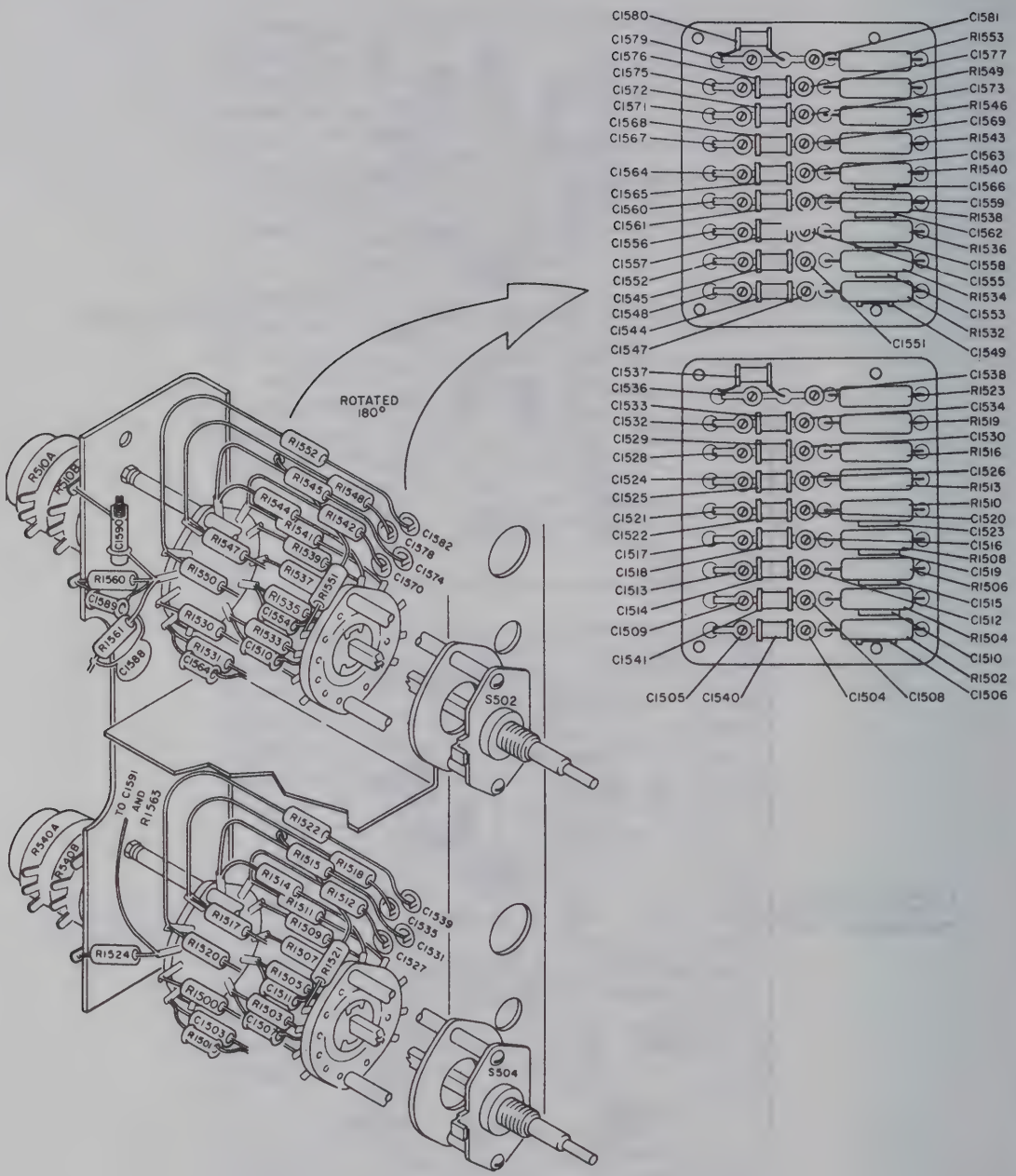

Figure 5-33. MX-2930B/USM Vernier/Sensitivity Switch Assembly, Location of Parts

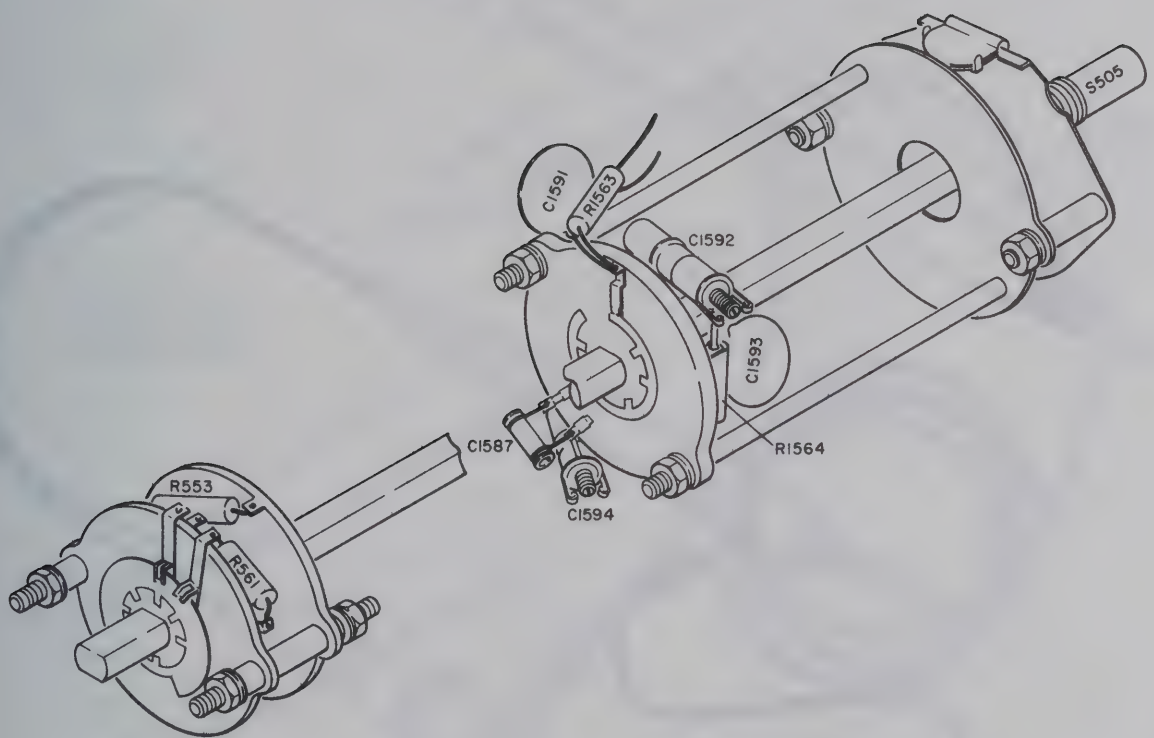

Figure 5-34. MX-2930B/USM Vertical Presentation Switch Assembly, Location of Parts

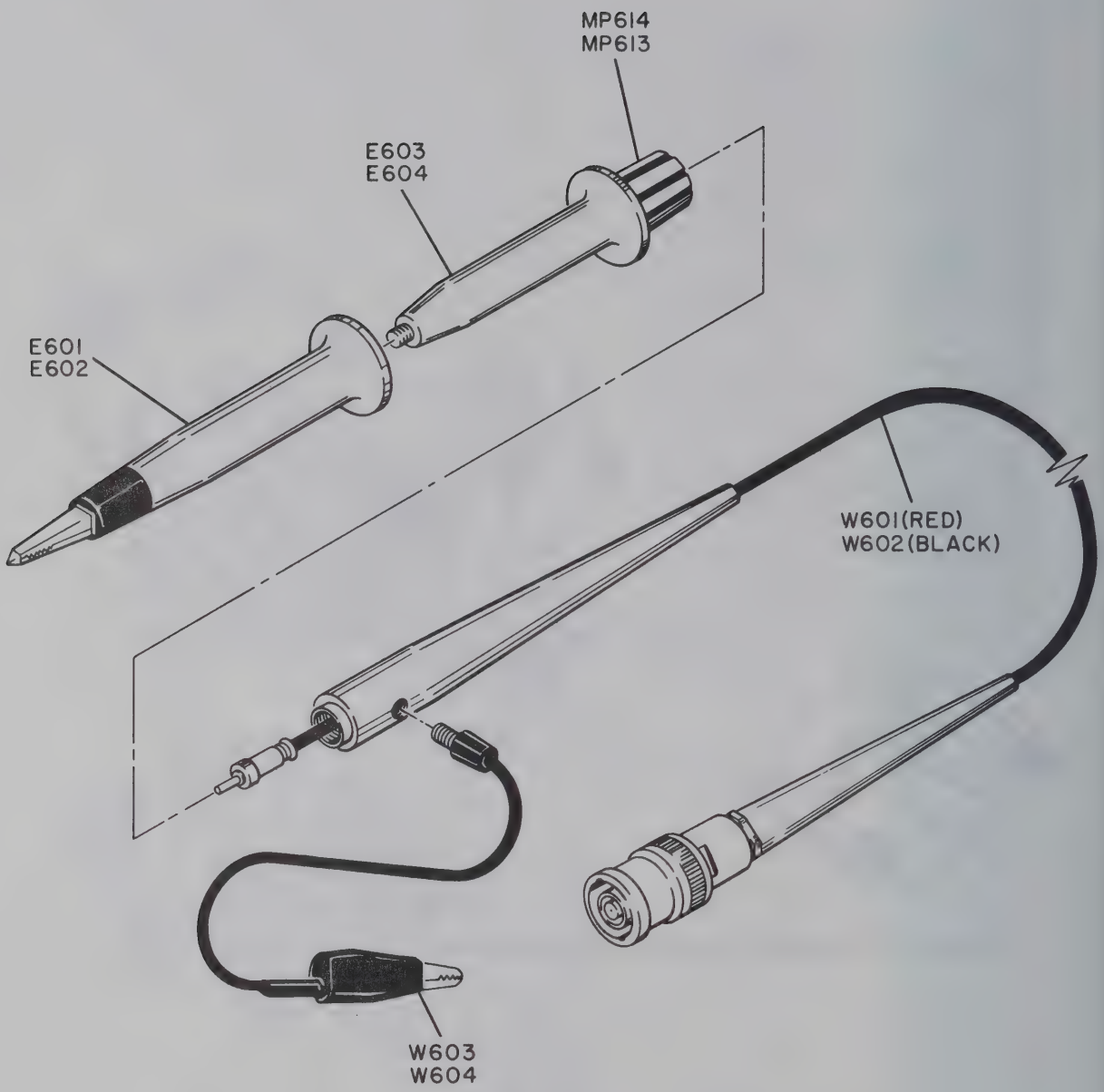

Figure 5-35. MX-2817/U Test Prod, Location of Replaceable Parts.

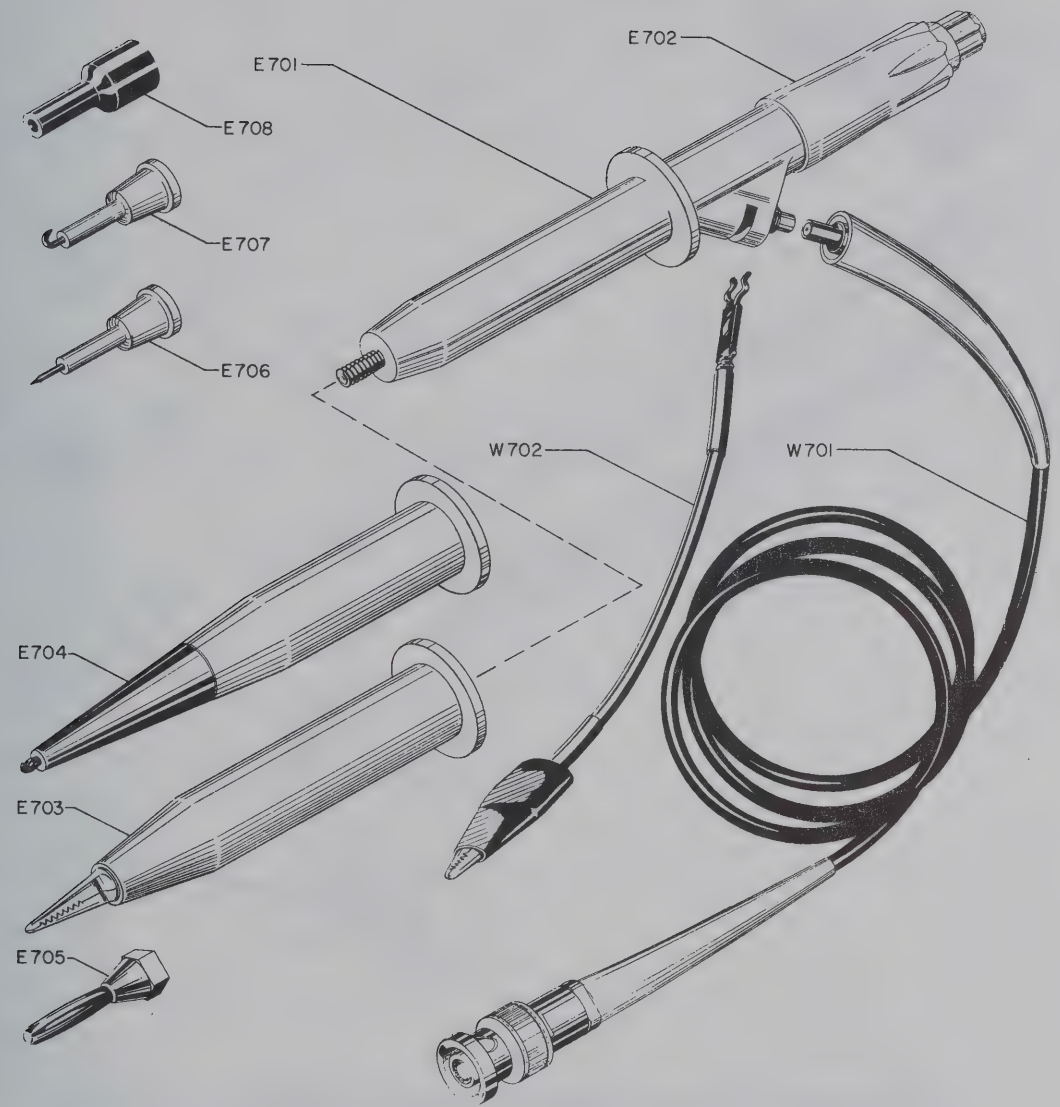

Figure 5-35A. MX-4073A/U Test Prod, Location of Replaceable Parts

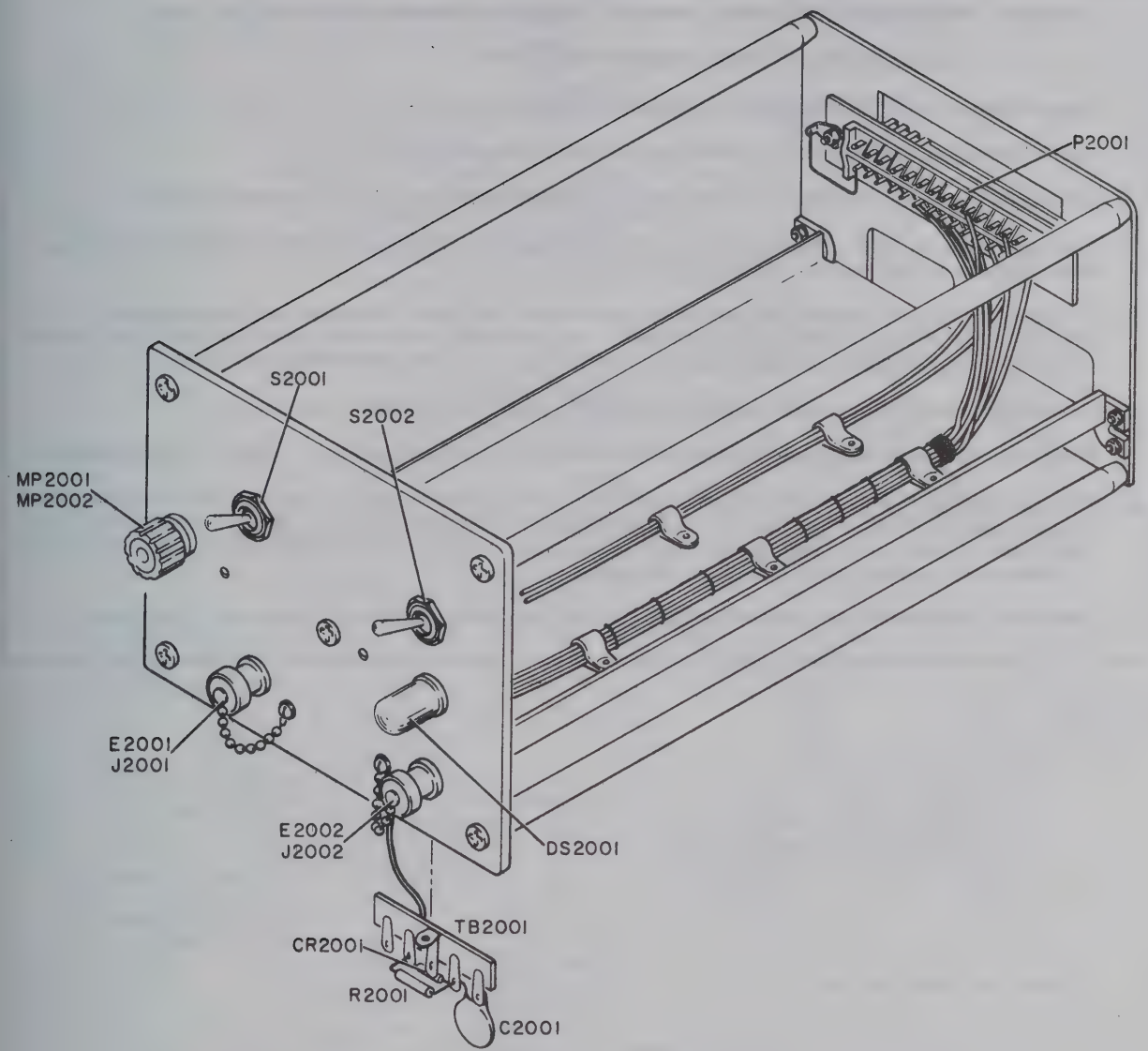

Figure 5-36. MX-3078/USM Horizontal Auxiliary Plug-In Unit, Location of Parts

TABLE 5-11. GENERAL SCHEMATIC DIAGRAM NOTES

1. Component values expressed in ohms, microhenries, and picofarads unless otherwise noted.
2. —— - - —— indicates etched circuit assembly boundaries.
3. Names of panel controls and connectors are enclosed in boxes.
4. Primary signal paths weighted. Feedback paths weighted and dashed.
5. DC voltages are preceded by "+" or "-". AC signal and ripple voltages are followed by VP-P.
6. The letters CW or CCW, placed adjacent to the appropriate terminals of a potentiometer, indicate the direction of rotation viewed from the shaft end.
7. AC signal and ripple voltages are measured with another AN/USM-140B Oscilloscope using the AM-3567/USM High Gain Differential Amplifier. An equivalent oscilloscope may be used. 400 cps sine waves are used for signal voltage measurements except where other waveforms are shown.
8. DC voltages are measured with the AN/USM-116 Voltmeter unless otherwise noted.
9. Special conditions or switch settings required for voltage measurements are noted on the schematics.
10. Because resistance measurements in circuits having many semiconductor elements can be misleading (see paragraph 5-5b)because they vary with the method of measurement, no tables of resistance values are given. Instead, a multiplicity of voltage test points is indicated, and additional voltages are provided in tables on the schematic aprons where necessary.
11. Parts location on each large schematic is given in a table of map-type coordinates on the schematic apron.

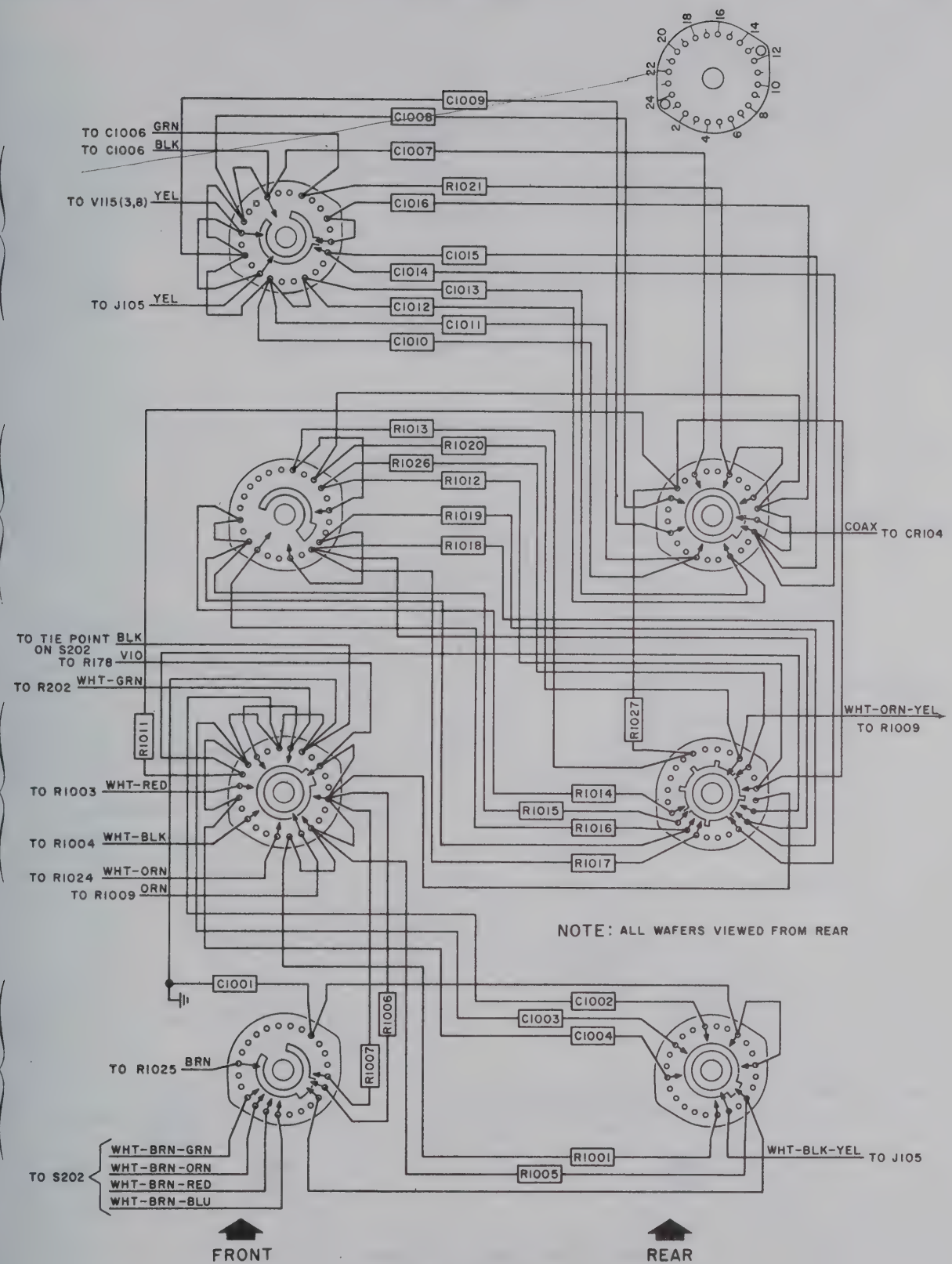

Figure 5-40. Sweep-Time Switch, Wiring Diagram

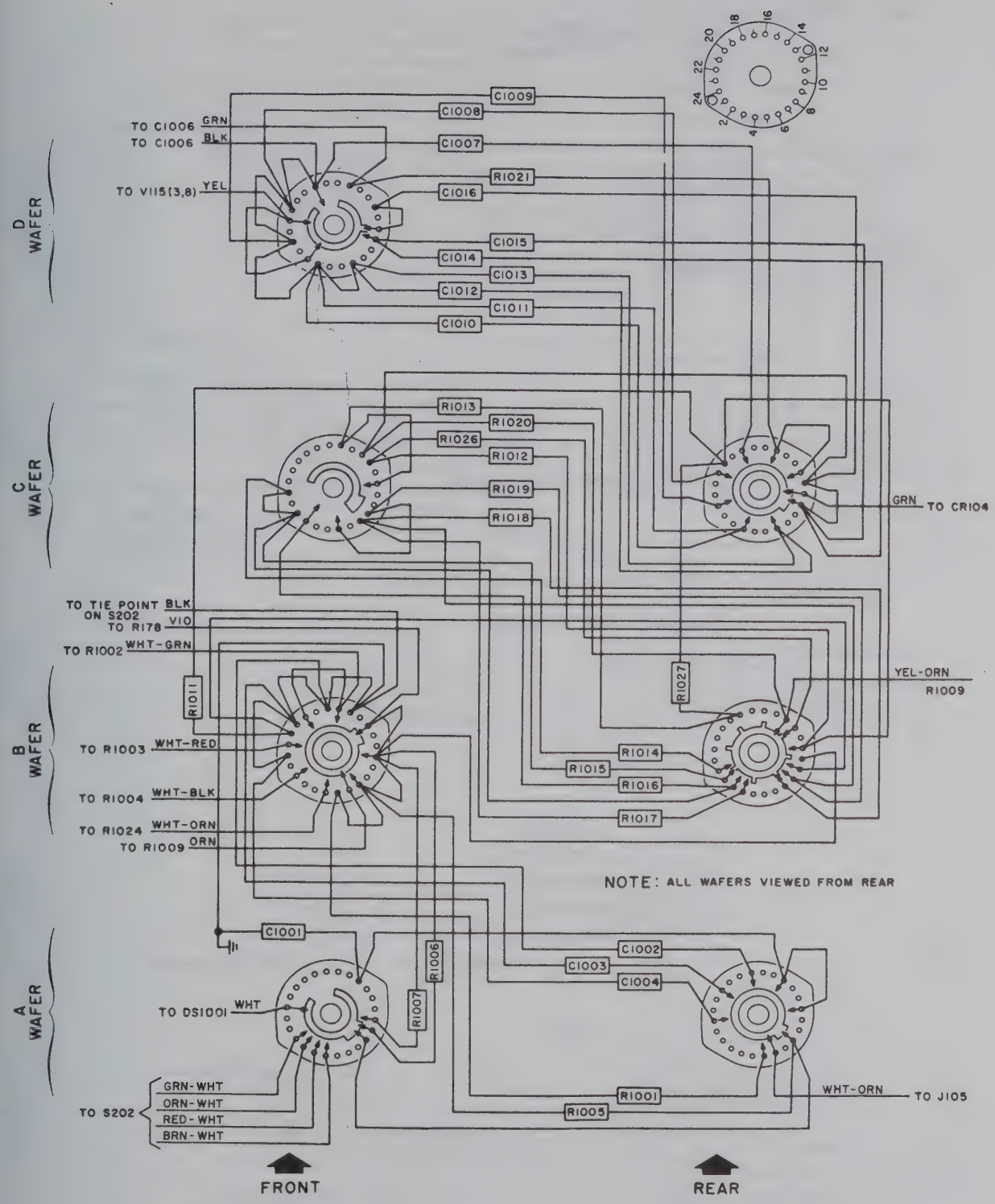

Figure 5-40A. Sweep-Time Switch, Wiring Diagram
AN-USM-140C

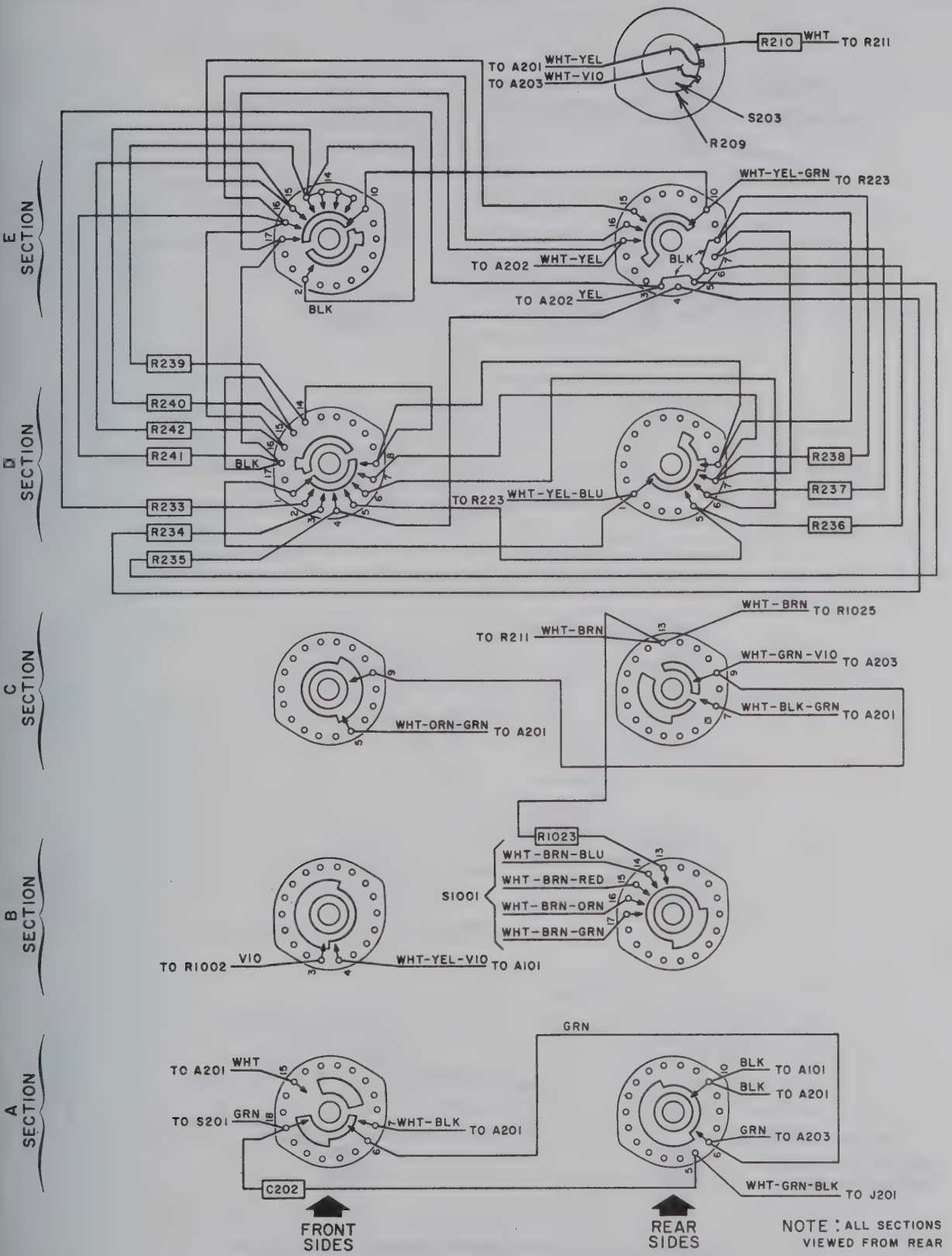

Figure 5-42. Horizontal Display Switch Schematic Diagram

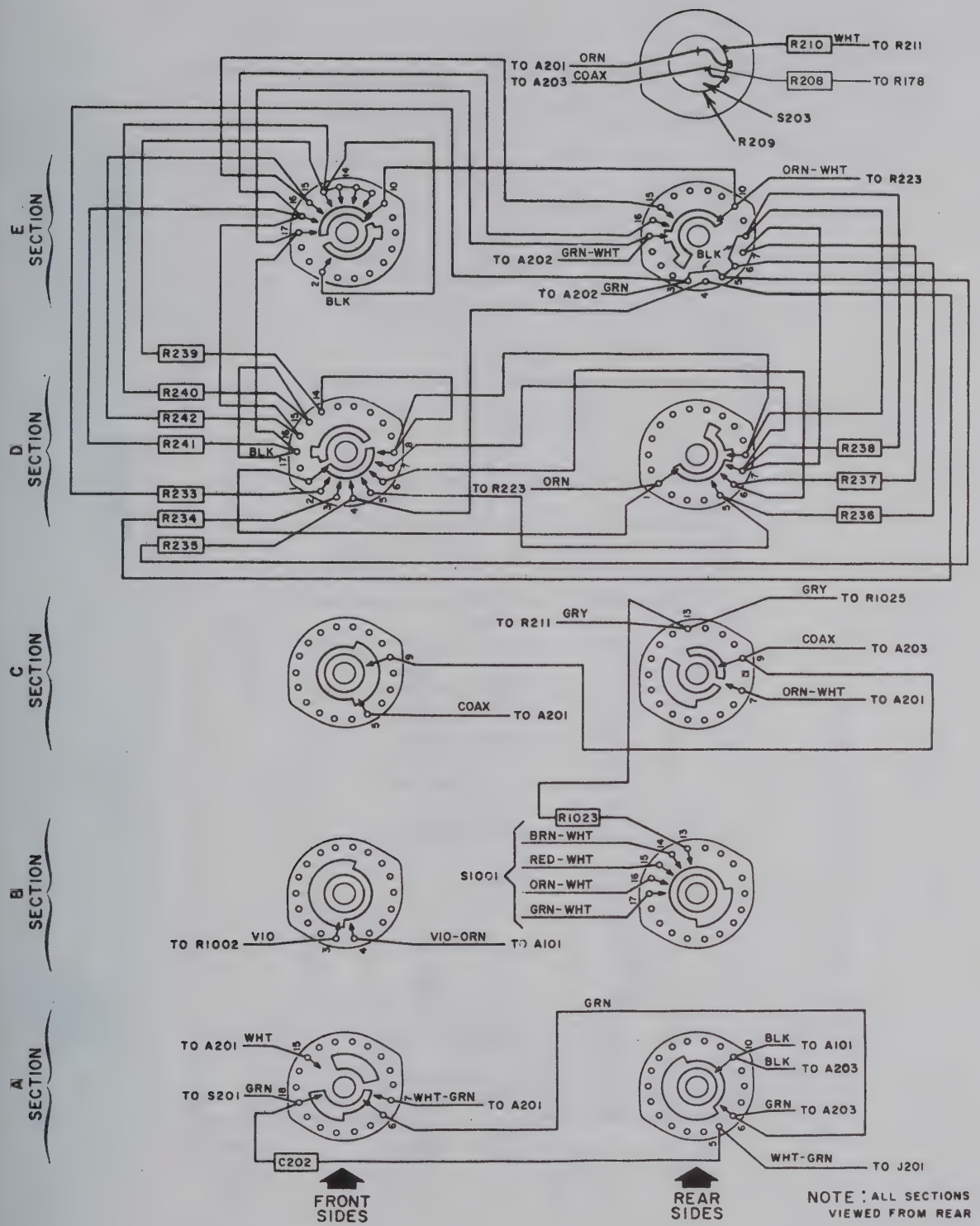

Figure 5-42A. Horizontal Display Switch Schematic Diagram AN/USM-140C

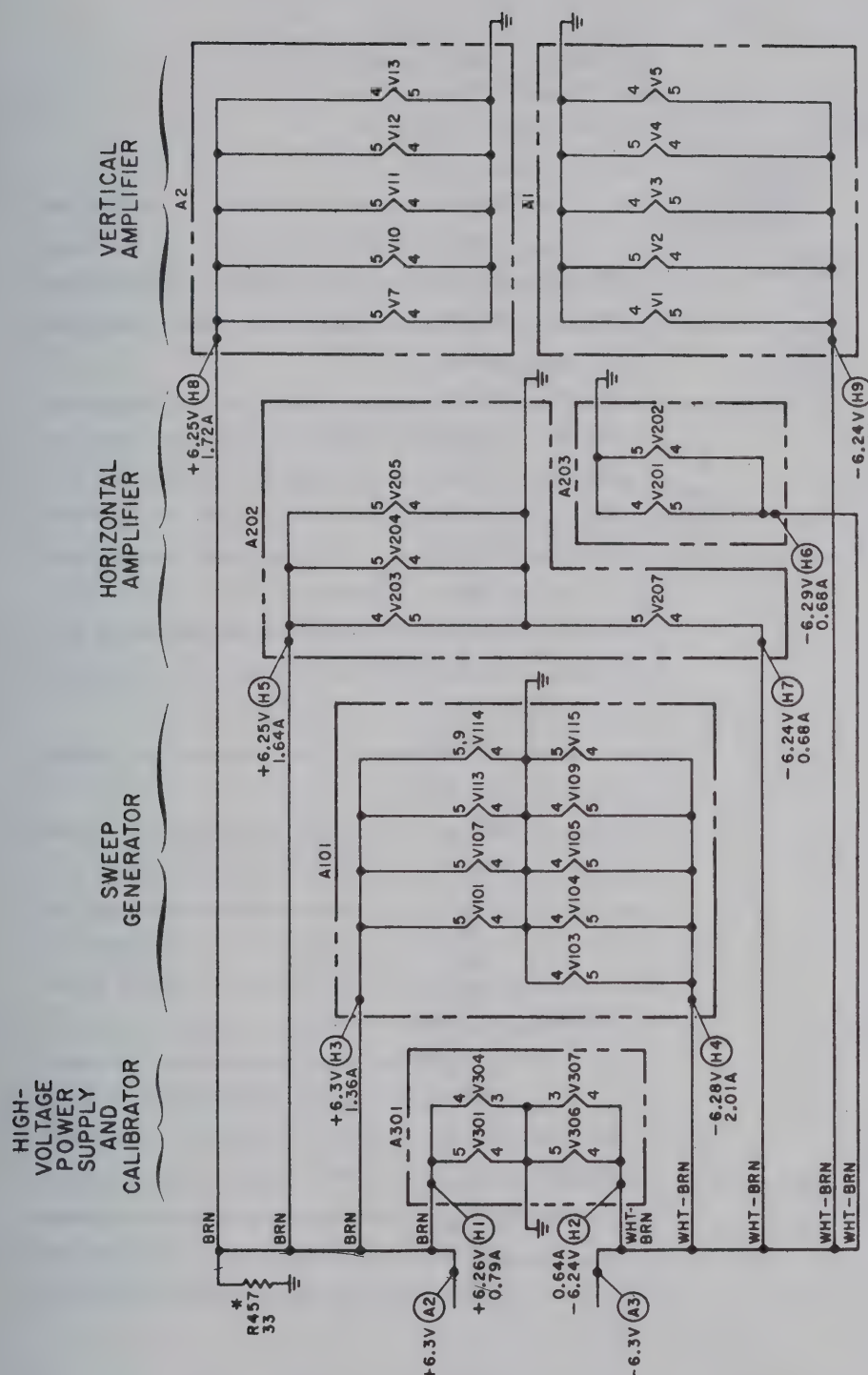

NOTE:
* = LOCATED ON TERMINAL STRIP ON CENTER GUSSET.

Figure 5-45. Electron Tube Heater Circuit, Functional Diagram

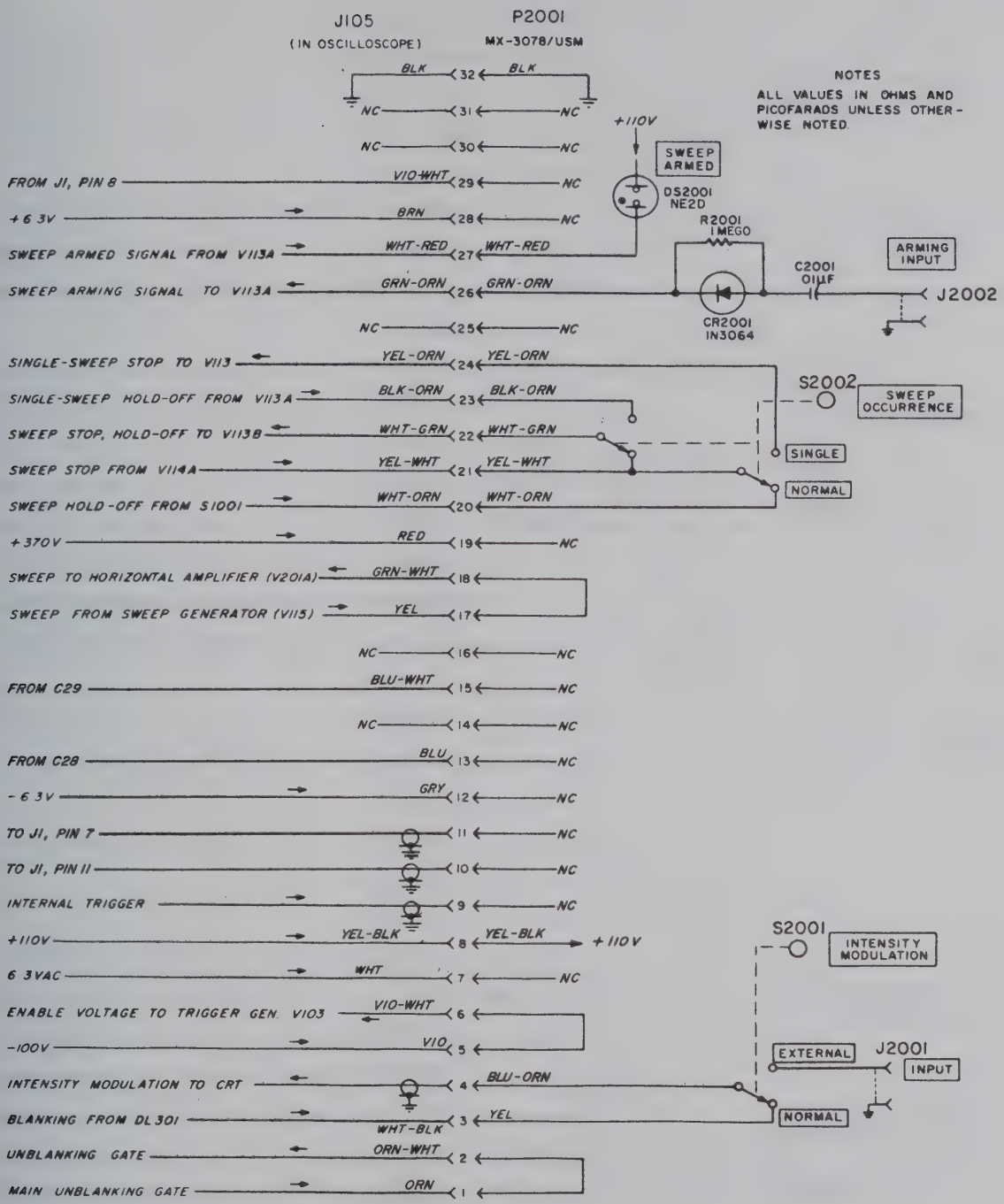

Figure 5-47A. MX-3078/USM Horizontal Channel Auxiliary Plug-In Unit Schematic Diagram

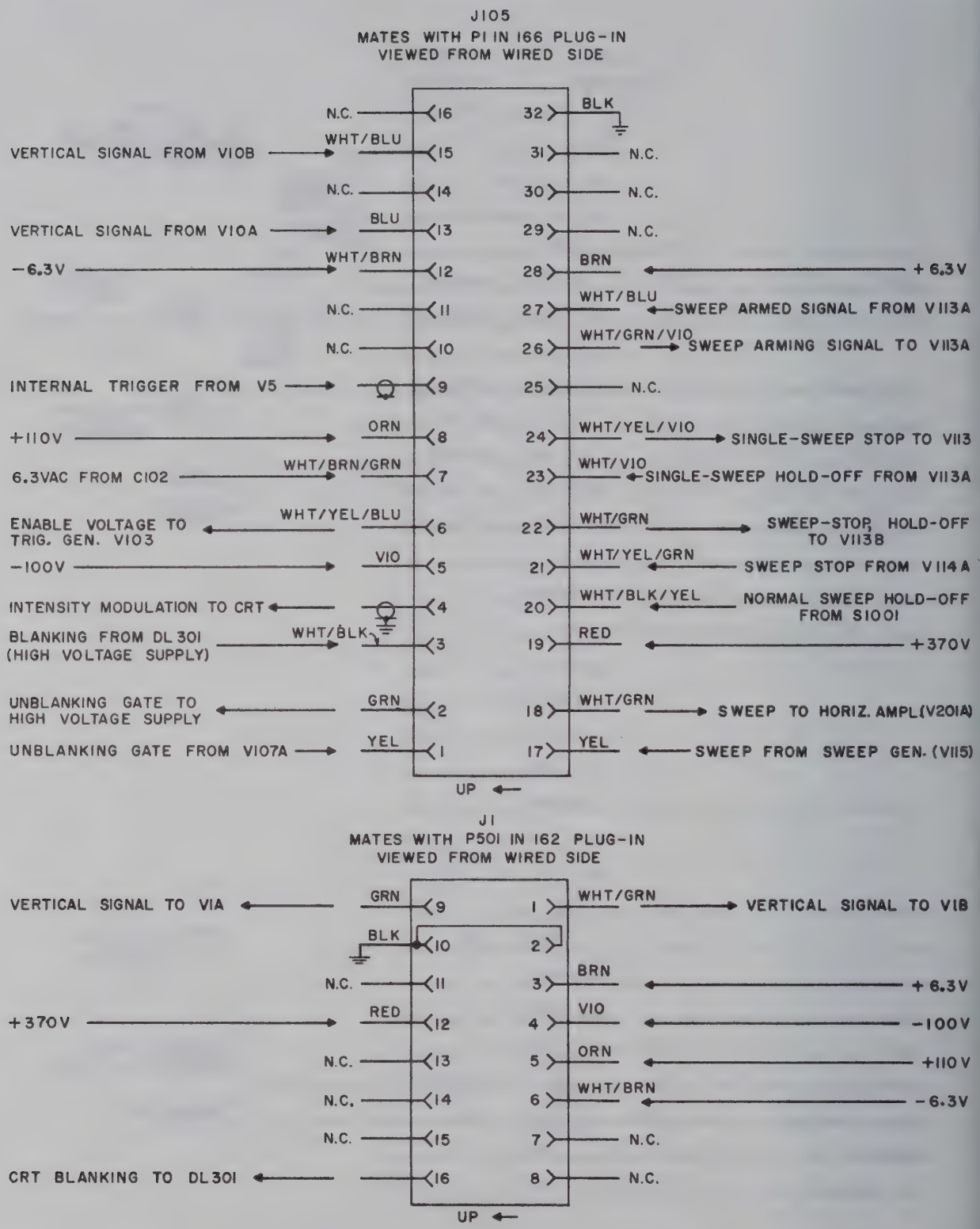

Figure 5-48. Connections to the Horizontal and Vertical Plug-In Connectors J105 and J1

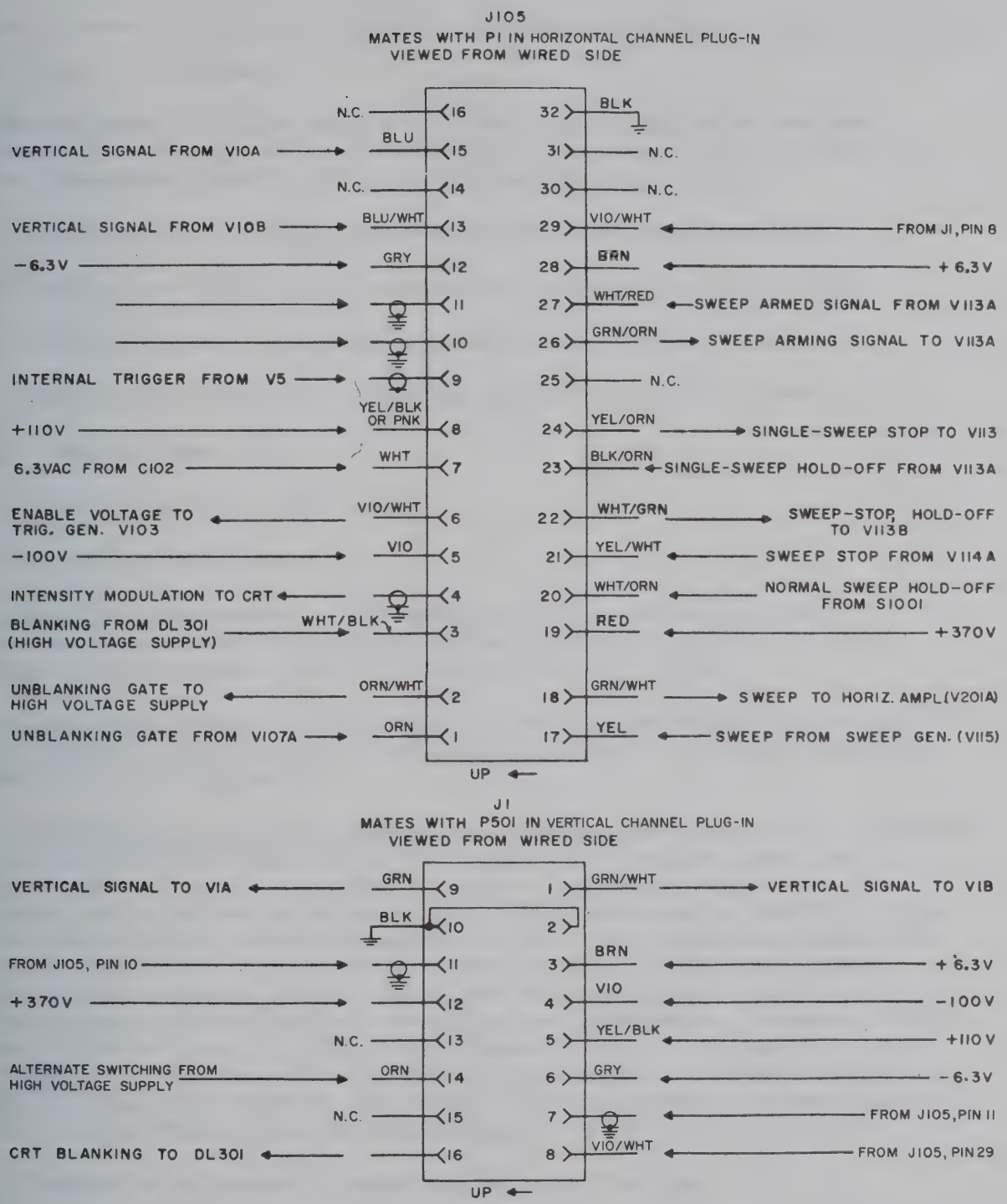

Figure 5-48A. Connections to the Horizontal and Vertical Plug-In Connectors J105 and J1 AN/USM-140C

SECTION 6

PREVENTIVE MAINTENANCE CHECKS AND SERVICES

6-1. Scope of Maintenance

The maintenance duties assigned to the operator and organizational repairman of the equipment are listed below, together with a reference to the paragraphs covering the specific maintenance functions.

a. Daily preventive maintenance checks and services (para 6-4).

b. Weekly preventive maintenance checks and services (para 6-5).

c. Monthly preventive maintenance checks and services (para 6-6).

d. Quarterly preventive maintenance checks and services (para 6-7).

e. Cleaning (para 6-8).

f. Touchup painting (para 6-9).

6-2. Preventive Maintenance

Preventive maintenance is the systematic care, servicing, and inspection of equipment to prevent the occurrence of trouble, to reduce downtime, and to assure that the equipment is serviceable.

a. Systematic Care. The procedures given in paragraphs 6-4 through 6-8 cover routine systematic care and cleaning essential to proper upkeep and operation of the equipment.

b. Preventive Maintenance Checks and Services. The preventive maintenance checks and services charts (para 6-4 through 6-7) outline functions to be performed at specific intervals. These checks and services are to maintain Army electronics equipment in a combat-serviceable condition; that is, in good general (physical) condition and in good operating condition. To assist operators in maintaining combat serviceability, the charts indicate what to check, how to check, and what the normal conditions are; the References column lists the illustrations, paragraphs, or manuals that contain detailed repair or replacement procedures. If the defect cannot be remedied by the corrective actions listed, higher level maintenance or repair is required. Records and reports of these checks and services must be made in accordance with the requirements set forth in TM 38-750.

6-3. Preventive Maintenance checks and Services Periods

Preventive maintenance checks and services of the equipment are required daily, weekly, monthly, and quarterly.

a. Paragraph 6-4 specifies the checks and services that must be accomplished daily (or at least once each week if the equipment is maintained in standby condition).

b. Paragraphs 6-5, 6-6, and 6-7 specify additional checks and services that must be performed weekly, monthly, and quarterly.

6-4. Daily Preventive Maintenance Checks and Services Chart

Sequence No.	Item to be inspected	Procedure	References
1	Completeness	See that the equipment is complete	Appx.
2	Exterior surfaces	Clean the exterior surfaces, including the panel and the crt glass (para 6-8). Check the indicator lens for cracks.	Para 6-8.
3	Connectors	Check the tightness of all connectors	None.
4	Controls and indicators.	While making the operating checks (sequence No. 5), observe that the mechanical action of each knob, dial, and switch is smooth and free of external or internal binding, and that there is no excessive looseness.	None.
5	Operation	Operate the equipment according to section 3. During operation, be alert for any unusual performance or condition.	None.

6-5. Weekly Preventive Maintenance Checks and Services Chart

Sequence No.	Item to be inspected	Procedure	References
1	Cables	Inspect cords, cables, and wires for chafed, cracked, or frayed insulation. Replace connectors that are broken, arced, stripped, or worn excessively.	None.
2	Handles and latches ...	Inspect handles and latches for looseness, Replace or tighten as necessary.	None.
3	Metal surfaces	Inspect exposed metal surfaces for rust and corrosion. Clean and touchup paint as required (para 6-9).	None.

6-6. Monthly Preventive Maintenance Checks and Services Chart

Sequence No.	Item to be inspected	Procedure	References
1	Pluckout items	Inspect seating of pluckout items. Make certain that tube clamps grip tubes tightly.	None.
2	Jacks	Inspect jacks for snug fit and good contact	None.
3	Transformer terminals.	Inspect terminals on power transformer and high-voltage transformer for dirt or corrosion. All nuts securing the transformer must be tight.	None.

6-6. Monthly Preventive Maintenance Checks and Services Chart (cont)

Sequence No.	Item to be inspected	Procedure	References
4	Terminal blocks	Inspect terminal blocks for loose connections and cracked or broken insulation.	None.
5	Resistors and capacitors.	Inspect resistors and capacitors for cracks, blistering, or other defects.	None.
6	Variable capacitors	Inspect variable capacitors for dirt, corrosion, and deformed plates.	None.
7	Air filter	Clean and inspect the air filter	Para 5-2a.

6-7. Quarterly Preventive Maintenance Checks and Services Chart

Sequence No.	Item to be inspected	Procedure	References
1	Publications	See that all publications are complete, serviceable, and current.	DA Pam 310-4.
2	Modifications	Check DA Pam 310-4 to determine whether new applicable MWO's have been published. All URGENT MWO's must be applied immediately. All NORMAL MWO's must be scheduled.	TM 38-750 and DA Pam 310-4.

6-7. Quarterly Preventive Maintenance Checks and Services Chart (cont)

Sequence No.	Item to be inspected	Procedure	References
3	Spare parts	Check all spare parts (operator and organizational) for general condition and method of storage. No overstock should be evident, and all shortages must be on valid requisitions.	Appx.
4	Lubrication of fan motor.	Check and lubricate the fan motor	Para 5-2b.

6-8. Cleaning

Inspect the exterior surfaces of Oscilloscope AN/USM-140B. The exterior surfaces must be free of dust, grease, and fungus.

a. Remove dust and loose dirt with a clean, soft cloth.

Warning: Cleaning compound is flammable and its fumes are toxic. Provide adequate ventilation. DO NOT use near a flame. Avoid contact with the skin; wash off any that spills on your hands.

b. Remove grease, fungus, and ground-in dirt from the case and covers of the oscilloscope; use a cloth dampened (not wet) with Cleaning Compound (FSN 7930-395-9542).

c. Remove dust or dirt from plugs and jacks with a brush.

d. Clean the front panel and control knobs; use a soft, clean cloth. If dirt is difficult to remove, dampen the cloth with water; use mild soap if necessary.

6-9. Touchup Painting Instructions

Remove rust and corrosion from metal surfaces by lightly sanding them with fine sandpaper. Brush two thin coats of paint on bare metal to protect it from further corrosion. Refer to the applicable cleaning and refinishing practices specified in TB SIG 364.

SECTION 7

DEPOT OVERHAUL STANDARDS

7–1. Applicability of Depot Overhaul Standards

Tests outlined in paragraphs 7–6 through 7–12 are designed to measure the performance capability of a repaired equipment. Equipment that is to be returned to stock should meet standards given in these tests.

7–2. Applicable References

a. Repair Standards. Applicable procedures of the depots performing these tests, and the general standards for repaired electronic equipment given in TB SIG 355–1, TB SIG 355–2, and TB SIG 355–3 form a part of requirements for testing this equipment.

b. Modification Work Orders. Perform all modification work orders applicable to this equipment *before* making test specified. DA Pam 310–7 lists all available MWO's.

7–3. Test Facilities Required

The test equipments listed below are required for depot testing:

Nomenclature	Technical manual	Common name
Voltmeter, Electronic ME–2020A/U.	TM 11–6625–537–15–1	Ac differential voltmeter
Voltmeter, Meter ME–30(*)/U.[a]	TM 11–6625–320–12	Voltmeter, electronic.
Generator, Square Wave Tektronic Model 107.	----------	Square wave generator.
Generator, Electronic Marker AN/USM–108.	TM 11–6625–542–15	Marker generator.
Constant Amplitude Generator Tektronix Model 190A.	----------	Constant amplitude generator.
Voltmeter, Calibrator, Hewlett-Packard Model 738A.	----------	Voltmeter-calibrator.
Attenuator, Tektronix Model 190A.	----------	Attenuator.
Feed-Through Termination Tektronix, 52 ohm.	----------	Termination.
Main vertical amplifier test connector (fabricated according to para 7–4).	----------	Vertical amplifier test connector.

[a]Refers to Voltmeter, Meter ME–30A/U and Voltmeters, Electronic ME–30B/U, ME–30C/U, and ME–30E/U.

7–4. Fabrication of Main Vertical Amplifier Test Connector

Fabricate the main vertical amplifier test connector in accordance with figure 7–1.

7–5. General Test Requirements

All tests should be conducted under the conditions given below.

a. All test equipment should be connected

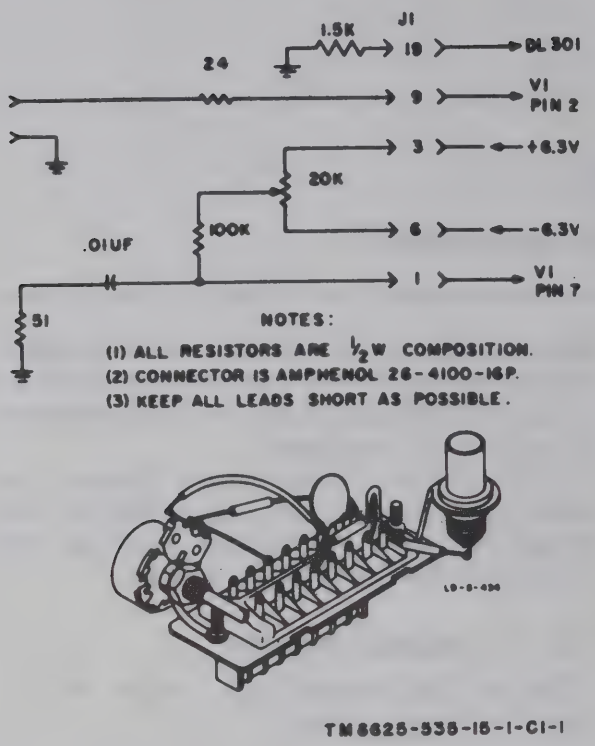

Figure 7–1. Main vertical amplifier test connector.

to 115 volts ac ±10%, 50 through 60 cps ±10% or 400 cps ±10%.

b. All tests should be conducted at room temperature.

c. The test equipment should have a warm-up time of 5 minutes or more before tests are performed.

7–6. Mechanical Test Requirements

All switches should have positive action; all controls should operate smoothly without binding. Proper operation should be inspected as follows:

a. Turn the INTENSITY control fully clockwise.

b. Connect the oscilloscope to the power source; place the POWER switch to ON and wait for the initial warmup. The pilot lamp should light.

c. Place the HORIZONTAL DISPLAY switch at X1, and the VERNIER control at CAL.

d. Set the SWEEP TIME switch to .5 MILLISECONDS/CM, and the VERNIER control to CAL.

e. Place the SWEEP MODE control at PRESET, and the TRIGGER SOURCE switch at INT.

f. Set the INTENSITY MODULATION and SWEEP OCCURRENCE switches to NORMAL.

g. Connect the test prod BNC terminal to the CHANNEL A INPUT connector.

h. Place the vertical presentation switch at the CHANNEL A position.

i. Set the CHANNEL A SENSITIVITY switch to .05 VOLTS/CM.

j. Place the CALIBRATOR switch at 2.

k. Connect the test prod tip to the CALIBRATOR VOLTS connector.

l. Rotate the INTENSITY control clockwise until a trace appears. If the crt remains blank, press the BEAM FINDER pushbutton.

m. Adjust the HORIZONTAL POSITION and CHANNEL A VERTICAL POSITION controls until the trace is centered on the screen. If necessary, readjust the INTENSITY control.

n. Adjust the FOCUS and ASTIGMATISM controls to obtain a thin trace.

o. Loosen the knurled locknut behind the rear flange on the prod.

p. Hold the vinyl sheath behind the locknut and rotate the rear flange to obtain the best square wave. Check to see that the vertical deflection is 4 centimeters (corresponding to .05 volt/centimeter (cm) sensitivity with a 2-volt calibrator output and 10:1 attenuation in the probe).

q. Tighten the prod locknut without changing the adjustment.

r. Turn the vertical presentation switch to CHANNEL B. Repeat the procedures given in *i* through *c* above for CHANNEL B and the other test prod.

s. Repeat the procedures (*a* through *r* above) with the vertical presentation switch set to ALTERNATE and with both prods connected to the calibrator (one driving CHANNEL A and one driving CHANNEL B) to test both channels simultaneously.

t. To display a single signal, connect either probe to the signal and switch the vertical presentation switch to the corresponding channel. Adjust the SENSITIVITY, HORIZONTAL DISPLAY, and SWEEP TIME switches and the TRIGGER controls as necessary to obtain and synchronize the desired display.

7–7. Power Supply Test

Perform the power supply test as follows:

a. Remove the oscilloscope from the cabinet and ground the chassis. Turn the instrument on and allow a few minutes warmup time. Ground the ME–202A/U to the chassis and measure the voltages at the test points shown in figure 7–2. Readings should be as shown in the chart below.

Test point	Voltage reading
A1	+6.3 volts ±1.
A2	–6.3 volts ±1.
A3	–100 volts ±0.4.
A4	+110 volts ±0.44.
A5	+370 volts ±3.7.

b. Disconnect the ME–202A/U from the chassis and connect the ground connection of the ME–30(*)/U to the oscilloscope chassis. Measure the ripple voltages at the test points shown in figure 7–2. Readings should be as shown in the chart below.

Test point	Voltage reading
A1	7mvac.
A2	7mvac.
A3	3mvac.
A4	7mvac.
A5	18mvac.

Note. These voltages are greater than typical voltages listed on the schematic diagram and are the maximum allowable.

7–8. Calibrator Test

Perform the calibrator test as described in *a* through *d* below:

a. Set controls of the oscilloscope as follows:
(1) HORIZONTAL DISPLAY: X1.
(2) TRIGGER SOURCE: INT.
(3) SWEEP MODE: PRESET.
(4) SWEEP TIME: 2 MILLISECONDS/CM.
(5) VERTICAL SENSITIVITY: 2 VOLTS/CM.
(6) CALIBRATOR: OFF.

b. Adjust the voltmeter-calibrator to deliver 10 volts at 400 cycles peak-to-peak and connect this signal to the VERTICAL INPUT jack. Set the sensitivity vernier for exactly 4-cm deflection, and disconnect the voltmeter calibrator. Set the CALIBRATOR switch to a 10-volt output and connect the calibrator output at the VOLTS connector to the vertical INPUT connector. Note the exact amplitude of the square wave.

c. The amplitude of the sine-wave output from the voltmeter-calibrator and the square-wave output from the oscilloscope should not differ by more than 3 %.

d. Check all of the CALIBRATOR voltage ranges by comparing equal voltages from the voltmeter-calibrator and the CALIBRATOR output. Use the procedures given in *b* and *c* above.

7–9. Horizontal Amplifier Test

Perform the horizontal amplifier test as follows:

a. Connect the equipment as shown in figure 7–3.

b. Set the voltmeter-calibrator to deliver 1 volt peak-to-peak. Adjust the position controls to center the horizontal trace.

c. Set the HORIZONTAL DISPLAY switch to .1 VOLTS/CM, the trace should extend 10 ±0.3 cm.

d. Set the HORIZONTAL DISPLAY switch to .2 VOLTS/CM, the trace should extend 5 ±0.15 cm.

e. For each setting of the HORIZONTAL DISPLAY switch, set the voltmeter-calibrator to deliver 10 times the voltage indicated; the trace should be 10 ±0.3 cm long. At each position of the voltmeter-calibrator, move the HORIZONTAL DISPLAY switch to the next higher position before increasing the voltmeter-calibrator output; the trace should then be 5 ±0.15 cm long.

f. Connect the equipment as shown in figure 7–4. Set the HORIZONTAL DISPLAY switch to .1 VOLTS/CM. Set up the constant amplitude signal generator to deliver a 50-kilocycle

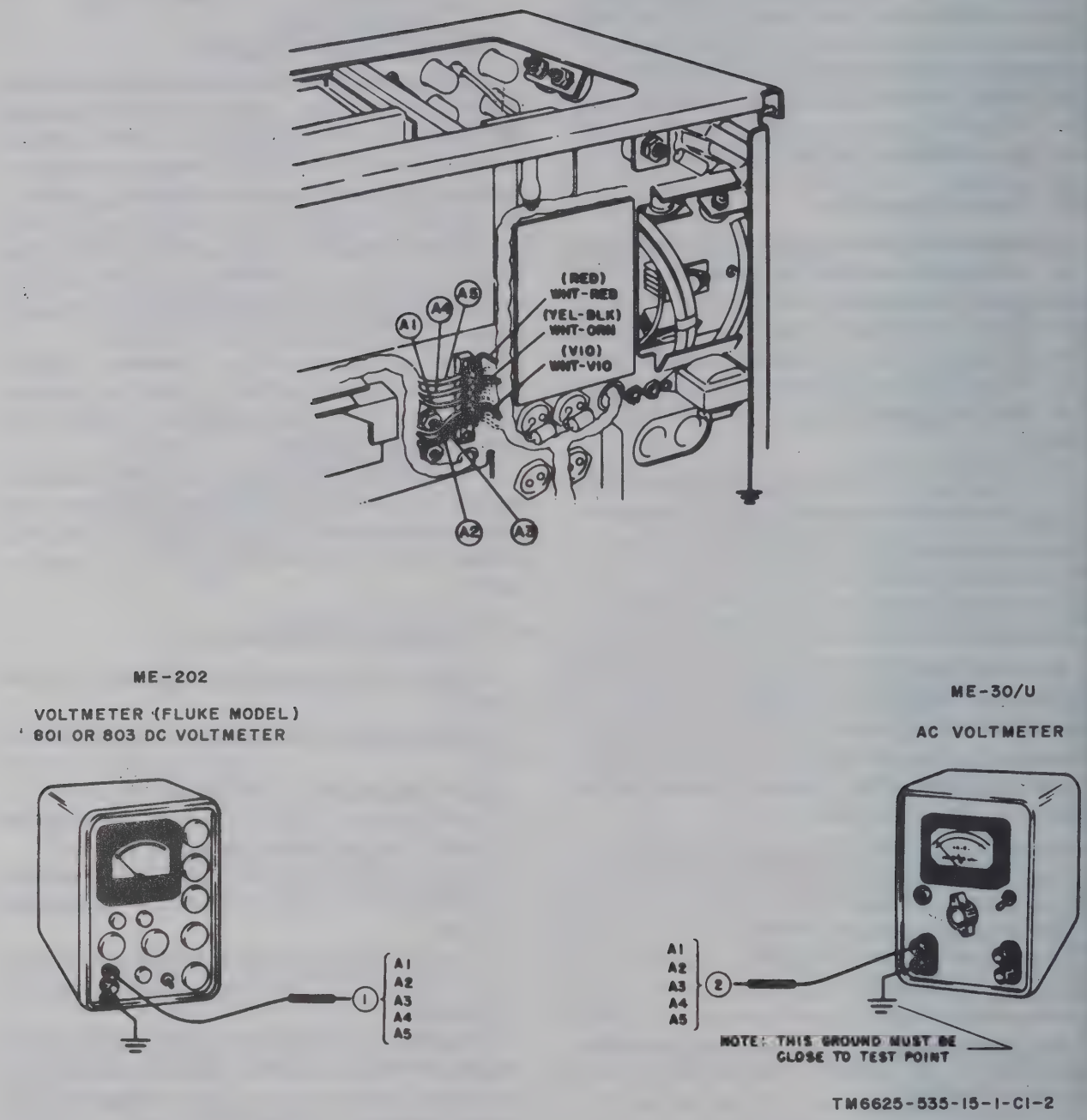

Figure 7–2. Power supply voltage and ripple test connections.

(kc) output. Adjust the amplitude for a 10-cm horizontal deflection on the crt. Increase the frequency of the constant amplitude generator and note the deflection on the crt. The frequency at which the deflection on the crt decreases to 7.1 cm (3-decibel (db) point) should be greater than 1 megacycle (mc).

7–10. Sweep Generator Test

To perform the sweep generator test, connect the equipment as shown in figure 7–5 and proceed as follows:

a. Connect the equipment as shown in A, figure 7–5. Set the marker generator to deliver 1-microsecond (μsec) markers.

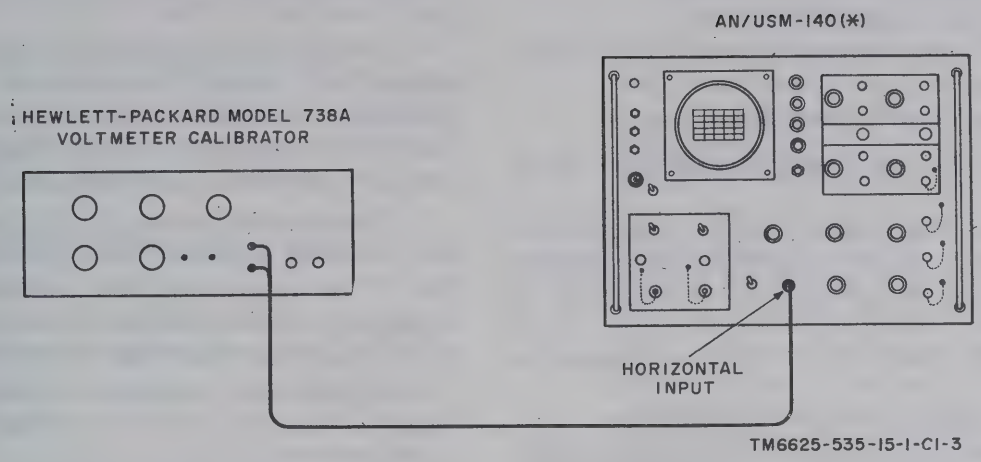

Figure 7–3. Horizontal attenuator test.

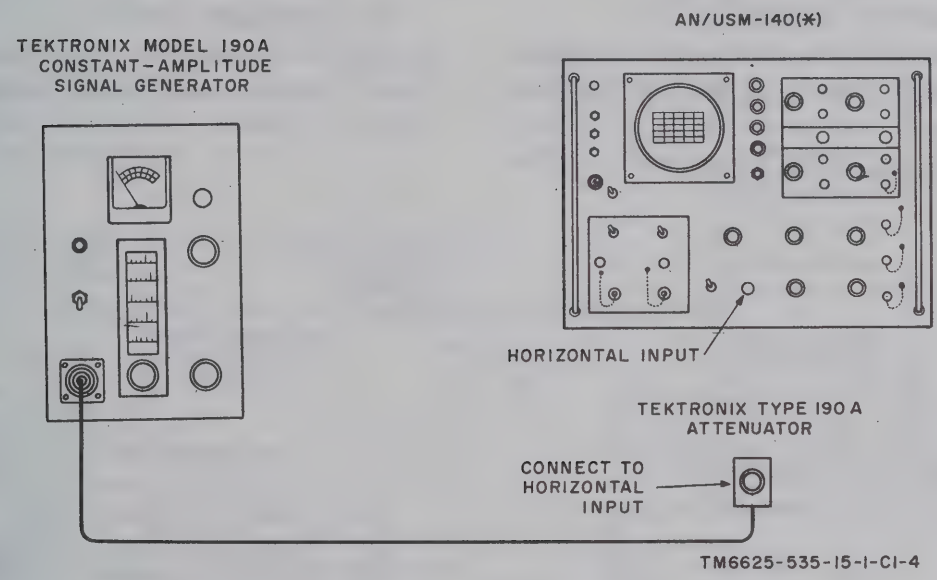

Figure 7–4. Horizontal amplifier frequency response test.

b. Set the controls of the oscilloscope as follows:

(1) HORIZONTAL DISPLAY: X1.
(2) TRIGGER SOURCE: INT.
(3) SWEEP MODE: TRIGGER.
(4) SWEEP TIME: 1 MICROSECOND/CM.

c. Adjust the VERTICAL SENSITIVITY for a 1-cm deflection. The markers should appear every cm ±3%.

d. Set the SWEEP TIME switch to 1 MILLISECOND/CM, and the marker generator to deliver 1-millisecond markers. The markers should appear every cm ±3%.

e. Set the SWEEP TIME switch to 1 SECOND/CM, and the marker generator to deliver 1-second markers. The markers should appear every cm ±3%.

f. Connect the equipment as shown in B, figure 7–5. Set the voltmeter-calibrator to deliver a 0.2-volt, peak-to-peak signal. Set the controls of the oscilloscope as follows:

(1) VERTICAL SENSITIVITY: 1 VOLT/CM. Set the VERTICAL SENSITIVITY vernier to CALIBRATED.
(2) SWEEP TIME: 1 MILLISECOND/CM.

(3) SWEEP MODE: PRESET.
(4) TRIGGER LEVEL: 0.

g. The sweep is triggered and without jitter.

7-11. Main Vertical Amplifier Test

Perform the main vertical amplifier test as follows:

a. Remove the vertical plug-in unit and insert the main vertical amplifier test connector, fabricated in paragraph 7-4, as shown in A, figure 7-6.

b. Set the controls of the oscilloscope as follows:

(1) HORIZONTAL DISPLAY: X1.
(2) SWEEP TIME: 2 MILLISECONDS/CM.
(3) TRIGGER SOURCE: INT.
(4) SWEEP MODE: PRESET.
(5) TRIGGER LEVEL: 0.

c. Adjust the voltmeter-calibrator to deliver 400 cps, 0.8 volt peak-to-peak. The peak-to-peak deflection on the crt should be 4 ±0.2 cm.

d. Connect the equipment as shown in B, figure 7-6. Adjust the constant amplitude generator for a 50-kc output. Adjust the amplitude of the constant amplitude signal generator output to achieve a 4-cm deflection on the crt.

e. Increase the frequency of the constant amplitude signal generator until the deflection on the crt decreases to 2.8 cm (3-db point). The frequency at this point should be a minimum of 30 mc, and is typically above 35 mc.

f. Connect the equipment as shown in C, figure 7-6. Set the controls of the oscilloscope as follows:

(1) HORIZONTAL DISPLAY: X5.
(2) SWEEP TIME: .1 MICROSECOND/CM.
(3) TRIGGER LEVEL: +.

g. Set the square wave generator to deliver a 1-mc, 0.5-volt square wave. Center the lead-

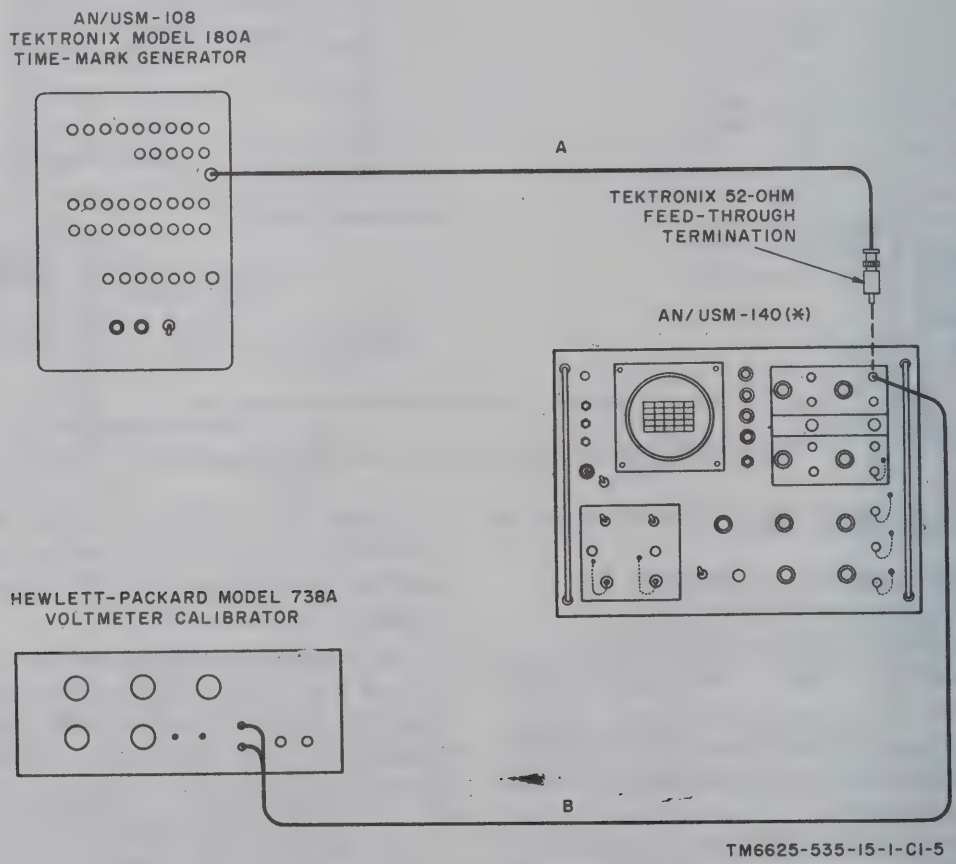

Figure 7-5. Sweep generator test setup.

ing edge of the square wave with the control on the main vertical amplifier test connector and the HORIZONTAL POSITION control. Adjust the TRIGGER LEVEL control to shift the leading edge of the square wave as far to the right as possible. The risetime (10 through 90%) should be 11 (μsec) (0.55 cm), or less.

7–12. MX–2930B/USM Vertical Plug-In Test

a. Channel A Vertical Sensitivity. Check the channel A vertical sensitivity as follows:

(1) Set the controls of the oscilloscope as follows:
- (*a*) CHANNEL A + B VERNIER: CAL.
- (*b*) AC–DC SWITCH: AC.
- (*c*) Vertical presentation switch: CHANNEL A.
- (*d*) SWEEP MODE: PRESET.
- (*e*) SWEEP TIME: 5 MILLISECONDS/CM.
- (*f*) SENSITIVITY control vernier: CALIBRATED.
- (*g*) TRIGGER SOURCE: INT.

(2) Connect the equipment as shown in A, figure 7–7. Adjust the voltmeter-calibrator to deliver 400 cycles at a 0.1-volt, peak-to-peak output. Set the SENSITIVITY switch of the oscilloscope to .02 VOLTS/CM. The vertical deflection on the oscilloscope crt should be 5 cm $\pm$0.25.

(3) Repeat procedures given in (2) above for each position of the SENSITIVITY switch. Set the voltmeter-calibrator output as necessary to provide an adequate deflection on the crt. The deflection should be in accordance with the following formula:

$$\frac{\text{Output voltage}}{\text{SENSITIVITY}} = \text{cm} \pm 5\%.$$

b. Channel B Vertical Sensitivity. To check channel B vertical sensitivity, repeat procedures given in *a*(1), (2), and (3) above, except the vertical presentation switch should be set to

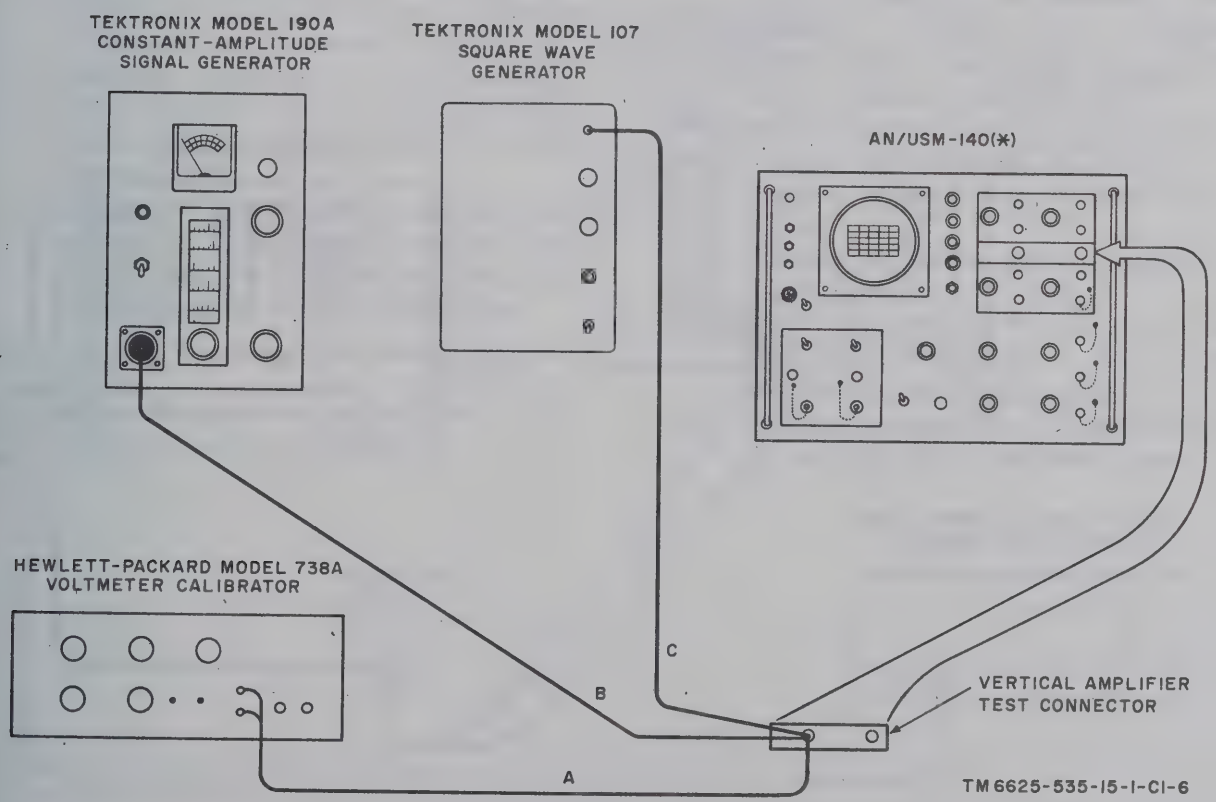

Figure 7–6. Main vertical amplifier test.

CHANNEL B, and the voltmeter-calibrator should be connected to the CHANNEL B INPUT connector.

c. Vertical Pulse Response Test. Perform the vertical pulse response test as follows:

(1) Controls of the oscilloscope should be set as described in *a* above, except that the CHANNEL A SENSITIVITY switch should be set to 0.02 VOLTS/CM and the SWEEP TIME switch should be set to 0.2 MICROSECOND/CM.

(2) Connect the equipment as shown in B, figure 7–7. Set the square wave generator to produce a 0.25-volt, alternating current (ac) peak-to-peak signal.

(3) The vertical overshoot on the leading edge of the signal must not exceed 3%.

(4) Repeat procedures given in (1), (2), and (3) above for the CHANNEL B input.

d. Vertical Bandwidth Test. Perform the vertical bandwidth test as described in (1) through (4) below.

(1) Set controls of the oscilloscope as follows:

(*a*) SENSITIVITY: .02 VOLTS/CM.

(*b*) HORIZONTAL DISPLAY: X1.

(2) Connect the equipment as shown in C, figure 7–7, and set the constant-amplitude signal generator to deliver a 50-kc signal. Adjust the amplitude of the constant-amplitude signal generator to provide exactly 4 cm of deflection on the crt screen.

(3) Increase the frequency of the constant-amplitude signal generator until the height of the display on the crt is exactly 2.8 cm. The output frequency must not be less than 22 mc.

(4) Repeat procedures given in (1), (2), and (3) above for the CHANNEL B input.

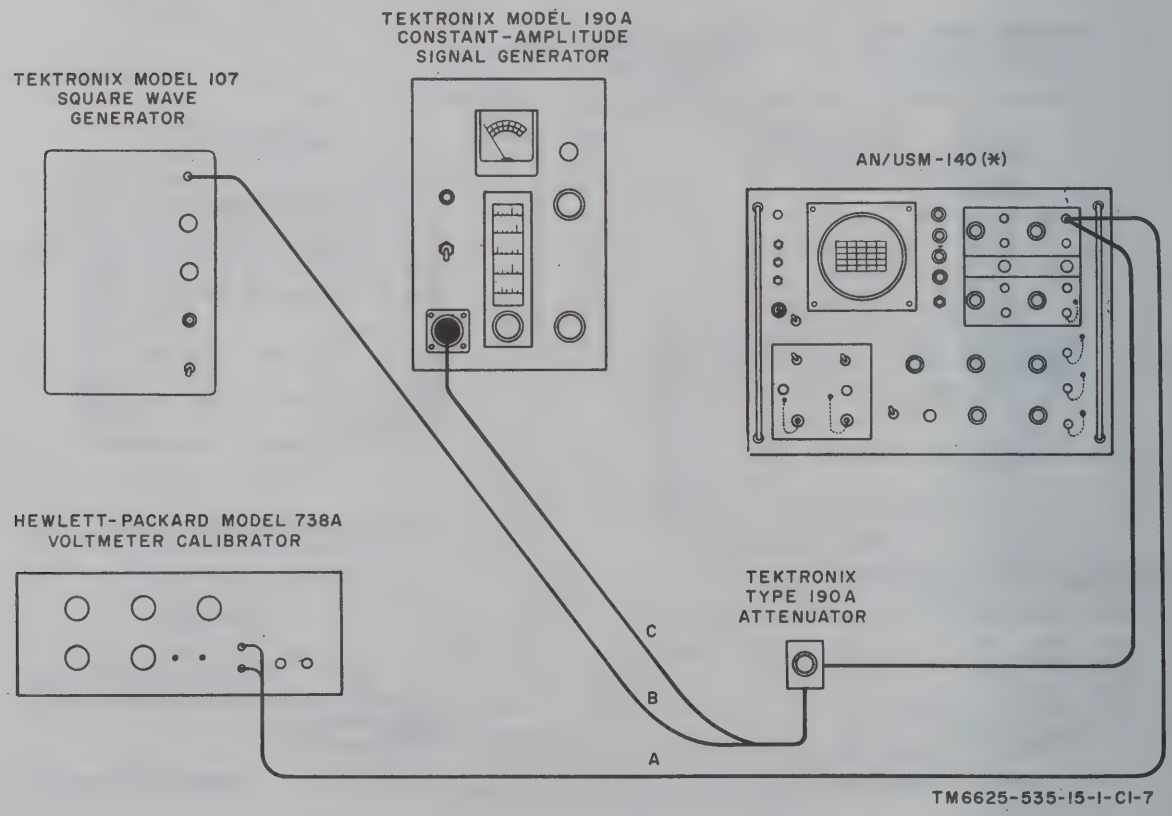

Figure 7–7. MX–2930B/USM vertical plug-in test.

e. Isolation Test. Conduct the isolation test as follows:

(1) Set controls of the oscilloscope as follows:
- (*a*) Vertical presentation switch: CHANNEL B.
- (*b*) Channel A SENSITIVITY control: .02 VOLTS/CM.
- (*c*) Channel B SENSITIVITY control: 0.5 VOLTS/CM.
- (*d*) HORIZONTAL DISPLAY: X1.
- (*e*) SWEEP TIME: 1 MILLISECOND/CM.

(2) Center display with the VERTICAL POSITION control and apply a 20-volt signal from the CALIBRATOR output to the CHANNEL A input, note the deflection. Reverse the procedures given in (1) above and note the deflection. The deflection in either case should not exceed 0.3 cm.

f. Common Mode Rejection Test. Perform the common mode rejection test as follows:

(1) Connect the output of the CALIBRATOR to CHANNEL A and B inputs (through a T connector). Change the vertical presentation switch to A–B, the AC–DC switch to DC, and leave the HORIZONTAL DISPLAY switch placed at X1.

(2) Measure the common mode rejection on all SENSITIVITY ranges and note that the deflection corresponds to that given in the chart below:

A & B SENSITIVITY	Input voltage	Deflection (cm)
.02	2	1
.05	5	3
.10	10	3
.20	20	3
.50	50	3
1.00	100	3
2.00	100	1.5
5.00	100	0.6
10.00	100	0.3
20.00	100	0.15

g. Chopped Display Test. Perform the chopped display test as follows:

(1) Remove all connections from the INPUT connectors.

(2) Set controls of the oscilloscope as follows:
- (*a*) Vertical presentation switch: CHOPPED.
- (*b*) SWEEP TIME: .5 MICROSECONDS/CM.

(3) Adjust the VERTCIAL POSITION control for two, distinct, chopped traces.

(4) The chopped period should be between 0.9 and 1.1 microseconds. The transition between the chopped traces should be blanked out at the normal intensity levels.

h. Alternate Display Test. To perform the alternate display test, proceed as follows:

(1) Leave controls set as described in *g* above.

(2) Set the vertical presentation switch to ALTERNATE.

(3) Vary the SWEEP TIME from 20 MILLISECONDS/CM to 0.1 MICROSECONDS/CM.

(4) The display should show two distinct traces throughout the sweep range.

APPENDIX I

REFERENCES

DA Pam 310-4	Index of Technical Manuals, Technical Bulletins, Supply Manuals (Types 7, 8, and 9), Supply Bulletins, Lubrication Orders, and Modification Work Orders.
TB SIG 364	Field Instructions for Painting and Preserving Electronics Command Equipment.
TM 38-750	Army Equipment Record Procedures.

APPENDIX II

BASIC ISSUE ITEMS LIST

Section I. INTRODUCTION

A2-1. General

This appendix lists items supplied for initial operation and for running spares. The list includes tools, parts, and material issued as part of the major end item. The list includes all items authorized for basic operator maintenance of the equipment. End items of equipment are issued on the basis of allowances prescribed in equipment authorization tables and other documents that are a basis for requisitioning.

A2-2. Columns

Columns are as follows:

a. Federal Stock Number. This column lists the 11-digit Federal stock number.

b. Designation by Model. Not used.

c. Description. Nomenclature or the standard item name and brief identifying data for each item are listed in this column. When requisitioning, enter the nomenclature and description.

d. Unit of Issue. The unit of issue is each unless otherwise indicated and is the supply term by which the individual item is counted for procurement, storage, requisitioning, allowances, and issue purposes.

e. Expendability. Nonexpendable items are indicated by NX. Expendable items are not annotated.

f. Quantity Authorized. Under "Items Comprising an Operable Equipment", the column lists the quantity of items supplied for the initial operation of the equipment. Under "Running Spare Items" the quantites listed are those issued initially with the equipment as spare parts. The quantities are authorized to be kept on hand by the operator for maintenance of the equipment.

g. Illustration. The "Item No." column lists the reference symbols used for identification of the items in the illustration or text of the manual.

FEDERAL STOCK NUMBER	DESIGNATION BY MODEL	DESCRIPTION	UNIT OF ISSUE	EXP	QTY AUTH	ILLUSTRATION	
						FIGURE NO.	ITEM NO.
6625-987-6603		OSCILLOSCOPE AN/USM-140B: 5 in screen; .008 cps to 120,000 cps freq range; 1 m sec to 150 sec sweep duration; 0.5 to 60 v peak-to-peak amplitude; 0.02 v peak-to-peak per cm vertical deflection, 0.1 v peak-to-peak horizontal deflection sensitivity thru amplifier; 7 peak-to-peak v per cm vertical, 30 peak-to-peak v per cm horizontal sensitivity for direct connection to plates; 0 to 1 mc per sec on X-axis, 0 to 22 mc per sec on Y-axis, frequency response; 24-1/8 in lg x 14-3/4 in h; bench mounted; new power supply in OS-121B/USM-140 and different maintenance parts in MX-2930B/USM		NX			
		ITEMS COMPRISING AN OPERABLE EQUIPMENT					
ORD THRU AGC		TECHNICAL MANUAL TM 11-6625-535-15/1			1		
		NOTE: A quantity of 1 technical manual is packed with each equipment. Where a valid need exists, additional copies may be requisitioned and kept on hand.					
		OSCILLOSCOPE OS-121B/USM-140		NX	1		
		PREAMPLIFIER, DUAL TRACE MX-2930B/USM (Plugged in to OA-121/USM-140)		NX	1		
6625-961-5888		AUXILIARY PLUG-IN MX-3078/USM (Plugged in to OS-121/USM-140)		NX	1		
6625-071-0789		COVER, OSCILLOSCOPE CW-511/USM			1		
6625-973-4775		PROD, TEST MX-4073/U (Mounted in equipment)		NX	2		
5935-823-0639		CONNECTOR, ADAPTER UG-255A/U (Mounted in equipment)			2		
5935-149-3534		CONNECTOR, ADAPTER UG-273/U (Mounted in equipment)					
5995-985-7744		CABLE ASSEMBLY, POWER, ELECTRICAL CX-4704/U (8 ft 0 in) (Mounted in equipment)					
5995-752-8781		CORD CG-409F/U (Mounted in equipment)			2		
5935-683-7892		CONNECTOR, ADAPTER: MIL type MS35173-274B (Mounted in equipment)			2		
4935-992-6112		ADAPTER, CONNECTOR UG-1441/U			4		

FEDERAL STOCK NUMBER	DESIGNATION BY MODEL	DESCRIPTION	UNIT OF ISSUE	EXP	QTY AUTH	ILLUSTRATION	
						FIGURE NO.	ITEM NO.
		AN/USM-140B (continued)					
		RUNNING SPARE ITEMS					
5920-280-4465		FUSE, CARTRIDGE: 1 amp; 250 v; MIL type F02A250V1AS			5		F404,405
5920-519-7733		FUSE, CARTRIDGE: 8 amp; 250 v; MIL type F03A250V8AS			3		F401,402
5920-281-0224		FUSE, CARTRIDGE: 0.5 amp; 250 v; MIL type F02A250V1/2AS			5		F403
5920-846-5726		FUSE, CARTRIDGE: 10 amp; 32 v; SLO-BLO; MIL type F03B32V10AS			3		F406
6240-683-0580		LAMP, GLOW: MIL type MS25252-NE2D			1		DS401, 2001
6240-539-8959		LAMP, GLOW: GE type NE76			1		DS402
6240-155-8706		LAMP, INCANDESCENT: 6-8 v; 0.15 amp; GE p/n 47			2		DS403-406, DS1001

APPENDIX III

MAINTENANCE ALLOCATION CHART

Section I. INTRODUCTION

A3-1. General

This appendix provides a summary of the maintenance operations covered in the equipment literature for Oscilloscope AN/USM-140B. It authorizes levels of maintenance for specific maintenance functions on repairable items and components and the tools and equipment required to perform each function. This appendix may be used as an aid in planning maintenance operations.

A3-2. Explanation of Format for Maintenance Allocation Chart

a. Group Number. Group numbers correspond to the reference designation prefix assigned in accordance with ASA Y32.16, Electrical and Electronics Reference Designations. They indicate the relation of listed items to the next higher assembly.

b. Component Assembly Nomenclature. This column lists the item names of component units, assemblies, subassemblies, and modules on which maintenance is authorized.

c. Maintenance Function. This column indicates the maintenance level at which performance of the specific maintenance function is authorized. Authorization to perform a function at any level also includes authorization to perform that function at higher levels. The numbers used to represent the various maintenance levels are as follows:

Number	Maintenance Category (or level)
1	Operator's
2	Organizational
3	Direct support
4	General support
5	Depot

d. Tools and Equipment. The numbers appearing in this column refer to specific tools and equipment which are identified by these numbers in Section III.

e. Remarks. Self explanatory.

A3-3. Explanation of Format for Tool and Test Equipment Requirements

The columns in the tool and test equipment requirements chart are as follows:

a. Tools and Equipment. The numbers in this column coincide with the numbers used in the tools and equipment column of the MAC. The numbers indicate the applicable tool for the maintenance function.

b. Maintenance Category. The numbers in this column indicate the maintenance category normally allocated the facility.

c. Nomenclature. This column lists tools, and test, and maintenance equipment required to perform the maintenance functions.

d. Federal Stock Number. This column lists the Federal stock number.

e. Tool Number. Not used.

SECTION II. MAINTENANCE ALLOCATION CHART

MAINTENANCE ALLOCATION CHART

GROUP NUMBER	COMPONENT ASSEMBLY NOMENCLATURE	MAINTENANCE FUNCTIONS											TOOLS AND EQUIPMENT	REMARKS
		INSPECT	TEST	SERVICE	ADJUST	ALIGN	CALIBRATE	INSTALL	REPLACE	REPAIR	OVERHAUL	REBUILD		
	OSCILLOSCOPE AN/USM-140B	1		1										
					4								1,2,4	
			4										1,2,4,5,6,8	
										2			10	Replace fuses, lamps
										4			9	
						4							1,2,4,5,6	
							5						1,2,3,4,5,6,7,9	After change of tubes, resistors, etc.
											5		1 thru 9	
	OSCILLOSCOPE OS-121B/USM-140								2					
										2			10	Replace fuses, lamps
										4			9	
	PREAMPLIFIER, DUAL TRACE MX-2390B/USM								2					
										4			9	
	AUXILIARY PLUG-IN MX-3078/USM								2					
										4			9	
	PROD, TEST MX-4073/U									4			9	
	CABLE ASSEMBLIES									4			9	

TOOL AND TEST EQUIPMENT REQUIREMENTS

TOOLS AND EQUIPMENT	MAINTENANCE CATEGORY	NOMENCLATURE	FEDERAL STOCK NUMBER	TOOL NUMBER
1	4,5	GENERATOR, SIGNAL AN/URM-127	6625-783-5965	
2	4,5	COUNTER, ELECTRONIC, DIGITAL READOUT AN/USM-207	6625-911-6368	
3	5	GENERATOR, ELECTRONIC MARKER AN/USM-108	6625-987-9564	
4	4,5	MULTIMETER ME-26/U	6625-646-9409	
5	4,5	OSCILLOSCOPE AN/USM-140B	6625-987-6603	
6	4,5	SIGNAL GENERATOR SG-299/U	6625-624-3516	
7	5	TEST SET, ELECTRON TUBE TV-2/U	6625-699-0263	
8	4	TEST SET, ELECTRON TUBE TV-7D/U	6625-820-0064	
9	4,5	TOOL KIT, ELECTRONIC EQUIPMENT TK-100/G	5180-605-0079	
10	2	TOOLS AND TEST EQUIPMENT AVAILABLE TO REPAIRMAN-USER BECAUSE OF HIS ASSIGNED MISSION		

APPENDIX IV

ORGANIZATIONAL, DS, GS, AND DEPOT MAINTENANCE REPAIR PARTS AND SPECIAL TOOLS LIST

Section I. INTRODUCTION

A4-1. Scope

This appendix lists repair parts required for the performance of organizational, general support, and depot maintenance of the AN/USM-140B and AN/USM-140C. This appendix is current as of 2 March 1971.

NOTE

No parts are authorized for stockage at direct support category of maintenance.

A4-2. General

This Repair Parts List is divided into the following sections:

a. Prescribed Load Allowance (PLA)—Section II. A composite listing of repair parts having quantitative allowances for initial stockage at the organizational level.

b. Repair Parts for Organizational Maintenance—Section III. A list of repair parts authorized for the performance of maintenance at the organizational level.

c. Special Tools, Test and Support Equipment for Organizational Maintenance—Section IV. Not applicable.

d. Repair Parts for Direct Support, General Support, and Depot Maintenance—Section V. A list of repair parts authorized for the performance of maintenance at the general support and depot level.

e. Special Tools, Test and Support Equipment for Direct Support, General Support, and Depot Maintenance—Section VI. Not applicable.

f. Index-Federal Stock Number Cross-Reference to Figure and Item Number or Reference Designation—Section VII. A list of Federal stock numbers in ascending numerical sequence, followed by a list of reference numbers in ascending alphanumeric sequence, cross-referenced to the illustration figure number and reference designation.

g. Index-Reference Designation Cross-Reference to Page Number—Section VIII. A list of reference designations cross-referenced to page numbers.

A4-3. Explanation of Columns

The following provides an explanation of columns in the tabular lists:

a. Source, Maintenance, and Recoverability Codes (SMR).

(1) Source code indicates the selection status and source for the list item. Source codes are:

Code	*Explanation*
P	Repair parts which are stocked in or supplied from the GSA/DSA or Army Supply system and authorized for use at indicated maintenance categories.
P2	Repair parts which are procured and stocked for insurance purposes because the combat or military essentiality of the end item dictates that a minimum quantity be available in the supply system.
P9	Assigned to items which are NSA design controlled: unique repair parts, special tools, test, measuring and diagnostic equipment which are stocked and supplied by the Army COMSEC logistic system and which are not subject to the provisions of AR 380-41.

Code	Explanation
P10	Assigned to items which are NSA design controlled: special tools, test, measuring and diagnostic equipment for COMSEC support which are accountable under the provisions of AR 380-41 and which are stocked and supplied by the Army COMSEC logistic system.
M	Repair parts which are not procured or stocked but are to be maufactured in indicated maintenance levels.
A	Assemblies which are not procured or stocked as such but are made up of two or more units. Such component units carry individual stock numbers and descriptions, are procured and stocked separately, and can be assembled to form the required assembly at indicated maintenance categories.
X	Parts and assemblies which are not procured or stocked and the mortality of which normally is below that of the applicable end item of component. The failure of such part or assembly should result in retirement of the end item from the supply system.
X1	Repair parts which are not procured or stocked. The requirement for such items will be filled by use of the next higher assembly or component.
X2	Repair parts which are not stocked. The indicated maintenance category requiring such repair parts will attempt to obtain same through cannibalization. Where such repair parts are not obtainable through cannibalization, requirements will be requisitioned, with accompanying justification, through normal supply channels.
G	Major assemblies that are procured with PEMA funds for initial issue only as exchange assemblies at DSU and GSU level. These assemblies will not be stocked above DS and GS level or returned to depot supply level.

(2) Maintenance code indicates the lowest category of maintenance authorized to install the listed item. The maintenance level codes are:

Code	Explanation
C	Operator/Crew
O	Organizational Maintenance
F	Direct Support Maintenance
H	General Support Maintenance
D	Depot Maintenance

(3) Recoverability code indicates whether unserviceable items should be returned for recovery or salvage. Items not coded are expendable. Recoverability codes are:

Code	Explanation
R	Repair parts and assemblies that are economically repairable at DSU and GSU activities and normally are furnished by supply on an exchange basis.
S	Repair parts and assemblies which are economically repairable at DSU and GSU activities and which normally are furnished by supply on an exchange basis. When items are determined by GSU to be uneconomically reparable, they will be evacuated to a depot for evaluation and analysis before final disposition.
T	High dollar value recoverable repair parts which are subject to special handling and are issued on an exchange basis. Such repair parts normally are repaired or overhauled at depot maintenance activities.
U	Repair parts specifically selected for salvage by reclamation units because of precious metal content, critical materials, or high dollar value reusable casings or castings.

b. Federal Stock Number. Indicates the Federal stock number assigned to the item and will be used for requisitioning purposes.

c. Description. Indicates the Federal item name and any additional description of the item required. The index number has been included as part of the description to aid in the location of "same as" items. A part number, or other reference number, is followed by the applicable five-digit Federal supply code for manufacturers in parentheses.

d. Unit of Measure (U/M). A two-character alphabetic abbreviation indicating the amount or quantity of the item upon which the allowances are based, e.g., ft, ea, pr, etc.

e. Quantity Incorporated in Unit. Indicates the quantity of the item used in the AN/USM-140B and AN/USM-140C. Subsequent appearances of the same item in the same assembly are indicated by the letters "REF."

f. 15-Day Organizational Maintenance Allowances.

(1) The allowance columns are divided into four subcolumns. Indicated in each subcolumn opposite the first appearance of each item is the total quantity of items authorized for the number of equipments supported. Subsequent appearances of the same item will have the letters "REF" in the allowance columns. Items autho-

rized for use as required, but not for initial stockage, are identified with an asterisk in the allowance column.

(2) The quantitative allowances for organizational level of maintenance represents one initial prescribed load for a 15-day period for the number of equipments supported. Units and organizations authorized additional prescribed loads will multiply the number of prescribed loads authorized by the quantity of repair parts reflected in the appropriate density column to obtain the total quantity of repair parts authorized.

(3) Organizational units providing maintenance for more than 100 of these equipments shall determine the total quantity of parts required by converting the equipment quantity to a decimal factor by placing a decimal point before the next to last digit of the number to indicate hundredths, and multiplying the decimal factor by the parts quantity authorized in the 51–100 allowance column. *Example,* authorized allowance for 51–100 equipments is 12; for 140 equipments multiply 12 by 1.40 or 16.80 rounded off to 17 parts required.

(4) Subsequent changes to allowances will be limited as follows: No change in the range of items is authorized. If additional items are considered necessary, recommendation should be forwarded to Commanding General, U.S. Army Electronics Command, ATTN: AMSEL–ME–NMP–EM, Fort Monmouth, N.J. 07703 for exception or revision to the allowance list. Revisions to the range of items authorized will be made by the USAECOM based upon engineering experience, demand data, of TAERS information.

g. 30-Day DS/GS Maintenance Allowances.

NOTE

Allowances in GS Column are for GS maintenance only.

(1) The allowance columns are divided into three subcolumns. Indicated in each subcolumn, opposite the first appearance of each item, is the total quantity of items authorized for the number of equipments supported. Subsequent appearances of the same item will have the letters "REF" in the applicable allowance columns. Items authorized for use as required, but not for initial stockage, are identified with an asterisk in the allowance column.

(2) The quantitative allowances for GS level of maintenance will represent initial stockage for a 30-day period for the number of equipments supported.

(3) Determination of the total quantity of parts required for maintenance of more than 100 of these equipments can be accomplished by converting the equipment quantity to a decimal factor by placing a decimal point before the next to last digit of the number to indicate hundredths, and multiplying the decimal factor by the parts quantity authorized in the 51–100 allowance column. *Example,* authorized allowance for 51–100 equipments is 40; for 150 equipments multiply 40 by 1.50 or 60 parts required.

h. 1-Year Allowances Per 100 Equipments/ Contingency Planning Purposes. Indicates opposite the first appearance of each item the total quantity required for distribution and contingency planning purposes. The range of items indicates total quantities of all authorized items required to provide for adequate support of 100 equipments for one year.

i. Depot Maintenance Allowance Per 100 Equipments. Indicates opposite the first appearance of each item the total quantity authorized for depot maintenance of 100 equipments. Subsequent appearances of the same item will have the letters "REF" in the allowance column. Items authorized for use as required, but not for initial stockage, are identified with an asterisk in the allowance column.

j. Illustrations.

(1) *Figure number.* Indicates the figure number of the illustration in which the item is shown.

(2) *Item number or reference designation.* Indicates the reference designation used to identify the item in the illustration.

A4–4. Special Information

a. Identification of the usable on codes of this publication are:

Code	Used on
1	AN/USM-140B
2	AN/USM-140C

b. Repair parts mortality is computed from failure rates derived from experience factors with the individual parts in a variety of equipments. Variations in the specific application and periods of use of electronics equipment, the fragility of electronic piece parts, plus intangible material and quality factors intrinsic to the manufacture of electronic parts, do not permit mortality to be based on hours of end item use. However, long periods of continuous use under adverse conditions are likely to increase repair parts mortality.

A4–5. Location of Repair Parts

a. This appendix contains two cross-reference indexes (sec VII and VIII) to be used to locate a repair part when either the Federal stock number, reference number (manufacturer's part number), or reference designation is known. The first column in each index is prepared in numerical and/or alphanumeric sequence in ascending order. Where a Federal stock number is not listed, refer to the reference number (manufacturer's part number) immediately following the Federal stock number.

b. When the Federal stock number is known, follow the procedures given in (1) and (2) below.

(1) Refer to the index of Federal stock numbers (sec VII) and locate the Federal stock number. The FSN is cross-referenced to the applicable figure and reference designation.

(2) When the reference designation is determined, refer to the reference designation index (sec VIII). The reference designations are listed in alphanumeric ascending order and are cross-referenced to the page number on which they appear in the repair parts list (sec III and V). Refer to the page number noted in the index and locate the reference designation in the repair parts list (col. 7b, Repair Parts for Organizational Maintenance; or col. 10b, Repair Parts for Direct Support, General Support, and Depot Maintenance).

If the word "REF" appears in the allowance column for the repair part, note the Federal stock number (col. 2) or manufacturer's part number (col. 3). Refer to the FSN index and note the reference designation for that FSN or part number. Refer to the reference designation index and note the page number given for the reference designation. Refer to the page noted in the RPSTL (sec III or V) and locate the reference designation in column 7b, Repair Parts for Organizational Maintenance; or col. 10b, Repair Parts for Direct Support, General Support, and Depot Maintenance, of the repair parts list.

c. When the reference designation is known, follow the procedures given in *b*(2) above.

d. When neither the FSN nor reference designation is known, identify the part in the illustration and follow directions given in *c* above, or scrutinize column 3 of the repair parts lists (sec III and V).

A4–6. Federal Supply Code for Manufacturers

Code	Manufacturer
00853	Sangamo Electronic Co. S. Carolina Div.
01121	Allen-Bradley Co.
01295	Texas Instruments Inc. Semiconductor & Components Div.
02286	Cole Rubber and Plastics Inc.
02660	Amphenol Corp.
04713	Motorola Semiconductor Products Inc.
06540	Amatom Electronic Hardware Co. Inc.
12697	Carostat Mfg. Co. Inc.
14674	Corning Glass Works
16299	Corning Glass Works Electronic Components Division
19701	Electra/Midland Co.
24455	General Electric Co., Lamp Division of Consumer Products Group
28480	Hewlett-Packard Co.
28569	Hickok Electrical Instrument Co.
56289	Sprague Electric Co.
62119	Universal Electric Co.
71450	CTS Corp.
71590	Globe-Union Inc. Centralab Div.
71785	Cinch Mfg. Co. and Howard B. Jones Div.
72825	Hugh H. Eby Inc.
72982	Erie Technological Products Inc.
75382	Kolton Electric Mfg. Co.
80063	Army Electronics Command

Code	Manufacturer
81349	Military Specifications
82647	Metals and Controls Inc. Control Products Group
83330	Herman H. Smith Inc.
91418	Radio Materials Co.
91637	Dale Electronics Inc.
91662	Elco Corp.
94222	South Chester Corp.
94330	Wire Cloth Products Inc.
95265	National Coil Co.
95354	Methode Manufacturing Corp.
96906	Military Standards
98003	Nielsen Hardware Corp.
98291	Sealectro Corp.
98734	Hewlett-Packard Co. Paeco Division
99800	Delevan Electronics Corp.

SECTION II. PRESCRIBED LOAD ALLOWANCE

(1) FEDERAL STOCK NUMBER	(2) DESCRIPTION	USABLE ON CODE	(3) 15-DAY ORG. MAINT. ALLOWANCE (a) 1-5	(b) 6-20	(c) 21-50	(d) 51-100
5330-917-7011	GASKET, RUBBER: 496X (02286)	1		6	48	200
5920-280-4465	FUSE, CARTRIDGE: F02A250V1AS (81349)	1,2	2	2	6	11
5920-280-8344	FUSE, CARTRIDGE: F02A250V1/2AS (81349)	1,2	2	2	3	6
5920-295-9270	FUSE, CARTRIDGE: F03B32V10AS (81349)	1,2	2	2	3	6
5920-519-7733	FUSE, CARTRIDGE: F03A250V8AS (81349)	2	2	2	6	11
5920-894-4556	FUSE, CARTRIDGE: F03B250V8AS (81349)	1	2	2	6	11
5935-149-3534	ADAPTER, CONNECTOR UG-273A/U	1,2				2
5935-683-7892	ADAPTER, CONNECTOR UG-274B/U	1,2				2
5935-823-0639	ADAPTER, CONNECTOR UG-255/U	1,2				2
5935-856-9441	ADAPTER, CONNECTOR UG-1035/U	1			2	2
5935-962-8580	ADAPTER, CONNECTOR UG-1441/U	2			2	2
6240-155-8706	LAMP, INCANDESCENT: MS15571-2 (81349)	1,2		2	2	3
6625-758-4949	GROUND CABLE: 5060-0401 (28480)	1			2	2

SECTION III. REPAIR PARTS FOR ORGANIZATIONAL MAINTENANCE

(1) SMR CODE	(2) FEDERAL STOCK NUMBER	(3) DESCRIPTION Reference Number & Mfr Code		USABLE ON CODE	(4) UNIT OF MEAS	(5) QTY INC IN UNIT	(6) 15-DAY ORGANIZATIONAL MAINTENANCE ALW (a) 1-5	(b) 6-20	(c) 21-50	(d) 51-100	(7) ILLUSTRATIONS (a) FIG NO.	(b) ITEM NO. OR REFERENCE DESIGNATION
	6625-072-5589	1	OSCILLOSCOPE AN/USM-140B	1								
	6625-999-3592	1A	OSCILLOSCOPE AN/USM-140C	2								
G-C-T	6625-400-2681	2	OSCILLOSCOPE OS-121B/USM-140	1	EA	1					1-1	
G-C-T		2A	OSCILLOSCOPE OS-121C/USM-140	2	EA	1					1-1	
P-O	5935-823-0639	3	ADAPTER, CONNECTOR UG-255/U	1,2	EA	2	*	*	*	2	1-1	CP601,CP602
P-O	5935-149-3534	4	ADAPTER, CONNECTOR UG-273A/U	1,2	EA	2	*	*	*	2	1-1	CP603,CP604
P-O	5935-683-7892	5	ADAPTER, CONNECTOR UG-274B/U	1,2	EA	2	*	*	*	2	1-1	CP605,CP606
P-C	5935-856-9441	6	ADAPTER, CONNECTOR UG-1035/U	1	EA	4	*	*	2	2	1-1	CP607 thru CP610
P-C	5935-962-8580	7	ADAPTER, CONNECTOR UG-1441/U	2	EA	4	*	*	2	2	1-1	CP607 thru CP610
P-O	6240-155-8706	465	LAMP, INCANDESCENT: MS15571-2 (81349)	1,2	EA	5	*	2	2	3	5-9 5-13	DS403 thru DS406 DS1001
P-O	5920-894-4556	467	FUSE, CARTRIDGE: F03B250V8AS (81349)	1	EA	2	2	2	6	11	5-11	F401,F402
P-O	5920-519-7733	468	FUSE, CARTRIDGE: F03A250V8AS (81349)	2	EA	2	2	2	6	11	5-11	F401,F402
P-O	5920-280-8344	469	FUSE, CARTRIDGE: F02A250V1/2AS (81349)	1,2	EA	1	2	2	3	6	5-11	F403
P-O	5920-280-4465	470	FUSE, CARTRIDGE: F02A250V1AS (81349)	1,2	EA	2	2	2	6	11	5-10	F404,F405
P-O	5920-295-9270	471	FUSE, CARTRIDGE: F03B32V10AS (81349)	1,2	EA	1	2	2	3	6	5-11	F406
P-O	4110-727-8796	487	FILTER, AIR CONDITIONER: C-7066-3 (94330)	1,2	EA	1	*	*	*	*	2-2	MP147
P-O	5330-917-7011	499	GASKET, RUBBER: 496X (02286)	1	FT	6	*	6	48	200	1-1	MP609
P-O	6625-072-5227	757	TEST PROD MX-2817/U	1	EA	2	*	*	*	*	5-35	A601,A602
P-O	6625-758-4949	758	GROUND CABLE: 5060-0401 (28480)	1	EA	2	*	*	2	2	5-35	W603,W604
P-O	6625-973-4775	759	PROD, TEST MX-4073A/U	2	EA	2	*	*	*	*	5-35A	
P-O		760	NUT, LOCKING: 6115-3 (28569)	2	EA	1	*	*	*	*	5-35A	E702
P-O	6625-167-9297	761	PROBE, TIP: 16975-54 (28569)	2	EA	1	*	*	*	*	5-35A	E703
P-O	6625-167-9798	762	PROBE, TIP: 16975-62 (28569)	2	EA	1	*	*	*	*	5-35A	E704
P-O	5935-502-0342	763	PROBE, TIP: 100 (83330)	2	EA	1	*	*	*	*	5-35A	E704
P-O	6625-167-9793	764	PROBE, TIP: 16970-63 (28569)	2	EA	1	*	*	*	*	5-35A	E706
P-O	6625-167-9794	765	PROBE, TIP: 16970-64 (28569)	2	EA	1	*	*	*	*	5-35A	E707
P-O	6625-167-9795	766	PROBE, TIP: 16970-75 (28569)	2	EA	1	*	*	*	*	5-35A	E708
P-O	6625-453-5650	767	CABLE ASSEMBLY: 3030-163 (28569)	2	EA	1	*	*	*	*	5-35A	W701
P-O	6625-436-1588	768	LEAD, GROUND: 3030-164 (28569)	2	EA	1	*	*	*	*	5-35A	W701

(1) SMR CODE	(2) FEDERAL STOCK NUMBER	(3) DESCRIPTION REFERENCE NUMBER & MFR. CODE		USABLE ON CODE	(4) UNIT OF MEAS	(5) QTY INC IN UNIT	(6) 30-DAY DS MAINT ALLOWANCE (a) 1-20	(b) 21-50	(c) 51-100	(7) 30-DAY GS MAINT ALLOWANCE (a) 1-20	(b) 21-50	(c) 51-100	(8) 1 YR ALW PER EQUIP CNTGCY	(9) DEPOT MAINT ALW PER 100 EQUIP	(10) ILLUSTRATIONS (a) FIG NO.	(b) ITEM NO. OR REFERENCE DESIGNATION
	6625-072-5589	1	OSCILLOSCOPE AN/USM-140B	1												
	6625-999-3592	1A	OSCILLOSCOPE AN/USM-140C	2												
G-C-T	6625-400-2681	2	OSCILLOSCOPE OS-121B/USM-140	1	EA	1									1-1	
G-C-T		2A	OSCILLOSCOPE OS-121C/USM-140	2	EA	1									1-1	
P-O	5935-823-0639	3	ADAPTER, CONNECTOR UG-255/U	1,2	EA	2				*	2	2	13	12	1-1	CP601,CP602
P-O	5935-149-3534	4	ADAPTER, CONNECTOR UG-273A/U	1,2	EA	2				*	2	2	13	12	1-1	CP603, CP604
P-O	5935-683-7892	5	ADAPTER, CONNECTOR UG-274B/U	1,2	EA	2				*	2	2	13	12	1-1	CP605, CP606
P-C	5935-856-9441	6	ADAPTER, CONNECTOR UG-1035/U	1	EA	4				*	2	2	21	20	1-1	CP607 thru CP610
P-C	5935-962-8580	7	ADAPTER, CONNECTOR UG-1441/U	2	EA	4				*	2	2	21	20	1-1	CP607 thru CP610
A-H		8	MAIN VERTICAL INPUT AMPLIFIER AND INTERNAL TRIGGER SOURCE ETCHED CIRCUIT ASSEMBLY: 170A-65S(N) (28480)	1	EA	1									5-14	A1
A-H		9	MAIN VERTICAL INPUT AMPLIFIER AND INTERNAL TRIGGER SOURCE ETCHED CIRCUIT ASSEMBLY: 2420-735 (28569)	2	EA	1									5-14A	A1
P-H	5910-993-8367	10	CAPACITOR, FIXED CERAMIC DIELECTRIC: CK63AY103X (81349)	1,2	EA	3				2	4	8	102	114	5-14	C1, C14, C15
P-H	5910-934-0327	11	CAPACITOR, FIXED CERAMIC DIELECTRIC: 841-000-Z5U0203M (72982)	1,2	EA	6				*	2	2	33	30	5-14	C2, C7, C8, C10, C12, C13
P-H	5910-064-2344	12	CAPACITOR, FIXED MICA DIELECTRIC: CM15D331JN3 (81349)	1,2	EA	1				*	*	2	8	3	5-14	C9
P-H	5910-889-4777	13	CAPACITOR, FIXED MICA DIELECTRIC: CM15C820JN3 (81349)	1,2	EA	1				*	2	2	13	6	5-14	C11
P-H	5950-728-5333	14	COIL, RADIOFREQUENCY: 170A-60F(N) (28480)	1	EA	2				*	2	2	13	6	5-14	L1, L2
P-H	5950-957-3013	15	COIL, RADIOFREQUENCY: 1025-02 (99800)	2	EA	2				*	2	2	13	10	5-14A	L1, L2
P-H	5950-754-9896	16	COIL, RADIOFREQUENCY: MS75008-5 (81349)	1	EA	2				2	2	3	40	24	5-14	L3, L5
P-H	5950-053-8245	17	COIL, RADIOFREQUENCY: MS75008-26 (96906)	2	EA	2				2	2	3	39	40	5-14A	L3, L5
P-H	5950-893-1608	18	COIL, RADIOFREQUENCY: 170A-60D(N) (28480)	1	EA	2				*	*	2	13	6	5-14	L4, L6
P-H	5950-052-2905	19	COIL, RADIOFREQUENCY: 3320-354 (28569)	2	EA	2				*	2	2	13	10	5-14A	L4, L6
P-H	5950-852-5167	20	COIL, RADIOFREQUENCY: MS75008-10 (81349)	1	EA	1				*	2	2	18	9	5-14	L9
P-H	5950-701-5926	21	COIL, RADIOFREQUENCY: MS75008-34 (81349)	2	EA	1				2	2	3	34	35	5-14A	L9
P-H	5950-810-4611	22	COIL, RADIOFREQUENCY: MS75008-13 (81349)	1 2	EA EA	1 1				* *	* *	2 2	8 8	4 4	5-14 5-14A	L10 L10
P-H	5905-252-4018	23	RESISTOR, FIXED COMPOSITION: RC20GF470J (81349)	1 2	EA EA	4 4				* 2	2 4	2 8	39 95	40 105	5-14 5-14	R1, R3, R18, R21 R1, R3, R18, R21
P-H	5905-192-0390	24	RESISTOR, FIXED COMPOSITION: RC20GF105J (81349)	1,2	EA	6				2	2	3	46	45	5-14	R2, R4, R19, R22, R26, R30

SECTION V. REPAIR PARTS FOR DIRECT SUPPORT, GENERAL SUPPORT, AND DEPOT MAINTENANCE (CONTINUED)

(1) SMR CODE	(2) FEDERAL STOCK NUMBER	(3) DESCRIPTION REFERENCE NUMBER & MFR. CODE	USABLE ON CODE	(4) UNIT OF MEAS	(5) QTY INC IN UNIT	(6) 30-DAY DS MAINT ALLOWANCE (a) 1-20	(b) 21-50	(c) 51-100	(7) 30-DAY GS MAINT ALLOWANCE (a) 1-20	(b) 21-50	(c) 51-100	(8) 1 YR ALW PER EQUIP CNTGCY	(9) DEPOT MAINT ALW PER 100 EQUIP	(10) ILLUSTRATIONS (a) FIG NO.	(b) ITEM NO. OR REFERENCE DESIGNATION
P-H	5905-769-8533	25 RESISTOR, FIXED, FILM: RL42S682J (81349)	1,2	EA	5				*	2	2	28	25	5-14	R5,R6,R12,R14,R31
P-H	5905-299-2051	26 RESISTOR, FIXED, COMPOSITION: RC32GF471J (81349)	1,2	EA	1				*	*	2	8	5	5-14	R7
P-H	5905-192-3973	27 RESISTOR, FIXED, COMPOSITION: RC20GF471J (81349)	1,2	EA	3				*	2	2	21	18	5-14	R8,R9,R32
P-H	5905-951-1478	28 RESISTOR, FIXED, FILM: RN60B9530F (81349)	1,2	EA	2				*	2	2	16	12	5-14	R11,R16
P-H	5905-767-6832	29 RESISTOR, FIXED, FILM: RL42S103J (81349)	1,2	EA	1				*	2	2	18	15	5-14	R20
P-H	5905-299-1541	30 RESISTOR, FIXED, COMPOSITION: RC20GF151J (81349)	1,2	EA	2				*	2	2	19	18	5-14	R23,R27
P-H	5905-473-5251	31 RESISTOR, FIXED, COMPOSITION: RC32GF102K (81349)	1,2	EA	1				*	*	2	8	5	5-14	R24
P-H	5905-279-1876	32 RESISTOR, FIXED, COMPOSITION: RC20GF222J (81349)	1,2	EA	1				*	2	2	13	9	5-14	R25
P-H	5905-279-1723	33 RESISTOR, FIXED, COMPOSITION: RC32GF222J (81349)	1,2	EA	1				*	*	*	5	4	5-14	R28
P-H	5905-195-6806	34 RESISTOR, FIXED, COMPOSITION: RC20GF102J (81349)	1,2	EA	1				*	2	2	16	12	5-14	R29
P-H	5905-171-2000	35 RESISTOR, FIXED, COMPOSITION: RC20GF684J (81349)	1,2	EA	1				*	*	2	8	5	5-14	R36
P-H	5905-903-6829	36 RESISTOR, FIXED, FILM: RL32S394J (81349)	1,2	EA	1				*	*	*	5	4	5-14	R37
P-H	5905-682-0230	37 RESISTOR, FIXED, WIREWOUND: RW29V272 (81349)	1,2	EA	1				*	*	*	5	4	5-14	R38
P-H	5905-913-3072	38 RESISTOR, FIXED, FILM: RL42S332J (81349)	1	EA	1				*	*	*	5	4	5-14	R39
P-H	5905-257-0926	39 RESISTOR, FIXED, COMPOSITION:	1	EA	0				*	*	*	5	4	5-14	R39
		RC42GF332J (81349)	2	EA	1				*	2	2	13	10	5-14	R39
P-H	5905-190-8883	40 RESISTOR, FIXED, COMPOSITION: RC20GF100J (81349)	1,2	EA	1				*	*	*	5	4	5-14	R40
P-H	5905-171-1998	41 RESISTOR, FIXED, COMPOSITION: RC20GF333J (81349)	1,2	EA	1				*	*	2	10	6	5-14	R41
P-H	5960-806-5614	42 ELECTRON TUBE: 7308 (81349)	1,2	EA	5				16	37	71	1614	3300	5-6	V1 thru V5
P-H	5935-808-9569	43 SOCKET, ELECTRON TUBE: 121-51-11-060 (71785)	1	EA	3				2	3	5	59	52	5-14	XV1,XV4,XV5
P-H	5935-990-2827	44 SOCKET, ELECTRON TUBE: 3908-2-2 (91662)	2	EA	3				2	3	5	59	52	5-14 5-14A	XV1 XV4,XV5
P-H	5935-849-9455	45 SOCKET, ELECTRON TUBE: 3901PHSPTD (91662)	1,2	EA	2				*	2	2	12	10	5-14	XV2,XV3
A-H		46 MAIN VERTICAL AMPLIFIER AND DRIVER ETCHED CIRCUIT ASSEMBLY: 170A-65V(N) (28480)	1	EA	1									5-15	A2
A-H		47 MAIN VERTICAL AMPLIFIER AND DRIVER ETCHED CIRCUIT ASSEMBLY: 2420-736 (28569)	2	EA	1									5-15A	A2
P-H	5910-275-6419	48 CAPACITOR, VARIABLE, PLASTIC DIELECTRIC: 535-034 4R (72982)	1,2	EA	1				2	6	11	141	114	5-15	C20
P-H	5910-993-8367	49 CAPACITOR, FIXED, CERAMIC DIELECTRIC: SAME AS 10	1,2	EA	9				REF	REF	REF	REF	REF	5-15	C21,C22,C25,C26,C27, C30,C33,C34,C35
P-H	5910-823-1068	50 CAPACITOR, FIXED, CERAMIC DIELECTRIC: CK62AW472M (81349)	1,2	EA	2				*	2	2	18	9	5-15	C23,C24
P-H	5910-578-5543	51 CAPACITOR, VARIABLE, CERAMIC DIELECTRIC: CV11B200 (81349)	1,2	EA	1				*	2	2	21	12	5-15	C31

(1) SMR CODE	(2) FEDERAL STOCK NUMBER	(3) DESCRIPTION REFERENCE NUMBER & MFR. CODE	USABLE ON CODE	(4) UNIT OF MEAS	(5) QTY INC IN UNIT	(6) 30-DAY DS MAINT ALLOWANCE (a) 1-20	(b) 21-50	(c) 51-100	(7) 30-DAY GS MAINT ALLOWANCE (a) 1-20	(b) 21-50	(c) 51-100	(8) 1 YR ALW PER EQUIP CNTGCY	(9) DEPOT MAINT ALW PER 100 EQUIP	(10) ILLUSTRATIONS (a) FIG NO.	(b) ITEM NO. OR REFERENCE DESIGNATION
P-H	5910-816-6613	52 CAPACITOR, FIXED, MICA	1	EA	1				*	*	*	5	3	5-15	C32
		DIELECTRIC: CM15C470JN3 (81349)	2	EA	1				*	2	2	13	9	5-15	C32
P-H	5950-812-2760	53 COIL, RADIOFREQUENCY: MS75008-15 (81349)	1	EA	2				*	2	2	13	6	5-15	L13, L16
P-H	5950-724-6209	54 COIL, RADIOFREQUENCY: MS75008-39 (81349)	2	EA	2				*	2	2	13	16	5-15A	L13, L16
P-H	5950-852-5167	55 COIL, RADIOFREQUENCY: SAME AS 20	1	EA	2				REF	REF	REF	REF	REF	5-15	L14, L17
P-H	5950-701-5926	56 COIL, RADIOFREQUENCY: SAME AS 21	2	EA	2				REF	REF	REF	REF	REF	5-15A	L14, L17
P-H	5950-893-1607	57 COIL, RADIOFREQUENCY: 170A-60E(N) (28480)	1	EA	2				*	2	2	13	6	5-15	L15, L18
P-H	5950-936-7655	58 COIL, RADIOFREQUENCY: 3320-279 (28569)	2	EA	2				*	2	2	13	6	5-15A	L15, L18
P-H	5950-801-1525	59 COIL, RADIOFREQUENCY: MS75008-1 (81349)	1	EA	2				*	2	2	13	6	5-15	L19, L20
P-H	5950-773-8948	60 COIL, RADIOFREQUENCY: MS75008-21 (96906)	2	EA	2				*	2	2	13	16	5-15A	L19, L20
P-H	5950-754-9896	61 COIL, RADIOFREQUENCY: SAME AS 16	1	EA	2				REF	REF	REF	REF	REF	5-15	L21, L22
P-H	5950-053-8245	62 COIL, RADIOFREQUENCY: SAME AS 17	2	EA	2				REF	REF	REF	REF	REF	5-15A	L21, L22
P-H	5905-814-7578	63 RESISTOR, FIXED, FILM: RL20S750J (81349)	1,2	EA	2				*	*	2	10	6	5-15	R45, R61
P-H	5905-766-8364	64 RESISTOR, FIXED, FILM: RL20S361J (81349)	1,2	EA	2				*	*	2	10	6	5-15	R46, R62
P-H	5905-951-1478	65 RESISTOR, FIXED, FILM: SAME AS 28	1,2	EA	2				REF	REF	REF	REF	REF	5-15	R47, R63
P-H	5905-802-6730	66 RESISTOR, FIXED, COMPOSITION:	1	EA	2				*	*	2	10	6	5-15	R48, R64
		RC07GF470J (81349)	2	EA	2				2	3	6	69	80	5-15	R48, R64
P-H	5905-553-9299	67 RESISTOR, FIXED, FILM: RN75B3011F (81349)	1,2	EA	4				*	2	2	16	12	5-15	R49, R51, R65, R66
P-H	5905-503-9138	68 RESISTOR, FIXED, FILM: RN70B1503F (81349)	1	EA	4				*	2	2	16	12	5-15	R50, R52, R67, R68
P-H	5905-062-1496	69 RESISTOR, FIXED, FILM: RN70C1493D (81349)	2	EA	4				*	2	2	16	12	5-15A	R50, R52, R67, R68
P-H	5905-683-2246	70 RESISTOR, FIXED, COMPOSITION: RC07GF473K (81349)	1,2	EA	2				*	2	2	16	12	5-15	R53, R69
P-H	5905-902-0676	71 RESISTOR, FIXED, FILM: RL20S113J (81349)	1,2	EA	1				*	*	*	5	4	5-15	R54
P-H	5905-069-9928	72 RESISTOR, FIXED, FILM: RN70D5112F (81349)	1,2	EA	2				*	*	2	11	6	5-15	R55, R70
P-H	5905-078-8756	73 RESISTOR, FIXED, FILM: RN70D6492F (81349)	1,2	EA	2				*	*	2	10	6	5-15A	R56, R71
P-H	5905-683-7721	74 RESISTOR, FIXED, COMPOSITION:	1	EA	2				*	2	2	13	10	5-15	R77, R83
		RCQ7GF101J (81349)	2	EA	4				*	2	2	21	20	5-15	R77, R83
														5-15A	R90, R93
P-H	5905-817-7971	75 RESISTOR, FIXED, COMPOSITION: RC07GF100J (81349)	1,2	EA	4				2	2	3	40	36	5-15	R78, R79, R84, R85
P-H	5905-933-3787	76 RESISTOR, FIXED, FILM: RL32AD571J (81349)	1	EA	2				*	*	2	10	6	5-15	R80, R86
P-H	5905-814-8413	77 RESISTOR, FIXED, FILM: RL32S561J (81349)	2	EA	2				*	*	2	10	6	5-15A	R80, R86
P-H	5905-715-0770	78 RESISTOR, FIXED, FILM: LP13-502J (14674)	1,2	EA	2				*	2	2	27	24	5-15	R89, R92
P-H	5905-726-6837	79 RESISTOR, FIXED, COMPOSITION: RC07GF681K (81349)	1	EA	2				*	*	2	16	12	5-15	R90, R93

(1) SMR CODE	(2) FEDERAL STOCK NUMBER	(3) DESCRIPTION REFERENCE NUMBER & MFR. CODE		USABLE ON CODE	(4) UNIT OF MEAS	(5) QTY INC IN UNIT	(6) 30-DAY DS MAINT ALLOWANCE (a) 1-20	(b) 21-50	(c) 51-100	(7) 30-DAY GS MAINT ALLOWANCE (a) 1-20	(b) 21-50	(c) 51-100	(8) 1 YR ALW PER EQUIP CNTGCY	(9) DEPOT MAINT ALW PER 100 EQUIP	(10) ILLUSTRATIONS (a) FIG NO.	(b) ITEM NO. OR REFERENCE DESIGNATION
P-H	5905-767-3220	81	RESISTOR, FIXED, FILM: RL20S222J (81349)	1,2	EA	2				*	*	2	10	6	5-15	R91,R94
P-H	5905-774-8125	82	RESISTOR, FIXED, FILM: RL20S183J (81349)	1,2	EA	1				*	*	*	5	4	5-15	R97
P-H	5905-767-3204	83	RESISTOR, FIXED, FILM: RL20S104J (81349)	1,2	EA	1				*	*	2	10	6	5-15	R98
P-H	5960-806-5614	84	ELECTRON TUBE: SAME AS 42	1,2	EA	6				REF	REF	REF	REF	REF	5-15	V6,V7,V10 thru V13
P-H	6240-539-8959	85	LAMP, GLOW: SM-C-189591 (80063)	1,2	EA	2				2	4	8	107	800	5-15	V8,V9
P-H	5935-849-9455	86	SOCKET, ELECTRON TUBE: SAME AS 45	1,2	EA	3				REF	REF	REF	REF	REF	5-15	XV6,XV12,XV13
P-H	5935-808-9569	87	SOCKET, ELECTRON TUBE: SAME AS 43	1	EA	3				REF	REF	REF	REF	REF	5-15	XV7,XV10,XV11
P-H	5935-990-2827	88	SOCKET, ELECTRON TUBE: SAME AS 44	2	EA	3				REF	REF	REF	REF	REF	5-15A	XV7,XV10,XV11
A-H		89	SCANNER OUTPUT ETCHED CIRCUIT ASSEMBLY: 170A-65T(N) (28480)	1	EA	1									5-16	A3
A-H		90	SCANNER OUPUT ETCHED CIRCUIT ASSEMBLY: 2420-739 (28569)	2	EA	1									5-16	A3
P-H	5910-578-1623	91	CAPACITOR, VARIABLE, CERAMIC DIELECTRIC: CV11C450 (81349)	1,2	EA	2				2	2	3	40	18	5-16	C28,C29
P-H	5905-557-2422	92	RESISTOR, FIXED, FILM:	1	EA	4				*	2	2	28	32	5-16	R75,R76,R81,R82
			RN75B4991F (81349)	2	EA	4				*	2	2	16	12	5-16	R75,R76,R81,R82
A-H		93	SWEEP MODE/TRIGGER SOURCE SWITCH ASSEMBLY: 170A-19E(N) (28480)	1	EA	1									5-19	A100
A-H		94	SWEEP MODE/TRIGGER SOURCE SWITCH ASSEMBLY: 19915-676 (28569)	2	EA	1									5-19	A100
P-H	5910-993-8367	95	CAPACITOR, FIXED, CERAMIC DIELECTRIC: SAME AS 10	1,2	EA	1				REF	REF	REF	REF	REF	5-19	C101
P-H	5910-822-5682	96	CAPACITOR, FIXED, CERAMIC DIELECTRIC: CK62BX102K (81349)	1,2	EA	1				*	2	2	18	9	5-19	C130
P-H	5905-254-9201	97	RESISTOR, FIXED, COMPOSITION: RC20GF473J (81349)	1,2	EA	2				*	2	2	21	18	5-19	R101,R164
P-H	5905-185-8510	98	RESISTOR, FIXED, COMPOSITION: RC20GF103J (81349)	1,2	EA	1				*	2	2	13	9	5-19	R102
P-H	5905-171-2004	99	RESISTOR, FIXED, COMPOSITION: RC20GF223J (81349)	1,2	EA	1				*	*	2	10	6	5-19	R161
P-H	5905-793-2176	100	RESISTOR, VARIABLE: 16925-405 (28569)	2	EA	1				*	*	*	5	3	5-19	R162
P-H	5930-757-3076	101	SWITCH, ROTARY: 3100-0783-9 (28480)	1	EA	1				*	*	2	10	6	5-19	S101
P-H	5930-960-0159	102	SWITCH, ROTARY: PPA022-2274 (71590)	2	EA	1				*	*	2	10	6	5-19	S101
A-H		103	SWEEP GENERATOR ETCHED CIRCUIT ASSEMBLY: 170A-65P(N) (28480)	1	EA	1									5-17	A101
A-H		104	SWEEP GENERATOR ETCHED CIRCUIT ASSEMBLY: 2420-734 (28569)	2	EA	1									5-17A	A101
P-H	5910-823-1068	105	CAPACITOR, FIXED, CERAMIC DIELECTRIC: SAME AS 50	1,2	EA	1				REF	REF	REF	REF	REF	5-17	C102
P-H	5910-825-4546	106	CAPACITOR, FIXED, MICA DIELECTRIC: CM15D241JN3 (81349)	1,2	EA	1				*	*	2	8	3	5-17	C105
P-H	5910-822-5682	107	CAPACITOR, FIXED, CERAMIC DIELECTRIC: SAME AS 96	1,2	EA	3				REF	REF	REF	REF	REF	5-17	C106,C123,C136

(1) SMR CODE	(2) FEDERAL STOCK NUMBER	(3) DESCRIPTION REFERENCE NUMBER & MFR. CODE	USABLE ON CODE	(4) UNIT OF MEAS	(5) QTY INC IN UNIT	(6) 30-DAY DS MAINT ALLOWANCE (a) 1-20	(b) 21-50	(c) 51-100	(7) 30-DAY GS MAINT ALLOWANCE (a) 1-20	(b) 21-50	(c) 51-100	(8) 1 YR ALW PER EQUIP CNTGCY	(9) DEPOT MAINT ALW PER 100 EQUIP	(10) ILLUSTRATIONS (a) FIG NO.	(b) ITEM NO. OR REFERENCE DESIGNATION
P-H	5910-892-7395	108 CAPACITOR, FIXED, MICA DIELECTRIC: CM15C330JN3 (81349)	1,2	EA	1				2	2	3	33	21	5-17	C107
P-H	5910-823-1203	109 CAPACITOR, FIXED, MICA DIELECTRIC: CM15C750JN3 (81349)	1,2	EA	1				*	*	2	8	3	5-17	C108
P-H	5910-816-6613	110 CAPACITOR, FIXED, MICA DIELECTRIC: SAME AS 52	2	EA	2				REF	REF	REF	REF	REF	5-17	C109,C143
P-H	5910-727-3554	111 CAPACITOR, FIXED, MICA	1	EA	1				*	*	2	8	3	5-17	C134
		DIELECTRIC: CM15B100KN3 (81349)	2	EA	2				*	*	2	10	6	5-17A	C109,C134
P-H	5910-543-0823	112 CAPACITOR, FIXED, CERAMIC DIELECTRIC: CC20CK020C (81349)	1,2	EA	1				2	2	3	33	18	5-17	C110
P-H	5910-717-0169	113 CAPACITOR, FIXED, MICA DIELECTRIC: CM15F101G03 (81349)	1,2	EA	1				*	2	2	18	9	5-17	C114
P-H	5910-993-8367	114 CAPACITOR, FIXED, CERAMIC DIELECTRIC: SAME AS 10	1,2	EA	9				REF	REF	REF	REF	REF	5-17	C116,C118,C122,C135 C137,C139thruC142
P-H	5910-543-0821	115 CAPACITOR, FIXED, CERAMIC DIELECTRIC: CC20CH150G (81349)	1,2	EA	1				*	*	2	8	3	5-17	C117
P-H	5910-826-5466	116 CAPACITOR, FIXED, MICA DIELECTRIC: CM15D221JN3 (81349)	1,2	EA	1				*	*	2	8	3	5-17	C119
P-H	5910-556-9440	117 CAPACITOR, VARIABLE, CERAMIC DIELECTRIC: CV11A070 (81349)	1,2	EA	1				*	2	2	13	6	5-17	C121
P-H	5910-807-9305	118 CAPACITOR, FIXED, MICA DIELECTRIC: CM15D471JN3 (81349)	1	EA	1				*	2	2	13	6	5-17A	C124
P-H	5910-088-0385	119 CAPACITOR, FIXED, MICA DIELECTRIC: CM15D391JN3 (81349)	1,2	EA	1				*	*	2	8	3	5-17	C132
P-H	5910-807-2595	120 CAPACITOR, FIXED, MICA	2	EA	2				*	*	2	10	6	5-17A	C124,C133
		DIELECTRIC: CM15C680JN3 (81349)	1	EA	1				*	2	2	13	9	5-17	C133
P-H	5910-934-0327	121 CAPACITOR, FIXED, CERAMIC DIELECTRIC: SAME AS 11	1	EA	1				REF	REF	REF	REF	REF	5-17	C138
P-H	5910-993-8367	122 CAPACITOR, FIXED, CERAMIC DIELECTRIC: SAME AS 10	2	EA	1				REF	REF	REF	REF	REF	5-17A	C138
P-H	5961-082-4201	123 SEMICONDUCTOR DEVICE, DIODE: 1N4363 (81349)	1,2	EA	1				*	*	2	8	3	5-17	CR101
P-H	5961-814-0768	124 SEMICONDUCTOR DEVICE, DIODE: 1N3064 (81349)	1,2	EA	1				2	2	3	33	21	5-17	CR102
P-H	5961-852-7549	125 SEMICONDUCTOR DEVICE, DIODE: 1N754A (81349)	1,2	EA	1				*	2	2	18	9	5-17	CR103
P-H	5961-082-4202	126 SEMICONDUCTOR DEVICE, DIODE: 1N4375 (81349)	1,2	EA	1				*	*	2	8	3	5-17	CR104
P-H	5950-802-1805	127 COIL, RADIOFREQUENCY: MS75008-8 (81349)	1	EA	1				*	*	2	8	3	5-17	L101
P-H	5950-059-3904	128 COIL, RADIOFREQUENCY: MS75008-32 (81349)	2	EA	1				*	*	2	8	3	5-17A	L101
P-H	5950-052-0748	129 COIL, RADIOFREQUENCY: MS75008-44 (81349)	1,2	EA	2				*	2	2	13	6	5-17	L102,L103
P-H	5905-279-3513	130 RESISTOR, FIXED, COMPOSITION:	1	EA	1				*	2	2	16	12	5-17	R107
		RC20GF221J (81349)	2	EA	1				*	2	2	31	30	5-17	R107
P-H	5905-279-1898	131 RESISTOR, FIXED, COMPOSITION: RC20GF560K (81349)	1	EA	18				2	3	6	77	81	5-17	R108,R117,R122,R124 R136,R140,R143,R150 R151,R154,R155,R167 R173,R175,R181,R186 R187,R189
P-H	5905-195-5571	132 RESISTOR, FIXED, COMPOSITION: RC20GF680J (81349)	2	EA	1				*	*	*	5	3	5-17A	R108

(1) SMR CODE	(2) FEDERAL STOCK NUMBER	(3) DESCRIPTION REFERENCE NUMBER & MFR. CODE	USABLE ON CODE	(4) UNIT OF MEAS	(5) QTY INC IN UNIT	(6) 30-DAY DS MAINT ALLOWANCE (a) 1-20	(b) 21-50	(c) 51-100	(7) 30-DAY GS MAINT ALLOWANCE (a) 1-20	(b) 21-50	(c) 51-100	(8) 1 YR ALW PER EQUIP CNTGCY	(9) DEPOT MAINT ALW PER 100 EQUIP	(10) ILLUSTRATIONS (a) FIG NO.	(b) ITEM NO. OR REFERENCE DESIGNATION
P-H	5905-804-6099	133 RESISTOR, FIXED, FILM: LP15-303K (14674)	1,2	EA	1				*	2	2	13	9	5-17	R109
P-H	5905-717-3343	134 RESISTOR, FIXED, FILM: RL32S332J (81349)	1,2	EA	1				*	*	*	5	3	5-17	R110
P-H	5905-299-1541	135 RESISTOR, FIXED, COMPOSITION: SAME AS 30	1,2	EA	2				REF	REF	REF	REF	REF	5-17	R111,R112
P-H	5905-769-8533	136 RESISTOR, FIXED, FILM: SAME AS 25	1,2	EA	1				REF	REF	REF	REF	REF	5-17	R113
P-H	5905-192-0390	137 RESISTOR, FIXED, COMPOSITION: SAME AS 24	1,2	EA	2				REF	REF	REF	REF	REF	5-17	R115,R133
P-H	5905-279-2515	138 RESISTOR, FIXED, COMPOSITION: RC20GF474J (81349)	1,2	EA	3				*	2	2	19	15	5-17	R116,R137,R157
P-H	5905-252-4018	139 RESISTOR, FIXED, COMPOSITION: SAME AS 23	2	EA	17				REF	REF	REF	REF	REF	5-17	R117,R122,R124, R136,R140,R143, R150,R151,R154, R155,R167,R173, R175,R181,R186, R187,R189
P-H	5905-556-3339	140 RESISTOR, FIXED, FILM: RN70B6980F (81349)	1,2	EA	1				*	*	*	5	3	5-17	R118
P-H	5905-069-4508	141 RESISTOR, FIXED, FILM: RN70D2493F (81349)	1,2	EA	2				*	*	2	10	6	5-17	R119,R141
P-H	5905-722-0054	142 RESISTOR, FIXED, FILM: LP14-113J (16299)	1,2	EA	1				*	*	*	5	3	5-17	R120
P-H	5905-884-0788	143 RESISTOR, FIXED, FILM: RN70D4993F (81349)	1 2	EA EA	3 1				* *	2 *	2 *	12 5	15 3	5-17 5-17	R121,R148,R149 R121
P-H	5905-279-1757	144 RESISTOR, FIXED, COMPOSITION: RC20GF152J (81349)	1 2	EA EA	2 1				* *	* *	2 2	10 12	6 9	5-17 5-17A	R123,R125 R123
P-H	5905-249-4195	145 RESISTOR, FIXED, COMPOSITION: RC20GF752J (81349)	2	EA	1				*	*	*	5	3	5-17A	R125
P-H	5905-804-6100	146 RESISTOR, FIXED, FILM: LP15-123J (14674)	1,2	EA	1				*	*	*	5	3	5-17	R130
P-H	5905-852-4476	147 RESISTOR, FIXED, FILM: LP15-153J (14674)	1,2	EA	1				*	*	*	5	3	5-17	R131
P-H	5905-279-1876	148 RESISTOR, FIXED, COMPOSITION: SAME AS 32	1,2	EA	1				REF	REF	REF	REF	REF	5-17	R132
P-H	5905-192-0626	149 RESISTOR, FIXED, COMPOSITION: RC42GF123K (81349)	1	EA	2				*	2	2	12	15	5-17	R135,R138
P-H	5905-171-1976	150 RESISTOR, FIXED, COMPOSITION: RC42GF153J (81349)	1 2	EA EA	1 3				* *	* 2	* 2	8 21	5 30	5-17 5-17A	R179 R135,R138,R179
P-H	5905-892-6479	151 RESISTOR, FIXED, FILM: RN70D1003F (81349)	1,2	EA	2				*	*	2	10	6	5-17	R139,R170
P-H	5905-782-0901	152 RESISTOR, FIXED, FILM: RL42S512J (81349)	1,2	EA	1				*	*	*	5	3	5-17	R142
P-H	5905-195-6752	153 RESISTOR, FIXED, COMPOSITION: RC42GF392J (81349)	1 2	EA EA	1 0				* *	2 *	2 *	13 5	9 3	5-17	R144
P-H	5905-257-0937	154 RESISTOR, FIXED, COMPOSITION: RC42GF472J (81349)	1 2	EA EA	0 1				* *	* 2	2 2	10 13	16 19	5-17A	R144
P-H	5905-279-2303	155 RESISTOR, FIXED, COMPOSITION: RC42GF562K (81349)	1	EA	1				*	*	2	10	6	5-17	R145
P-H	5905-279-2528	156 RESISTOR, FIXED, COMPOSITION: RC42GF682J (81349)	2	EA	1				*	*	*	5	3	5-17A	R145
P-H	5905-581-1645	157 RESISTOR, FIXED, FILM: RN70B1651F (81349)	1	EA	1				*	*	*	5	3	5-17	R146
P-H	5905-062-0539	158 RESISTOR, FIXED, FILM: RN70D1621F (81349)	2	EA	1				*	*	*	5	3	5-17A	R146
P-H	5905-279-3494	159 RESISTOR, FIXED, COMPOSITION: RC20GF823J (81349)	1,2	EA	1				*	*	*	5	3	5-17	R147

(1) SMR CODE	(2) FEDERAL STOCK NUMBER	(3) DESCRIPTION REFERENCE NUMBER & MFR. CODE	USABLE ON CODE	(4) UNIT OF MEAS	(5) QTY INC IN UNIT	(6) 30-DAY DS MAINT ALLOWANCE (a) 1-20	(b) 21-50	(c) 51-100	(7) 30-DAY GS MAINT ALLOWANCE (a) 1-20	(b) 21-50	(c) 51-100	(8) 1 YR ALW PER EQUIP CNTGCY	(9) DEPOT MAINT ALW PER 100 EQUIP	(10) ILLUSTRATIONS (a) FIG NO.	(b) ITEM NO. OR REFERENCE DESIGNATION
P-H	5905-936-1537	160 RESISTOR, FIXED, FILM: RN70C5053D (81349)	2	EA	2				*	*	2	10	6	5-17A	R148,R149
P-H	5905-975-4358	161 RESISTOR, FIXED, FILM: RL42S183J (81349)	1	EA	1				*	*	*	5	3	5-17	R152
P-H	5905-721-4363	162 RESISTOR, FIXED, FILM: LP14-38K-10% (14674)	2	EA	1				*	*	*	5	3	5-17A	R152
P-H	5905-195-6799	163 RESISTOR, FIXED, COMPOSITION: RC20GF561K (81349)	1	EA	1				*	*	*	10	6	5-17	R153
P-H	5905-192-3973	164 RESISTOR, FIXED, COMPOSITION: SAME AS 27	2	EA	1				REF	REF	REF	REF	REF	5-17A	R153
P-H	5905-279-1754	165 RESISTOR, FIXED, COMPOSITION: RC20GF155J (81349)	1,2	EA	1				*	2	2	19	18	5-17	R156
P-H	5905-195-6741	166 RESISTOR, FIXED, COMPOSITION: RC20GF272K (81349)	1	EA	1				*	2	2	16	12	5-17	R158
P-H	5905-279-1876	167 RESISTOR, FIXED, COMPOSITION: SAME AS 32	2	EA	1				REF	REF	REF	REF	REF	5-17A	R158
P-H	5905-299-2025	168 RESISTOR, FIXED, COMPOSITION: RC32GF153K (81349)	1 2	EA EA	1 0				* *	* *	2 2	10 10	6 6	5-17	R159
P-H	5905-079-4448	169 RESISTOR, FIXED, FILM: RL42S203J (81349)	1	EA	1				*	*	*	5	3	5-17	R160
P-H	5905-259-2990	170 RESISTOR, FIXED, COMPOSITION: RC20GF226J (81349)	1,2	EA	1				*	*	*	5	3	5-17	R165
P-H	5905-192-0662	171 RESISTOR, FIXED, COMPOSITION: RC20GF184K (81349)	1	EA	1				*	2	2	13	9	5-17	R168
P-H	5905-192-0667	172 RESISTOR, FIXED, COMPOSITION: RC20GF224J (81349)	1 2	EA EA	0 1				* *	* *	* 2	5 10	3 6	5-23 5-17A	R258 R168
P-H	5905-556-4003	173 RESISTOR, FIXED, FILM: RN75B2552F (81349)	1	EA	1				*	2	2	13	9	5-17	R169
P-H	5905-054-0399	174 RESISTOR, FIXED, FILM: RN70C2522D (81349)	2	EA	1				*	*	*	5	3	5-17A	R169
P-H	5905-552-0614	175 RESISTOR, FIXED, FILM: RN75B1742F (81349)	1	EA	1				*	*	*	5	3	5-17	R171
P-H	5905-936-1539	176 RESISTOR, FIXED, FILM: RN75C1722D (81349)	2	EA	1				*	*	*	5	3	5-17A	R171
P-H	5905-195-6806	177 RESISTOR, FIXED, COMPOSITION: SAME AS 34	1,2	EA	1				REF	REF	REF	REF	REF	5-14	R172
P-H	5905-989-5579	178 RESISTOR, FIXED, FILM: RN65D7152F (81349)	1,2	EA	1				*	*	*	5	3	5-17	R174
P-H	5905-171-2004	179 RESISTOR, FIXED, COMPOSITION: SAME AS 99	1,2	EA	1				REF	REF	REF	REF	REF	5-17	R176
P-H	5905-279-2616	180 RESISTOR, FIXED, COMPOSITION: RC20GF153J (81349)	1,2	EA	1				*	*	*	5	3	5-17	R177
P-H	5905-171-1986	182 RESISTOR, FIXED, COMPOSITION: RC20GF563J (81349)	1	EA	1				*	2	2	19	15	5-17	R180
P-H	5905-767-7594	183 RESISTOR, FIXED, FILM: RL20S563J (81349)	2	EA	1				*	2	2	21	20	5-17A	R180
P-H	5905-249-4227	184 RESISTOR, FIXED, COMPOSITION: RC42GF183K (81349)	1	EA	1				*	*	*	5	3	5-17	R182
P-H	5905-279-2527	185 RESISTOR, FIXED, COMPOSITION: RC42GF223J (81349)	2	EA	1				*	*	*	5	3	5-17A	R182
P-H	5905-190-8889	186 RESISTOR, FIXED, COMPOSITION: RC20GF101J (81349)	1,2	EA	2				*	2	2	16	12	5-17	R188,R190
P-H	6240-539-8959	187 LAMP, GLOW: SAME AS 85	1,2	EA	4				REF	REF	REF	REF	REF	5-17	V102,V110,V11,V116
P-H	5935-808-9569	188 SOCKET, ELECTRON, TUBE: SAME AS 43	1	EA	9				REF	REF	REF	REF	REF	5-17	XV101,XV103,XV104, XV105,XV107,XV109, XV113,XV114,XV115

SECTION V. REPAIR PARTS FOR DIRECT SUPPORT, GENERAL SUPPORT, AND DEPOT MAINTENANCE (CONTINUED)

(1) SMR CODE	(2) FEDERAL STOCK NUMBER	(3) DESCRIPTION REFERENCE NUMBER & MFR. CODE		USABLE ON CODE	(4) UNIT OF MEAS	(5) QTY INC IN UNIT	(6) 30-DAY DS MAINT ALLOWANCE (a) 1-20	(b) 21-50	(c) 51-100	(7) 30-DAY GS MAINT ALLOWANCE (a) 1-20	(b) 21-50	(c) 51-100	(8) 1 YR ALW PER EQUIP CNTGCY	(9) DEPOT MAINT ALW PER 100 EQUIP	(10) ILLUSTRATIONS (a) FIG NO.	(b) ITEM NO. OR REFERENCE DESIGNATION
P-H	5935-990-2827	189	SOCKET, ELECTRON TUBE: SAME AS 44	2	EA	9				REF	REF	REF	REF	REF	5-17A	XV101,XV103,XV104, XV105,XV107,XV109, XV113,XV114,XV115
A-H		190	TRIGGER LEVEL/TRIGGER SLOPE SWITCH ASSEMBLY: 170A-19D(N) (28480)	1	EA	1									5-20	A103
A-H		191	TRIGGER LEVEL/TRIGGER SLOPE SWITCH ASSEMBLY: 19915-675 (28569)	2	EA	1									5-20	A103
P-H	5910-822-5682	192	CAPACITOR, FIXED, CERAMIC DIELECTRIC: SAME AS 96	1,2	EA	1				REF	REF	REF	REF	REF	5-20	C103
P-H	5910-993-8367	193	CAPACITOR, FIXED, CERAMIC DIELECTRIC: SAME AS 10	1,2	EA	1				REF	REF	REF	REF	REF	5-20	C104
P-H	5905-192-0390	194	RESISTOR, FIXED, COMPOSITION: SAME AS 24	1,2	EA	1				REF	REF	REF	REF	REF	5-20	R103
P-H	5905-279-2515	195	RESISTOR, FIXED, COMPOSITION: SAME AS 138	1,2	EA	1				REF	REF	REF	REF	REF	5-20	R104
P-H	5905-254-9201	196	RESISTOR, FIXED, COMPOSITION: SAME AS 97	1,2	EA	1				REF	REF	REF	REF	REF	5-20	R106
P-H	5930-757-3077	197	SWITCH, ROTARY: 3100-0782-9 (28480)	1	EA	1				*	*	2	10	6	5-20	S102
P-H	5930-960-0158	198	SWITCH, ROTARY: PP033-058 (71590)	2	EA	1				*	*	2	10	6	5-20	S102
A-H		199	EXTERNAL VERNIER/HORIZONTAL DISPLAY SWITCH ASSEMBLY: 170A-19A(N) (28480)	1	EA	1									5-21	A200
A-H		200	EXTERNAL VERNIER/HORIZONTAL DISPLAY SWITCH ASSEMBLY: 19915-672 (28569)	2	EA	1									5-21A	A200
P-H	5910-728-2144	201	CAPACITOR, FIXED, PLASTIC DIELECTRIC: 27 (01295)	1	EA	1				2	2	3	30	18	5-21	C202
P-H	5910-976-3686	202	CAPACITOR, FIXED, PLASTIC DIELECTRIC: S92684 (56289)	2	EA	1				2	2	3	30	18	5-21A	C202
P-H	5905-793-3064	203	RESISTOR, VARIABLE:	1	EA	1				*	*	*	5	3	5-21	R209
			RGC-90 (71450)	2	EA	1				*	*	*	5	3	5-21A	R209
P-H	5905-299-2049	205	RESISTOR, FIXED, COMPOSITION: RC32GF561K (81349)	1	EA	1				*	*	*	5	3	5-21	R210
P-H	5905-814-8413	206	RESISTOR, FIXED, FILM: SAME AS 77	2	EA	1				REF	REF	REF	REF	REF	5-21A	R210
P-H	5905-078-8810	207	RESISTOR, FIXED, FILM: RN70D1182F (81349)	1,2	EA	1				*	*	2	10	6	5-21	R233
P-H	5905-957-0446	208	RESISTOR, FIXED, FILM: RN70C3611D (81349)	1,2	EA	1				*	*	*	5	3	5-21	R234
P-H	5905-752-7300	209	RESISTOR, FIXED, FILM: RN70B2121F (81349)	1,2	EA	1				*	*	*	5	3	5-21	R235
P-H	5905-990-9556	210	RESISTOR, FIXED, FILM: RN70C9200D (81349)	1,2	EA	1				*	*	*	5	3	5-21	R236
P-H	5905-782-0269	211	RESISTOR, FIXED, FILM: RN70D3650F (81349)	1,2	EA	2				*	*	2	10	6	5-21	R237,R242
P-H	5905-078-6916	212	RESISTOR, FIXED, FILM: RN70D1210F (81349)	1,2	EA	4				*	2	2	16	12	5-21	R238 thru R241
P-H	5905-279-3527	213	RESISTOR, FIXED, COMPOSITION: RC42GF470J (81349)	1,2	EA	1				*	*	*	5	3	5-21	R1023
P-H	5930-757-3078	214	SWITCH ROTARY: 3100-0781-9 (28480)	1	EA	1				*	*	2	10	4	5-21	S202
X1		215	SWITCH, ROTARY: 19912-527 (28569)	2	EA	1									5-21	S202
M-D		216	TERMINAL BOARD: 610 (06540)	1	EA	1									5-21	TB201

(1) SMR CODE	(2) FEDERAL STOCK NUMBER	(3) DESCRIPTION REFERENCE NUMBER & MFR. CODE	USABLE ON CODE	(4) UNIT OF MEAS	(5) QTY INC IN UNIT	(6) 30-DAY DS MAINT ALLOWANCE (a) 1-20	(b) 21-50	(c) 51-100	(7) 30-DAY GS MAINT ALLOWANCE (a) 1-20	(b) 21-50	(c) 51-100	(8) 1 YR ALW PER EQUIP CNTGCY	(9) DEPOT MAINT ALW PER 100 EQUIP	(10) ILLUSTRATIONS (a) FIG NO.	(b) ITEM NO. OR REFERENCE DESIGNATION
A-H		217 HORIZONTAL SENSITIVITY ADJUSTMENT ETCHED CIRCUIT ASSEMBLY: 170A-65R(N) (28480)	1	EA	1									5-22	A201
A-H		218 HORIZONTAL SENSITIVITY ADJUSTMENT ETCHED CIRCUIT ASSEMBLY: 2420-741 (28569)	2	EA	1									5-22A	A201
P-H	5910-578-1623	219 CAPACITOR, VARIABLE, CERAMIC DIELECTRIC: SAME AS 91	1,2	EA	2				REF	REF	REF	REF	REF	5-22	C201,C207
P-H	5910-556-9440	220 CAPACITOR, VARIABLE, CERAMIC DIELECTRIC: SAME AS 117	1,2	EA	1				REF	REF	REF	REF	REF	5-22	C204
P-H	5910-816-6613	221 CAPACITOR, FIXED, MICA DIELECTRIC: SAME AS 52	1,2	EA	1				REF	REF	REF	REF	REF	5-22	C205
P-H	5905-884-0788	222 RESISTOR, FIXED, FILM: SAME AS 143	1	EA	2				REF	REF	REF	REF	REF	5-22	R201,R213
P-H	5905-936-1537	223 RESISTOR, FIXED, FILM: SAME AS 160	2	EA	2				REF	REF	REF	REF	REF	5-22A	R201,R213
P-H	5905-518-5609	224 RESISTOR, VARIABLE: RV4LAYSA105A (81349)	1,2	EA	2				*	2	2	13	9	5-22	R202,R212
P-H	5905-985-6059	225 RESISTOR, FIXED, FILM: RN65C8983D (81349)	1,2	EA	1				*	2	2	13	9	5-22	R203
P-H	5905-990-5020	226 RESISTOR, FIXED, FILM: RN65C1103F (81349)	1,2	EA	1				*	2	2	16	12	5-22	R204
A-H		227 MAIN HORIZONTAL AMPLIFIER AND DRIVER ETCHED CIRCUIT ASSEMBLY: 170A-65L(N) (28480)	1	EA	1									5-23	A202
A-H		228 MAIN HORIZONTAL AMPLIFIER AND DRIVER ETCHED CIRCUIT ASSEMBLY: 2420-740 (28569)	2	EA	1									5-23A	A202
P-H	5910-578-1623	229 CAPACITOR, VARIABLE, CERAMIC DIELECTRIC: SAME AS 91	1,2	EA	2				REF	REF	REF	REF	REF	5-23	C211,C213
P-H	5910-867-0118	230 CAPACITOR, ADJUSTABLE, CERAMIC DIELECTRIC: 19290-60 (28569)	1,2	EA	2				*	2	2	16	6	5-23	C212,C214
P-H	5910-807-5570	231 CAPACITOR, FIXED, PAPER DIELECTRIC: CP05A1KE104K3 (81349)	1,2	EA	1				*	2	2	18	9	5-23	C215
P-H	5910-578-5543	232 CAPACITOR, VARIABLE, CERAMIC DIELECTRIC: SAME AS 51	1,2	EA	1				REF	REF	REF	REF	REF	5-23	C216
P-H	5910-879-4764	233 CAPACITOR, FIXED, PAPER DIELECTRIC: CP09A1KF104K3 (81349)	1,2	EA	1				*	*	2	8	3	5-23	C222
P-H	5950-809-4459	234 COIL, RADIOFREQUENCY: TB-5500-I (95265)	1,2	EA	2				*	2	2	13	6	5-23	L201,L202
P-H	5961-062-2320	235 TRANSISTOR: 2N2084 (81349)	1,2	EA	2				2	2	3	30	18	5-23	Q201,Q202
P-H	5905-195-6761	236 RESISTOR, FIXED, COMPOSITION: RC20GF104J (81349)	1,2	EA	2				*	2	2	19	15	5-23	R244,R264
P-H	5905-681-5979	237 RESISTOR, FIXED, FILM: RN70B3092F (81349)	1	EA	2				*	*	2	10	6	5-23	R245,R259
P-H	5905-936-1536	238 RESISTOR, FIXED, FILM: RN70C3052D (81349)	2	EA	2				*	*	2	10	6	5-23A	R245,R259
P-H	5905-552-5136	239 RESISTOR, FIXED, FILM: RN75B8062F (81349)	2	EA	2				*	*	2	10	6	5-23	R246,R260
P-H	5905-916-7727	240 RESISTOR, FIXED, FILM: RN75C7962D (81349)	2	EA	2				*	*	2	10	6	5-23A	R246,R260
P-H	5905-990-5020	241 RESISTOR, FIXED, FILM: SAME AS 226	1,2	EA	1				REF	REF	REF	REF	REF	5-23	R247
P-H	5905-556-4003	242 RESISTOR, FIXED, FILM: SAME AS 173	1	EA	2				REF	REF	REF	REF	REF	5-23	R248,R251

(1) SMR CODE	(2) FEDERAL STOCK NUMBER	(3) DESCRIPTION REFERENCE NUMBER & MFR. CODE	USABLE ON CODE	(4) UNIT OF MEAS	(5) QTY INC IN UNIT	(6) 30-DAY DS MAINT ALLOWANCE (a) 1-20	(b) 21-50	(c) 51-100	(7) 30-DAY GS MAINT ALLOWANCE (a) 1-20	(b) 21-50	(c) 51-100	(8) 1 YR ALW PER EQUIP CNTGCY	(9) DEPOT MAINT ALW PER 100 EQUIP	(10) ILLUSTRATIONS (a) FIG NO.	(b) ITEM NO. OR REFERENCE DESIGNATION
P-H	5905-983-5819	243 RESISTOR, FIXED, FILM: RN75C2522D (81349)	2	EA	2				*	2	2	13	10	5-23A	R248,R251
P-H	5905-279-1898	244 RESISTOR, FIXED, COMPOSITION: SAME AS 131	1	EA	6				REF	REF	REF	REF	REF	5-23	R249,R253,R256, R257,R266,R269
P-H	5905-252-4018	245 RESISTOR, FIXED, COMPOSITION: SAME AS 23	2	EA	6				REF	REF	REF	REF	REF	5-23A	R249,R253,R256, R257,R266,R269
P-H	5905-553-2389	246 RESISTOR, FIXED, FILM: RN75B9091F (81349)	1,2	EA	2				*	*	2	10	6	5-23	R250,R252
P-H	5905-185-8516	247 RESISTOR, FIXED, COMPOSITION: RC42GF103J (81349)	1,2	EA	2				*	2	2	13	9	5-23	R254,R255
P-H	5905-192-0667	248 RESISTOR, FIXED, COMPOSITION: SAME AS 172	1,2	EA	1				REF	REF	REF	REF	REF	5-23	R258
P-H	5905-722-0136	249 RESISTOR, FIXED, FILM: LP17-202J (14674)	1,2	EA	1				*	*	*	5	3	5-23	R267
P-H	5905-195-6752	250 RESISTOR, FIXED, COMPOSITION: SAME AS 153	1 2	EA EA	1 1				REF REF	REF REF	REF REF	REF REF	REF REF	5-23 5-23A	R268 R268
P-H	5905-192-3972	251 RESISTOR, FIXED, COMPOSITION: RC20GF391K (81349)	1	EA	1				*	*	*	5	3	5-23	R271
P-H	5905-882-0055	252 RESISTOR, FIXED, COMPOSITION: RL20S391J (81349)	2	EA	1				*	*	*	5	3	5-23	R271
P-H	5905-195-6741	253 RESISTOR, FIXED, COMPOSITION: SAME AS 166	1	EA	1				REF	REF	REF	REF	REF	5-23	R272
P-H	5905-279-1757	254 RESISTOR, FIXED, COMPOSITION: SAME AS 144	2	EA	1				REF	REF	REF	REF	REF	5-23A	R272
P-H	5905-279-3504	255 RESISTOR, FIXED, COMPOSITION: RC20GF472J (81349)	1,2	EA	1				*	*	2	10	6	5-23	R273
P-H	5905-257-0937	256 RESISTOR, FIXED, COMPOSITION: SAME AS 154	1,2	EA	2				REF	REF	REF	REF	REF	5-23	R274,R275
P-H	5905-279-2303	257 RESISTOR, FIXED, COMPOSITION: SAME AS 155	1	EA	1				REF	REF	REF	REF	REF	5-23	R276
P-H	5905-975-4362	258 RESISTOR, FIXED, FILM: RL42S562J (81349)	2	EA	1				*	*	*	5	3	5-23A	R276
P-H	5905-257-0926	259 RESISTOR, FIXED, COMPOSITION: SAME AS 39	1,2	EA	1				REF	REF	REF	REF	REF	5-23	R278
P-H	5935-808-9569	260 SOCKET, ELECTRON TUBE: SAME AS 43	1	EA	5				REF	REF	REF	REF	REF	5-23	XV203 thru XV207
P-H	5935-990-2827	261 SOCKET, ELECTRON TUBE: SAME AS 44	2	EA	5				REF	REF	REF	REF	REF	5-23A	XV203 thru XV207
A-H		262 HORIZONTAL IMPEDANCE MATCHING PREAMPLIFIER ETCHED CIRCUIT ASSEMBLY: 170A-65N(N) (28480)	1	EA	1									5-24	A203
A-H		263 HORIZONTAL IMPEDANCE MATCHING PREAMPLIFIER ETCHED CIRCUIT ASSEMBLY: 2420-742 (28569)	2	EA	1									5-24A	A203
P-H	5910-993-8367	264 CAPACITOR, FIXED, CERAMIC DIELECTRIC: SAME AS 10	1,2	EA	1				REF	REF	REF	REF	REF	5-24	C206
P-H	5910-934-0327	265 CAPACITOR, FIXED, CERAMIC DIELECTRIC: SAME AS 11	1,2	EA	1				REF	REF	REF	REF	REF	5-24	C221
P-H	5905-892-6475	266 RESISTOR, FIXED, FILM: RN65D1004F (81349)	1,2	EA	2				2	2	3	40	36	5-24	R205,R215
P-H	5905-195-6761	267 RESISTOR, FIXED, COMPOSITION: SAME AS 236	1,2	EA	1				REF	REF	REF	REF	REF	5-24	R206
P-H	5905-190-8889	268 RESISTOR, FIXED, COMPOSITION: SAME AS 186	1,2	EA	1				REF	REF	REF	REF	REF	5-24	R207
P-H	5905-192-0626	269 RESISTOR, FIXED, COMPOSITION: SAME AS 149	1	EA	1				REF	REF	REF	REF	REF	5-24	R208

(1) SMR CODE	(2) FEDERAL STOCK NUMBER	(3) DESCRIPTION REFERENCE NUMBER & MFR. CODE		USABLE ON CODE	(4) UNIT OF MEAS	(5) QTY INC IN UNIT	(6) 30-DAY DS MAINT ALLOWANCE (a) 1-20	(b) 21-50	(c) 51-100	(7) 30-DAY GS MAINT ALLOWANCE (a) 1-20	(b) 21-50	(c) 51-100	(8) 1 YR ALW PER EQUIP CNTGCY	(9) DEPOT MAINT ALW PER 100 EQUIP	(10) ILLUSTRATIONS (a) FIG NO.	(b) ITEM NO. OR REFERENCE DESIGNATION
P-H	5905-171-1976	270	RESISTOR, FIXED, COMPOSITION: SAME AS 150	2	EA	1				REF	REF	REF	REF	REF	5-24	R208
P-H	5905-279-1898	271	RESISTOR, FIXED, COMPOSITION: SAME AS 131	1	EA	3				REF	REF	REF	REF	REF	5-24	R214,R218,R224
P-H	5905-252-4018	272	RESISTOR, FIXED, COMPOSITION: SAME AS 23	2	EA	3				REF	REF	REF	REF	REF	5-24A	R214,R218,R224
P-H	5905-249-4243	273	RESISTOR, FIXED, COMPOSITION: RC42GF273K (81349)	1	EA	1				*	*	*	5	3	5-24	R217
P-H	5905-279-2675	274	RESISTOR, FIXED, COMPOSITION: RC42GF333J (81349)	2	EA	1				*	*	*	5	3	5-24A	R217
P-H	5905-804-6098	275	RESISTOR, FIXED, FILM: LP13-822J (14674)	1,2	EA	2				*	*	2	10	6	5-24	R221,R222
P-H	5905-252-4018	276	RESISTOR, FIXED, COMPOSITION: SAME AS 23	1,2	EA	1				REF	REF	REF	REF	REF	5-24	R277
P-H	5935-808-9569	277	SOCKET, ELECTRON TUBE: SAME AS 43	1	EA	2				REF	REF	REF	REF	REF	5-24	XV201,XV202
P-H	5935-990-2827	278	SOCKET, ELECTRON TUBE: SAME AS 44	2	EA	2				REF	REF	REF	REF	REF	5-24A	XV201,XV202
A-H		279	CALIBRATOR SWITCH ASSEMBLY: 170A-19C(N) (28480)	1	EA	1									5-25	A300
A-H		280	CALIBRATOR SWITCH ASSEMBLY: 19915-674 (28569)	2	EA	1									5-25	A300
P-H	5910-760-7924	281	CAPACITOR, FIXED, MICA DIELECTRIC: CM20FD561G03 (81349)	1,2	EA	1				*	*	2	8	3	5-25	C318
P-H	5905-295-3403	282	RESISTOR, FIXED, COMPOSITION: RC20GF225K (81349)	1,2	EA	1				*	*	2	10	6	5-25	R341
P-H	5905-988-0143	283	RESISTOR, FIXED, FILM: RN70D2001F (81349)	1,2	EA	1				*	*	*	5	3	5-25	R343
P-H	5905-078-8810	284	RESISTOR, FIXED, FILM: SAME AS 207	1,2	EA	1				REF	REF	REF	REF	REF	5-25	R344
P-H	5905-993-5987	285	RESISTOR, FIXED, FILM: RN70D6191F (81349)	1,2	EA	1				*	*	*	5	3	5-25	R345
P-H	5905-957-0445	286	RESISTOR, FIXED, FILM: RN70C2031D (81349)	1,2	EA	1				*	*	*	5	3	5-25	R346
P-H	5905-581-7467	287	RESISTOR, FIXED, FILM: RN70B1021F (81349)	1,2	EA	1				*	*	*	5	3	5-25	R347
P-H	5905-954-9088	288	RESISTOR, FIXED, FILM: RN70C5970D (81349)	1,2	EA	2				*	*	*	5	3	5-25	R348
P-H	5905-050-1128	289	RESISTOR, FIXED, FILM: RN70D2000F (81349)	1,2	EA	2				*	*	2	10	6	5-25	R349,R354
P-H	5905-088-5936	290	RESISTOR, FIXED, FILM: RN70D1000F (81349)	1,2	EA	1				*	*	*	5	3	5-25	R350
P-H	5905-734-4730	291	RESISTOR, FIXED, FILM: RN70D60R4F (81349)	1,2	EA	1				*	*	*	5	3	5-25	R351
P-H	5905-762-3660	292	RESISTOR, FIXED, FILM: RN70D40R2F (81349)	1,2	EA	1				*	*	*	5	3	5-25	R352
P-H	5905-993-5953	293	RESISTOR, FIXED, FILM: RN70D2003F (81349)	1,2	EA	1				*	*	*	5	3	5-25	R353
P-H	5930-757-7699	294	SWITCH, ROTARY: 3100-0780-9 (28480)	1	EA	1				*	*	2	10	4	5-25	S302
X1		295	SWITCH, ROTARY: 19912-427 (28569)	2	EA	1									5-25	S302
A-H		296	HIGH VOLTAGE POWER SUPPLY ETCHED CIRCUIT ASSEMBLY: 170A-65J(N) (28480)	1	EA	1									5-26	A301

(1) SMR CODE	(2) FEDERAL STOCK NUMBER	(3) DESCRIPTION REFERENCE NUMBER & MFR. CODE		USABLE ON CODE	(4) UNIT OF MEAS	(5) QTY INC IN UNIT	(6) 30-DAY DS MAINT ALLOWANCE (a) 1-20	(b) 21-50	(c) 51-100	(7) 30-DAY GS MAINT ALLOWANCE (a) 1-20	(b) 21-50	(c) 51-100	(8) 1 YR ALW PER EQUIP CNTGCY	(9) DEPOT MAINT ALW PER 100 EQUIP	(10) ILLUSTRATIONS (a) FIG NO.	(b) ITEM NO. OR REFERENCE DESIGNATION
A-H		297	HIGH VOLTAGE POWER SUPPLY ETCHED CIRCUIT ASSEMBLY: 2420-737 (28569)	2	EA	1									5-26A	A301
P-H	5910-819-5745	298	CAPACITOR, FIXED, PAPER DIELECTRIC: CP05A1KC473K3 (81349)	1,2	EA	1				*	2	2	13	6	5-26	C301
P-H	5910-728-2144	299	CAPACITOR, FIXED, PLASTIC DIELECTRIC: SAME AS 201	1	EA	1				REF	REF	REF	REF	REF	5-26	C302
P-H	5910-976-3686	300	CAPACITOR, FIXED, PLASTIC DIELECTRIC: SAME AS 202	2	EA	1				REF	REF	REF	REF	REF	5-21A	C302
P-H	5910-883-4781	301	CAPACITOR, FIXED, CERAMIC DIELECTRIC: CK63BX222K (81349)	1 2	EA EA	1 0				* *	2 *	2 2	21 10	12 8	5-26	C303
P-H	5910-838-0869	302	CAPACITOR, FIXED, CERAMIC DIELECTRIC: CK63BX332K (81349)	2	EA	1				*	*	*	5	3	5-26A	C303
P-H	5910-851-7794	303	CAPACITOR, FIXED, CERAMIC DIELECTRIC: 29C214A3-H-1038 (56289)	1,2	EA	1				*	*	2	8	3	5-26	C304
P-H	5910-874-6903	304	CAPACITOR, FIXED, CERAMIC DIELECTRIC: 6KV470 (91418)	1,2	EA	1				*	*	2	8	3	5-26	C305
P-H	5910-993-8367	305	CAPACITOR, FIXED, CERAMIC DIELECTRIC: SAME AS 10	1,2	EA	1				REF	REF	REF	REF	REF	5-26	C310
P-H	5910-804-2372	306	CAPACITOR, FIXED, MICA DIELECTRIC: CM15C270JN3 (81349)	1,2	EA	2				*	*	2	13	6	5-26	C316,C317
P-H	5950-802-0913	307	COIL, RADIOFREQUENCY: MS16223-21 (81349)	1	EA	1				*	*	2	13	9	5-26	L301
P-H	5950-880-0347	308	COIL, RADIOFREQUENCY: MS75055-4 (81349)	2	EA	1				*	*	2	13	19	5-26A	L301
P-H	5905-195-6756	309	RESISTOR, FIXED, COMPOSITION: RC42GF563K (81349)	1	EA	1				*	*	*	5	3	5-26	R302
P-H	5905-195-6754	310	RESISTOR, FIXED, COMPOSITION: RC42GF473K (81349)	2	EA	1				*	*	*	5	3	5-26A	R302
P-H	5905-254-7087	311	RESISTOR, FIXED, COMPOSITION: RC20GF683K (81349)	1,2	EA	1				*	*	*	5	3	5-26	R303
P-H	5905-279-2515	312	RESISTOR, FIXED, COMPOSITION: SAME AS 138	1,2	EA	1				REF	REF	REF	REF	REF	5-26	R304
P-H	5905-192-0390	313	RESISTOR, FIXED, COMPOSITION: SAME AS 24	1,2	EA	1				REF	REF	REF	REF	REF	5-26	R305
P-H	5905-279-1898	314	RESISTOR, FIXED, COMPOSITION: SAME AS 131	1	EA	1				REF	REF	REF	REF	REF	5-26	R306
P-H	5905-252-4018	315	RESISTOR, FIXED, COMPOSITION: SAME AS 23	2	EA	1				REF	REF	REF	REF	REF	5-26A	R306
P-H	5905-195-6806	316	RESISTOR, FIXED, COMPOSITION: SAME AS 34	1,2	EA	1				REF	REF	REF	REF	REF	5-26	R308
P-H	5905-195-6761	317	RESISTOR, FIXED, COMPOSITION: SAME AS 236	1,2		1				REF	REF	REF	REF	REF	5-26	R309
P-H	5905-254-9201	318	RESISTOR, FIXED, COMPOSITION: SAME AS 97	1,2	EA	1				REF	REF	REF	REF	REF	5-26	R312
P-H	5905-299-1987	319	RESISTOR, FIXED, COMPOSITION: RC32GF395J (81349)	1	EA	1				*	*	*	5	3	5-26	R319
P-H	5905-299-1986	320	RESISTOR, FIXED, COMPOSITION: RC32GF365J (81349)	2	EA	1				*	*	*	5	3	5-26A	R319
P-H	5905-985-6058	321	RESISTOR, FIXED, FILM: RL42S113J (81349)	1,2	EA	2				*	2	2	13	9	5-26	R335,R342
P-H	5905-195-6752	322	RESISTOR, FIXED, COMPOSITION: SAME AS 153	1	EA	1				REF	REF	REF	REF	REF	5-26	R336
P-H	5905-914-6435	323	RESISTOR, FIXED, FILM: RL42S392J (81349)	1 2	EA EA	0 1				* *	* *	* 2	5 10	3 6	5-26A	R336

(1) SMR CODE	(2) FEDERAL STOCK NUMBER	(3) DESCRIPTION REFERENCE NUMBER & MFR. CODE	USABLE ON CODE	(4) UNIT OF MEAS	(5) QTY INC IN UNIT	(6) 30-DAY DS MAINT ALLOWANCE (a) 1-20	(b) 21-50	(c) 51-100	(7) 30-DAY GS MAINT ALLOWANCE (a) 1-20	(b) 21-50	(c) 51-100	(8) 1 YR ALW PER EQUIP CNTGCY	(9) DEPOT MAINT ALW PER 100 EQUIP	(10) ILLUSTRATIONS (a) FIG NO.	(b) ITEM NO. OR REFERENCE DESIGNATION
P-H	5905-252-4018	324 RESISTOR, FIXED, COMPOSITION: SAME AS 23	1,2	EA	2				REF	REF	REF	REF	REF	5-26	R337,R339
P-H	5905-279-1754	325 RESISTOR, FIXED, COMPOSITION: SAME AS 165	1	EA	2				REF	REF	REF	REF	REF	5-26	R338,R340
P-H	5905-279-2504	326 RESISTOR, FIXED, COMPOSITION: RC20GF156J (81349)	2	EA	2				*	*	2	10	6	5-26A	R338,R340
P-H	5905-762-6907	327 RESISTOR, FIXED, FILM: RL42S223J (81349)	1,2	EA	1				*	*	*	5	3	5-26	R367
P-H	6240-539-8959	328 LAMP, GLOW: SAME AS 85	1,2	EA	1				REF	REF	REF	REF	REF	5-26	V303
P-H	5935-808-9569	329 SOCKET, ELECTRON TUBE: SAME AS 43	1	EA	4				REF	REF	REF	REF	REF	5-26	XV301,XV306,XV310, XV311
P-H	5935-688-3404	330 SOCKET, ELECTRON TUBE: 121-51-11-049 (71785)	2	EA	4				*	2	2	16	12	5-26A	XV301,XV306,XV310, XV311
P-H	5935-856-6987	331 SOCKET, ELECTRON TUBE: 111-51-11-069 (71785)	1	EA	2				*	2	2	13	9	5-26	XV304,XV307
P-H	5935-687-1779	332 SOCKET, ELECTRON TUBE: 111-51-11-014 (71785)	2	EA	2				*	2	2	13	9	5-26A	XV304,XV307
P-H	5935-753-7565	333 SOCKET, ELECTRON TUBE: SMJ-799 (95354)	1,2	EA	2				*	*	2	10	6	5-26	XV308,XV309
A-H		334 HIGH VOLTAGE DISTRIBUTION ETCHED CIRCUIT ASSEMBLY: 170A-65U(N) (28480)	1	EA	1									5-27	A302
A-H		335 HIGH VOLTAGE DISTRIBUTION ETCHED CIRCUIT ASSEMBLY: 2420-738 (28569)	2	EA	1									5-27A	A302
P-H	5910-686-6603	336 CAPACITOR, FIXED, PLASTIC DIELECTRIC: 184P682030 (56289)	1,2	EA	4				*	2	2	21	12	5-27	C307,C308,C309,C311
P-H	5910-280-9608	337 CAPACITOR, FIXED, PLASTIC DIELECTRIC: 184P153030 (56289)	1,2	EA	2				*	2	2	13	6	5-27	C312,C313
P-H	5910-725-7647	338 CAPACITOR, FIXED, MICA DIELECTRIC: CM15C220J03 (81349)	1,2	EA	1				*	2	2	21	12	5-27	C314
P-H	5905-279-2298	339 RESISTOR, FIXED, COMPOSITION: RC42GF565J (81349)	1	EA	8				2	2	3	30	27	5-27	R313 thru R318,R331, R333
			2	EA	8				2	2	3	43	45	5-27	R313 thru R318,R331, R333
P-H	5905-279-1900	340 RESISTOR, FIXED, COMPOSITION: RC42GF475J (81349)	1,2	EA	2				*	*	2	10	6	5-27	R322,R323
P-H	5905-195-6799	341 RESISTOR, FIXED, COMPOSITION: SAME AS 163	1	EA	1				REF	REF	REF	REF	REF	5-27	R325
P-H	5905-192-3973	342 RESISTOR, FIXED, COMPOSITION: SAME AS 27	2	EA	1				REF	REF	REF	REF	REF	5-27A	R325
P-H	5905-279-1697	343 RESISTOR, FIXED, COMPOSITION: RC32GF125J (81349)	1,2	EA	1				*	*	*	5	3	5-27	R326
P-H	5905-185-8510	344 RESISTOR, FIXED, COMPOSITION: SAME AS 98	1,2	EA	1				REF	REF	REF	REF	REF	5-27	R327
P-H	5905-279-3499	345 RESISTOR, FIXED, COMPOSITION: RC20GF273J (81349)	1,2	EA	2				*	*	2	10	6	5-27	R328,R356
P-H	5905-279-1754	346 RESISTOR, FIXED, COMPOSITION: SAME AS 165	1,2	EA	1				REF	REF	REF	REF	REF	5-27	R332
P-H	5905-254-9201	347 RESISTOR, FIXED, COMPOSITION: SAME AS 97	1	EA	1				REF	REF	REF	REF	REF	5-27	R334
P-H	5905-279-2298	348 RESISTOR, FIXED, COMPOSITION: SAME AS 339	2	EA	1				REF	REF	REF	REF	REF	5-27A	R334
P-H	5905-171-1998	349 RESISTOR, FIXED, COMPOSITION: SAME AS 41	1,2	EA	1				REF	REF	REF	REF	REF	5-27	R355
P-H	5905-295-3403	350 RESISTOR, FIXED, COMPOSITION: SAME AS 282	1,2	EA	1				REF	REF	REF	REF	REF	5-27	R357

(1) SMR CODE	(2) FEDERAL STOCK NUMBER	(3) DESCRIPTION REFERENCE NUMBER & MFR. CODE	USABLE ON CODE	(4) UNIT OF MEAS	(5) QTY INC IN UNIT	(6) 30-DAY DS MAINT ALLOWANCE (a) 1-20	(b) 21-50	(c) 51-100	(7) 30-DAY GS MAINT ALLOWANCE (a) 1-20	(b) 21-50	(c) 51-100	(8) 1 YR ALW PER EQUIP CNTGCY	(9) DEPOT MAINT ALW PER 100 EQUIP	(10) ILLUSTRATIONS (a) FIG NO.	(b) ITEM NO. OR REFERENCE DESIGNATION
P-H	5905-892-7108	351 RESISTOR, FIXED, FILM: RN70D4533F (81349)	1,2	EA	1				*	*	*	5	3	5-27	R358
P-H	5905-078-8801	352 RESISTOR, FIXED, FILM: RN70D4023F (81349)	1,2	EA	1				*	*	*	5	3	5-27	R359
P-H	5905-299-2016	353 RESISTOR, FIXED, COMPOSITION: RC32GF393K (81349)	1	EA	1				*	*	*	5	3	5-27	R360
P-H	5905-779-2009	354 RESISTOR, FIXED, FILM: RL32S393J (81349)	2	EA	1				*	*	*	5	3	5-27	R360
P-H	5905-299-2027	355 RESISTOR, FIXED, COMPOSITION: RC32GF123K (81349)	1	EA	2				*	*	2	10	6	5-27	R362, R365
P-H	5905-975-4347	356 RESISTOR, FIXED, FILM: RL32S123J (81349)	2	EA	2				*	*	2	5	10	5-27A	R362, R365
P-H	5905-195-6761	357 RESISTOR, FIXED, COMPOSITION: SAME AS 236	1,2	EA	1				REF	REF	REF	REF	REF	5-27	R364
P-H	5905-102-2740	358 RESISTOR, FIXED, COMPOSITION: RC32GF333J (81349)	1,2	EA	1				*	*	*	5	3	5-27	R366
A-H		359 LOW VOLTAGE RECTIFIER ETCHED CIRCUIT ASSEMBLY: 170A-65M(N) (28480)	1	EA	1									5-28	A401
A-H		360 LOW VOLTAGE RECTIFIER ETCHED CIRCUIT ASSEMBLY: 2420-574 (28569)	2	EA	1									5-28A	A401
P-H	5910-934-0327	361 CAPACITOR, FIXED, CERAMIC DIELECTRIC: SAME AS 11	1,2	EA	3				REF	REF	REF	REF	REF	5-28	C404, C405, C406
P-H	5910-807-5570	362 CAPACITOR, FIXED, PAPER DIELECTRIC: SAME AS 231	1,2	EA	1				REF	REF	REF	REF	REF	5-28	C407
P-H	5961-883-4798	363 SEMICONDUCTOR DEVICE, DIODE: IN3190 (81349)	1,2	EA	12				2	3	5	40	36	5-28	CR401 thru CR412
A-H		364 LOW VOLTAGE REGULATOR AMPLIFIER ETCHED CIRCUIT ASSEMBLY: 170A-65K(N) (28480)	1	EA	1									5-29	A402
A-H		365 LOW VOLTAGE REGULATOR AMPLIFIER ETCHED CIRCUIT ASSEMBLY: 2420-743 (28569)	2	EA	1									5-29A	A402
P-H	5910-728-2144	366 CAPACITOR, FIXED, PLASTIC DIELECTRIC: SAME AS 201	1	EA	3				REF	REF	REF	REF	REF	5-29	C409, C412, C417
P-H	5910-976-3686	367 CAPACITOR, FIXED, PLASTIC DIELECTRIC: SAME AS 202	2	EA	3				REF	REF	REF	REF	REF	5-29A	C409, C412, C417
P-H	5910-993-8367	368 CAPACITOR, FIXED, CERAMIC DIELECTRIC: SAME AS 10	1 2	EA EA	2 1				REF REF	REF REF	REF REF	REF REF	REF REF	5-29 5-29A	C413, C418 C418
P-H	5910-803-2880	369 CAPACITOR, FIXED, ELECTROLYTIC: CL65BK200MP3 (81349)	1,2	EA	1				*	*	2	8	3	5-29	C419
P-H	5910-807-5570	370 CAPACITOR, FIXED, PAPER DIELECTRIC: SAME AS 231	1,2	EA	1				REF	REF	REF	REF	REF	5-29	C426
P-H	5961-852-7549	371 SEMICONDUCTOR DEVICE, DIODE: SAME AS 125	1,2	EA	2				REF	REF	REF	REF	REF	5-29	CR413, CR416
P-H	5961-752-5229	372 TRANSISTOR: 2N404A (81349)	1 2	EA EA	7 8				2 2	2 2	3 3	33 39	21 24	5-29 5-29A	Q401,Q402,Q407,Q408, Q412,Q414,Q415 Q401,Q402,Q406,Q407, Q408,Q412,Q414,Q415
P-H	5961-851-5923	373 TRANSISTOR: 2N1309 (81349)	1 2	EA EA	3 2				* *	2 *	2 2	18 10	9 6	5-29 5-29A	Q406, Q410, Q411 Q410, Q411
P-H	5905-804-6099	374 RESISTOR, FIXED, FILM: SAME AS 133	1,2	EA	1				REF	REF	REF	REF	REF	5-29	R408
P-H	5905-190-8889	375 RESISTOR, FIXED, COMPOSITION: SAME AS 186	1,2	EA	1				REF	REF	REF	REF	REF	5-29	R409
P-H	5905-852-4474	376 RESISTOR, FIXED, FILM: LPI-5-20K (14674)	1,2	EA	2				*	*	2	10	6	5-29	R410, R412

(1) SMR CODE	(2) FEDERAL STOCK NUMBER	(3) DESCRIPTION REFERENCE NUMBER & MFR. CODE		USABLE ON CODE	(4) UNIT OF MEAS	(5) QTY INC IN UNIT	(6) 30-DAY DS MAINT ALLOWANCE (a) 1-20	(b) 21-50	(c) 51-100	(7) 30-DAY GS MAINT ALLOWANCE (a) 1-20	(b) 21-50	(c) 51-100	(8) 1 YR ALW PER EQUIP CNTGCY	(9) DEPOT MAINT ALW PER 100 EQUIP	(10) ILLUSTRATIONS (a) FIG NO.	(b) ITEM NO. OR REFERENCE DESIGNATION
P-H	5905-985-6058	377	RESISTOR, FIXED, FILM: SAME AS 321	1,2	EA	1				REF	REF	REF	REF	REF	5-29	R413
P-H	5905-730-0294	378	RESISTOR, FIXED, FILM: RL32S134J (81349)	1,2	EA	1				*	*	*	5	3	5-29	R415
P-H	5905-767-7587	379	RESISTOR, FIXED, FILM: RL20S511J (81349)	1,2	EA	2				*	*	2	10	6	5-29	R416, R435
P-H	5905-192-4490	380	RESISTOR, FIXED, COMPOSITION: RC20GF330J (81349)	1,2	EA	1				*	*	*	5	3	5-29	R417
P-H	5905-988-2251	381	RESISTOR, FIXED, FILM: RL20AD111J (81349)	1	EA	1				*	*	*	5	3	5-29	R425
P-H	5905-192-3971	382	RESISTOR, FIXED, COMPOSITION: RC20GF331J (81349)	2	EA	1				*	*	*	5	3	5-29A	R425
P-H	5905-299-2020	383	RESISTOR, FIXED, COMPOSITION: RC32GF273J (81349)	1	EA	2				*	*	2	10	6	5-29	R426, R448
P-H	5905-769-8529	384	RESISTOR, FIXED, FILM: RL32S273J (81349)	2	EA	2				*	*	2	10	6	5-29A	R426, R448
P-H	5905-805-1432	385	RESISTOR, FIXED, WIREWOUND: RW55G180 (81349)	1	EA	1				*	*	*	5	3	5-29	R427
P-H	5905-779-2376	386	RESISTOR, FIXED, WIREWOUND: RW67V180 (81349)	2	EA	1				*	*	*	5	3	5-29A	R427
P-H	5905-769-8533	387	RESISTOR, FIXED, FILM: SAME AS 25	2	EA	1				REF	REF	REF	REF	REF	5-29	R428
P-H	5905-767-3233	388	RESISTOR, FIXED, FILM: RL20AD823J (81349)	1	EA	1				*	*	*	5	3	5-29	R429
P-H	5905-782-0901	389	RESISTOR, FIXED, FILM: SAME AS 152	1,2	EA	1				REF	REF	REF	REF	REF	5-29	R430
P-H	5905-542-9113	390	RESISTOR, FIXED, FILM: RN70B5112F (81349)	1	EA	1				*	*	*	5	3	5-29	R432
P-H	5905-975-1273	391	RESISTOR, FIXED, FILM: RL32S563J (81349)	2	EA	1				*	*	*	5	3	5-29A	R432
P-H	5905-552-5051	392	RESISTOR, FIXED, FILM: RN70D9092F (81349)	1	EA	1				*	2	2	16	12	5-29	R433
P-H	5905-975-1300	393	RESISTOR, FIXED, FILM: RL20S913J (81349)	2	EA	1				*	*	2	8	5	5-29A	R433
P-H	5905-767-3204	394	RESISTOR, FIXED, FILM: SAME AS 83	1,2	EA	1				REF	REF	REF	REF	REF	5-29	R434
P-H	5905-767-3219	395	RESISTOR, FIXED, FILM: RL20AD202J (81349)	1	EA	1				*	*	*	5	3	5-29	R437
P-H	5905-299-1541	396	RESISTOR, FIXED, COMPOSITION: SAME AS 30	1,2	EA	2				REF	REF	REF	REF	REF	5-29	R443, R462
P-H	5905-299-2022	397	RESISTOR, FIXED, COMPOSITION: RC32GF223J (81349)	1,2	EA	1				*	2	2	19	15	5-29	R444
P-H	5905-903-6828	398	RESISTOR, FIXED, FILM: RL42S240J (81349)	1,2	EA	1				*	*	*	5	3	5-29	R445
P-H	5905-975-1273	399	RESISTOR, FIXED, FILM: RL42S182J (81349)	1,2	EA	1				*	*	*	5	3	5-29	R446
P-H	5905-279-3503	400	RESISTOR, FIXED, COMPOSITION: RC20GF682J (81349)	1,2	EA	1				*	*	*	5	3	5-29	R447
P-H	5905-767-3231	401	RESISTOR, FIXED, FILM: RL20S432J (81349)	1,2	EA	1				*	*	*	5	3	5-29	R449
P-H	5905-769-8533	402	RESISTOR, FIXED, FILM: SAME AS 25	1,2	EA	1				REF	REF	REF	REF	REF	5-29	R450
P-H	5905-195-6791	403	RESISTOR, FIXED, COMPOSITION: RC20GF681J (81349)	1,2	EA	1				*	*	*	5	3	5-29	R451
P-H	5905-279-3504	404	RESISTOR, FIXED, COMPOSITION: SAME AS 255	1,2	EA	1				REF	REF	REF	REF	REF	5-29	R459

(1) SMR CODE	(2) FEDERAL STOCK NUMBER	(3) DESCRIPTION REFERENCE NUMBER & MFR. CODE		USABLE ON CODE	(4) UNIT OF MEAS	(5) QTY INC IN UNIT	(6) 30-DAY DS MAINT ALLOWANCE (a) 1-20	(b) 21-50	(c) 51-100	(7) 30-DAY GS MAINT ALLOWANCE (a) 1-20	(b) 21-50	(c) 51-100	(8) 1 YR ALW PER EQUIP CNTGCY	(9) DEPOT MAINT ALW PER 100 EQUIP	(10) ILLUSTRATIONS (a) FIG NO.	(b) ITEM NO. OR REFERENCE DESIGNATION
P-H	5905-299-2013	405	RESISTOR, FIXED, COMPOSITION: RC32GF473J (81349)	1,2	EA	1				*	*	*	5	3	5-29	R461
P-H	5905-252-4018	406	RESISTOR, FIXED, COMPOSITION: SAME AS 23	1,2	EA	1				REF	REF	REF	REF	REF	5-29	R463
P-H	5935-856-6987	407	SOCKET, ELECTRON TUBE: SAME AS 331	1	EA	1				REF	REF	REF	REF	REF	5-29	XV401
P-H	5935-850-6567	408	SOCKET, ELECTRON TUBE: 3807-2-2 (91662)	2	EA	1				*	*	*	5	3	5-29A	XV401
P-H	5995-985-7744	409	CABLE ASSEMBLY, POWER, ELECTRICAL: CX-4704/U(8'0"): 170A-16AL(N) (28480)	1,2	EA	1				*	*	2	5	3	1-1	A403
P-H	5935-843-7362	410	CONNECTOR, PLUG, ELECTRICAL: MS24663 (81349)	1,2	EA	1				*	*	2	8	3	1-1	P401
P-H	5935-805-4991	411	CONNECTOR, PLUG, ELECTRICAL: MS3106R-14S-7S (81349)	1,2	EA	1				*	*	2	8	3	1-1	P402
P-H	6145-284-0579	412	CABLE, POWER, ELECTRICAL: CO-03LGF(3/18)0206 (81349)	1,2	FT	8				*	*	10	50	50	1-1	W401
P-H	5995-752-8781	413	CORD CG-409F/U: 170A-16AM(N) (28480)	1,2	EA	2				*	*	2	10	6	1-1	A603, A604
P-H	5935-577-2281	414	CONNECTOR, PLUG, ELECTRICAL UG-88C/U	1,2	EA	4				*	*	2	10	6	1-1	P601 thru P604
P-H	6145-542-6092	415	CABLE, RADIOFREQUENCY: RG-58C/U (81349)	1,2	FT	32				*	*	64	192	192	1-1	W605, W606
A-H		416	SWEEP TIME SWITCH ASSEMBLY: 170A-19B(N) (28480)	1	EA	1									5-18	A1000
P-H	5930-054-0356	417	SWEEP TIME SWITCH ASSEMBLY: 19915-673 (28569)	2	EA	1				*	*	*	4	2	5-18A	A1000
P-H	5910-820-6114	418	CAPACITOR, FIXED, PAPER DIELECTRIC: CP05A1KC474K3 (81349)	1,2	EA	1				*	*	2	8	3	5-18	C1001
P-H	5910-819-5745	419	CAPACITOR, FIXED, PAPER DIELECTRIC: SAME AS 298	1,2	EA	1				REF	REF	REF	REF	REF	5-18	C1002
P-H	5910-727-9848	420	CAPACITOR, FIXED, MICA DIELECTRIC: CM35D472JN3 (81349)	1,2	EA	1				*	*	2	8	3	5-18	C1003
P-H	5910-807-9305	421	CAPACITOR, FIXED, MICA DIELECTRIC: SAME AS 118	1	EA	1				REF	REF	REF	REF	REF	5-18	C1004
P-H	5910-762-2945	422	CAPACITOR, FIXED, MICA DIELECTRIC: CM15F471G03 (81349)	2	EA	1				*	*	*	5	3	5-18A	C1004
P-H	5910-952-9440	423	CAPACITOR, FIXED, PLASTIC DIELECTRIC: CQ09A1MC105J3 (81349)	1,2	EA	1				*	*	2	8	3	5-18	C1006
P-H	5910-959-4596	424	CAPACITOR, FIXED, PLASTIC DIELECTRIC: CQ09A1MC104J3 (81349)	1,2	EA	1				*	*	2	8	3	5-18	C1007
P-H	5910-936-7514	425	CAPACITOR, FIXED, PLASTIC DIELECTRIC: CQ09A1MC103J3 (81349)	1,2	EA	1				*	*	2	8	3	5-18	C1008
P-H	5910-725-4795	426	CAPACITOR, FIXED, MICA DIELECTRIC: CM20F102G03 (81349)	1,2	EA	1				*	*	2	8	3	5-18	C1009
P-H	5910-578-1623	427	CAPACITOR, VARIABLE, CERAMIC DIELECTRIC: SAME AS 91	1,2	EA	4				REF	REF	REF	REF	REF	5-18	C1010, C1012, C1014, C1016
P-H	5910-889-4777	428	CAPACITOR, FIXED, MICA DIELECTRIC: SAME AS 13	1,2	EA	1				REF	REF	REF	REF	REF	5-18	C1011
P-H	5910-807-2595	429	CAPACITOR, FIXED, MICA DIELECTRIC: SAME AS 120	1,2	EA	1				REF	REF	REF	REF	REF	5-18	C1013
P-H	5910-725-7647	430	CAPACITOR, FIXED, MICA DIELECTRIC: SAME AS 338	1,2	EA	1				REF	REF	REF	REF	REF	5-18	C1015

(1) SMR CODE	(2) FEDERAL STOCK NUMBER	(3) DESCRIPTION REFERENCE NUMBER & MFR. CODE		USABLE ON CODE	(4) UNIT OF MEAS	(5) QTY INC IN UNIT	(6) 30-DAY DS MAINT ALLOWANCE (a) 1-20	(b) 21-50	(c) 51-100	(7) 30-DAY GS MAINT ALLOWANCE (a) 1-20	(b) 21-50	(c) 51-100	(8) 1 YR ALW PER EQUIP CNTGCY	(9) DEPOT MAINT ALW PER 100 EQUIP	(10) ILLUSTRATIONS (a) FIG NO.	(b) ITEM NO. OR REFERENCE DESIGNATION
P=H	5905-279-1883	431	RESISTOR, FIXED, COMPOSITION: RC20GF335J (81349)	1,2	EA	1				*	*	*	5	3	5-18	R1001
P=H	5905-279-2514	432	RESISTOR, FIXED, COMPOSITION: RC20GF564K (81349)	1	EA	1				*	*	*	5	3	5-18	R1005
P=H	5905-279-2515	433	RESISTOR, FIXED, COMPOSITION: SAME AS 138	2	EA	1				REF	REF	REF	REF	REF	5-18A	R1005
P=H	5905-192-0662	434	RESISTOR, FIXED, COMPOSITION: SAME AS 171	1	EA	2				REF	REF	REF	REF	REF	5-18	R1006, R1007
P=H	5905-768-5791	435	RESISTOR, FIXED, FILM: RL20S184J (81349)	2	EA	1				*	*	2	8	5	5-18A	R1006
P=H	5905-880-2206	436	RESISTOR, FIXED, FILM: RL20S164J (81349)	2	EA	1				*	*	2	8	5	5-18A	R1007
P=H	5905-279-5621	437	RESISTOR, FIXED, FILM: DC1(36 meg) (19701)	1	EA	1				*	*	*	5	3	5-18	R1011
P=H	5905-056-6269	438	RESISTOR, FIXED, FILM: DC2(37 meg) (91637)	2	EA	1				*	*	*	5	3	5-18A	R1011
P=H	5905-646-5716	439	RESISTOR, FIXED, FILM: RN75B4534F (81349)	1,2	EA	4				*	2	2	16	12	5-18	R1012, R1013, R1026, R1027
P=H	5905-518-5644	440	RESISTOR, FIXED, FILM: RN75B3654F (81349)	1,2	EA	1				*	*	*	5	3	5-18	R1014
P=H	5905-057-9659	441	RESISTOR, FIXED, FILM: RN70D9093F (81349)	1,2	EA	2				*	*	2	10	6	5-18	R1015, R1016
P=H	5905-993-5968	442	RESISTOR, FIXED, FILM: RN70D3653F (81349)	1,2	EA	1				*	*	*	5	3	5-18	R1017
P=H	5905-552-5051	443	RESISTOR, FIXED, FILM: SAME AS 392	1	EA	3				REF	REF	REF	REF	REF	5-18	R1018, R1019, R1020
P=H	5905-988-0149	444	RESISTOR, FIXED, FILM: RN70D9092F (81349)	2	EA	3				*	2	2	13	10	5-18A	R1018, R1019, R1020
P=H	5905-279-3513	445	RESISTOR, FIXED, COMPOSITION: SAME AS 130	1,2	EA	1				REF	REF	REF	REF	REF	5-18	R1021
P=H	5930-757-3079	446	SWITCH, ROTARY: 3100-0779-9 (28480)	1	EA	1				*	*	2	10	6	5-18	S1001
P=H	6105-757-3075	447	MOTOR, ALTERNATING CURRENT: YY1W027 (62119)	1	EA	1				*	*	2	8	4	5-11	B401
P=H	6105-134-9996	448	MOTOR, DIRECT CURRENT: YY1W-4AJH (62119)	2	EA	1				*	*	2	8	4	5-11A	B401
P=H	5961-811-5799	449	SEMICONDUCTOR DEVICE, DIODE: 1N1202 (81349)	1,2	EA	2				*	2	2	13	6	5-10	CR414, CR415
P=H	5910-728-2212	450	CAPACITOR, FIXED, CERAMIC DIELECTRIC: 706C1 (56289)	1,2	EA	2				*	2	2	13	6	5-12	C306, C315
P=H	5910-809-4773	451	CAPACITOR, FIXED, ELECTROLYTIC: D29405 (56289)	1,2	EA	3				*	2	2	27	15	5-10 5-11	C401, C416 C408
P=H	5910-827-0175	452	CAPACITOR, FIXED, PAPER DIELECTRIC: CP05A1KE105K3 (81349)	1,2	EA	2				*	2	2	13	6	5-11	C402, C410
P=H	5910-809-1121	453	CAPACITOR, FIXED, ELECTROLYTIC: D29401 (56289)	1	EA	1				*	2	2	12	5	5-10	C403
P=H	5910-857-7280	454	CAPACITOR, FIXED, ELECTROLYTIC: CE41C450R (81349)	2	EA	1				*	*	2	8	5	5-10A	C403
P=H	5910-809-4774	455	CAPACITOR, FIXED, ELECTROLYTIC: 029402 (56289)	1	EA	2				*	2	2	19	10	5-10	C411, C420
P=H	5910-615-9519	456	CAPACITOR, FIXED, ELECTROLYTIC: CE41C500N (81349)	2	EA	2				*	2	2	13	10	5-10A	C411, C420
P=H	5910-754-6956	457	CAPACITOR, FIXED, ELECTROLYTIC: 32D 315 (56289)	1	EA	1				*	2	2	12	5	5-9	C425
P=H	5910-052-2025	458	CAPACITOR, FIXED, ELECTROLYTIC: CE71C702F (81349)	2	EA	1				*	*	*	8	5	5-9	C425

(1) SMR CODE	(2) FEDERAL STOCK NUMBER	(3) DESCRIPTION REFERENCE NUMBER & MFR. CODE		USABLE ON CODE	(4) UNIT OF MEAS	(5) QTY INC IN UNIT	(6) 30-DAY DS MAINT ALLOWANCE (a) 1-20	(b) 21-50	(c) 51-100	(7) 30-DAY GS MAINT ALLOWANCE (a) 1-20	(b) 21-50	(c) 51-100	(8) 1 YR ALW PER EQUIP CNTGCY	(9) DEPOT MAINT ALW PER 100 EQUIP	(10) ILLUSTRATIONS (a) FIG NO.	(b) ITEM NO. OR REFERENCE DESIGNATION
P-H	6625-893-1795	459	DELAY LINE: 170B-16A (28480)	1	EA	1				*	*	2	13	10	5-9	DL1, DL2
P-H	6625-960-4308	460	DELAY LINE: 3030-170 (28569)	2	EA	1				*	*	2	13	10	5-9	DL1, DL2
P-H	5995-045-4579	461	CABLE ASSEMBLY, RADIOFREQUENCY: 3030-212 (28569)	1,2	EA	1				*	*	2	8	5	5-9	DL301
P-H	6240-892-4420	462	LAMP,GLOW: MS25252-NE2D (81349)	1,2	EA	1				2	2	3	33	30	5-13	DS401
P-H	6240-539-8959	463	LAMP, GLOW: SAME AS 85	1	EA	1				REF	REF	REF	REF	REF	5-11	DS402
P-H	6240-179-1811	464	LAMP, GLOW: NE-2 (24455)	2	EA	1				*	*	*	8	5	5-11	DS402
P-O	6240-155-8706	465	LAMP, INCANDESCENT: MS15571-2 (81349)	1,2	EA	5				2	3	6	71	50	5-9 5-13	DS403 thru DS406 DS1001
P-H	5935-258-1767	466	COVER, ELECTRICAL CONNECTOR CW-123A/U	1	EA	6				*	2	2	28	24	5-13	E101, E102, E104, E201, E301, E302
				2	EA	6				2	2	3	33	33	5-13	E101, E102, E104, E201, E301, E302
P-O	5920-894-4556	467	FUSE, CARTRIDGE: F03B250V8AS (81349)	1	EA	2				2	4	11	242	200	5-11	F401, F402
P-O	5920-519-7733	468	FUSE, CARTRIDGE: F03A250V8AS (81349)	2	EA	2				2	4	11	242	200	5-11	F401, F402
P-O	5920-280-8344	469	FUSE, CARTRIDGE: F02A250V1/2AS (81349)	1,2	EA	1				2	6	11	130	100	5-11	F403
P-O	5920-280-4465	470	FUSE, CARTRIDGE: F02A250V1AS (81349)	1,2	EA	2				2	4	11	242	200	5-10	F404, F405
P-O	5920-295-9270	471	FUSE, CARTRIDGE: F03B32V10AS (81349)	1,2	EA	1				2	6	11	130	100	5-11	F406
P-H	5915-809-9638	472	FILTER, LINE: 0034 (98734)	1,2	EA	1				*	*	*	5	3	5-12	FL401
P-H	5935-082-0481	473	CONNECTOR, RECEPTACLE, ELECTRICAL: 26-4200-16S (02660)	1,2	EA	1				*	*	2	8	3	5-9	J1
P-H	5935-843-9008	474	CONNECTOR, RECEPTACLE, ELECTRICAL: MS35179-1094A (81349)	1	EA	6				2	2	3	33	33	5-13	J101, J102, J104, J201, J301, J302
P-H	5935-552-7660	475	CONNECTOR, RECEPTACLE, ELECTRICAL: UG-625B/U	2	EA	4				2	2	3	38	40	5-13	J101, J102, J104, J203
P-H	5935-502-5151	476	CONNECTOR, RECEPTACLE, ELECTRICAL: UG-657/U	2	EA	2				*	2	2	13	10	5-13	J301, J302
P-H	5935-295-6950	477	CONNECTOR, RECEPTACLE, ELECTRICAL: 26-4200-32S (02660)	1,2	EA	1				*	*	*	5	3	5-12	J105
P-H	5950-504-6500	478	REACTOR: 3250-86 (28569)	1,2	EA	2				*	*	2	10	6	5-11	L402, L404
P-H	5950-810-0824	479	REACTOR: 3250-87 (28569)	1,2	EA	2				*	*	2	10	6	5-10	L403, L405
P-H	5950-809-4797	480	REACTOR: 3250-88 (28569)	1,2	EA	1				*	*	*	5	3	5-10	L406
P-H	5355-737-4883	481	KNOB: 0370-0037-9 (28480)	1	EA	3				*	*	2	8	6	5-13	MP101, MP102, MP202
P-H	5355-656-1322	482	KNOB: 11505-90 (28569)	2	EA	4				2	2	3	38	40	5-13	MP101, MP102, MP106, MP202
P-H	5355-688-6955	483	KNOB: 0370-0061-9 (28480)	1	EA	1				*	*	*	8	3	5-13	MP103
P-H	5355-656-1319	484	KNOB: 11505-94 (28569)	2	EA	4				*	2	2	16	16	5-13	MP103, MP104, MP105, MP203
P-H	5355-965-4881	485	KNOB: 0370-0062-9 (28480)	1	EA	3				*	2	2	12	10	5-13	MP104, MP105, MP203
P-H	5355-728-2881	486	KNOB: 0370-0067-9 (28480)	1	EA	1				*	2	2	13	9	5-13	MP106
P-O	4110-727-8796	487	FILTER, AIR CONDITIONER: C-7066-3 (94330)	1,2	EA	1				*	*	*	4	4	2-2	MP147

(1) SMR CODE	(2) FEDERAL STOCK NUMBER	(3) DESCRIPTION REFERENCE NUMBER & MFR. CODE	USABLE ON CODE	(4) UNIT OF MEAS	(5) QTY INC IN UNIT	(6) 30-DAY DS MAINT ALLOWANCE (a) 1-20	(b) 21-50	(c) 51-100	(7) 30-DAY GS MAINT ALLOWANCE (a) 1-20	(b) 21-50	(c) 51-100	(8) 1 YR ALW PER EQUIP CNTGCY	(9) DEPOT MAINT ALW PER 100 EQUIP	(10) ILLUSTRATIONS (a) FIG NO.	(b) ITEM NO. OR REFERENCE DESIGNATION
P-H	5355-755-6804	488 KNOB: 0370-0029-9 (28480)	1	EA	1				*	*	*	4	2	5-13	MP201
P-H	5355-656-1321	489 KNOB: 11505-91 (28569)	2	EA	1				*	*	*	4	2	5-13	MP201
P-H	5355-682-3543	490 KNOB: 0370-0026-9 (28480)	1	EA	4				*	*	2	10	4	5-13	MP301, MP302, MP303, MP402
P-H	5355-656-1318	491 KNOB: 11505-87 (28569)	2	EA	5				*	2	2	16	16	5-13	MP301, MP302, MP303, MP304, MP402
P-H	5355-682-3544	492 KNOB: 0370-0077-9 (28480)	1	EA	1				*	*	*	5	4	5-13	MP304
X2-H		493 SHIELD, RESISTOR: 5040-0418 (28480)	1	EA	2									5-9	MP306, MP307
X2-H		494 INSULATOR, CONNECTOR: 5040-0702 (28480)	1	EA	4									5-13	MP319, MP320, MP321, MP322
P-H	4450-801-4051	495 IMPELLER, FAN, AXIAL: 3160-0009-9 (28480)	1	EA	1				*	*	*	5	3	5-12	MP419
P-H	4140-050-6356	496 IMPELLER, FAN, AXIAL: 2380-4 (28569)	2	EA	1				*	*	*	5	3	5-12	MP419
P-H	5940-543-8538	497 INSULATOR, FEEDTHRU: FT-SM-22 TUR (98291)	2	EA	1				*	*	2	15	14		MP420
X2-H		498 LATCH, STEEL: SC-B-83314-42 (98003)	1	EA	4									1-1	MP605, MP606, MP607, MP608
P-O	5330-917-7011	499 GASKET, RUBBER: 496X (02286)	1	FT	6				6	48	200	72	60	1-1	MP609
P-H	5961-082-4203	500 TRANSISTOR: 2N3132 (81349)	1	EA	8				2	2	3	40	32	5-10	Q403, Q404, Q405, Q409, Q413, Q416, Q418, Q419
P-H	5961-934-3002	501 TRANSISTOR: 2N3618 (04713)	2	EA	8				2	2	3	40	32	5-10	Q403, Q404, Q405, Q409, Q413, Q416, Q418, Q419
P-H	5961-846-7338	502 TRANSISTOR: 2N1358 (81349)	1,2	EA	1				*	*	2	8	4	5-10	Q417
P-H	5905-503-5984	503 RESISTOR, VARIABLE: RV4LAYSA101A (81349)	1,2	EA	1				*	*	*	5	3	5-9	R13
P-H	5905-666-2556	504 RESISTOR, FIXED, WIREWOUND: RW55V182 (81349)	1,2	EA	1				*	*	*	5	3	5-9	R87
P-H	5905-254-9201	505 RESISTOR, FIXED, COMPOSITION: SAME AS 97	1,2	EA	1				REF	REF	REF	REF	REF	5-9	R88
P-H	5905-842-5895	506 RESISTOR, FIXED, WIREWOUND: RW55V302 (81349)	1,2	EA	1				*	*	*	5	3	5-9	R95
P-H	5905-549-5382	507 RESISTOR, FIXED, WIREWOUND: RW29V122 (81349)	1,2	EA	1				*	*	*	5	3	5-9	R96
P-H	5905-577-7207	508 RESISTOR, FIXED, WIREWOUND: RW55V562 (81349)	1,2	EA	1				*	*	*	5	3	5-9	R99
P-H	5905-552-2093	509 RESISTOR, VARIABLE: RV4LAYSA254A (81349)	1,2	EA	2				*	*	2	10	6	5-10	R114, R243
P-H	5905-501-5184	510 RESISTOR, VARIABLE: RV4LAYSA503A (81349)	1,2	EA	2				*	*	2	10	6	5-10	R163, R361
P-H	5905-501-7314	511 RESISTOR, VARIABLE: RV4LAYSA253A (81349)	1,2	EA	5				*	2	2	19	15	5-10	R178, R1002, R1003, R1004, R1024
P-H	5905-646-5958	512 RESISTOR, VARIABLE: RV4LAYSA102A (81349)	1,2	EA	2				*	*	2	10	6	5-10 5-11	R211 R452
P-H	5905-983-7147	513 RESISTOR, VARIABLE: 2100-0121-9 (28480)	1	EA	1				*	*	*	5	3	5-13	R216
P-H	5905-054-0349	514 RESISTOR, VARIABLE: 16925-410 (28569)	2	EA	1				*	*	*	5	3	5-13	R216
P-H	5905-793-3065	515 RESISTOR, VARIABLE: JD1L040S101MC (01121)	1,2	EA	1				*	*	*	5	3	5-10	R223A/B

(1) SMR CODE	(2) FEDERAL STOCK NUMBER	(3) DESCRIPTION REFERENCE NUMBER & MFR. CODE		USABLE ON CODE	(4) UNIT OF MEAS	(5) QTY INC IN UNIT	(6) 30-DAY DS MAINT ALLOWANCE (a) 1-20	(b) 21-50	(c) 51-100	(7) 30-DAY GS MAINT ALLOWANCE (a) 1-20	(b) 21-50	(c) 51-100	(8) 1 YR ALW PER EQUIP CNTGCY	(9) DEPOT MAINT ALW PER 100 EQUIP	(10) ILLUSTRATIONS (a) FIG NO.	(b) ITEM NO. OR REFERENCE DESIGNATION
P-H	5905-100-7936	517	RESISTOR, FIXED, WIREWOUND: RW32G123 (81349)	1	EA	2				*	*	2	10	6	5-11	R265, R270
P-H	5905-642-1680	518	RESISTOR, FIXED, WIREWOUND: RW33V123 (81349)	2	EA	2				*	*	2	10	6	5-11	R265, R270
P-H	5905-185-8510	519	RESISTOR, FIXED, COMPOSITION: SAME AS 98	1,2	EA	1				REF	REF	REF	REF	REF	5-12	R310
P-H	5905-192-0390	520	RESISTOR, FIXED, COMPOSITION: SAME AS 24	1,2	EA	1				REF	REF	REF	REF	REF	5-12	R311
P-H	5905-518-5609	521	RESISTOR, VARIABLE: SAME AS 224	1,2	EA	1				REF	REF	REF	REF	REF	5-9	R321
P-H	5905-769-5453	522	RESISTOR, VARIABLE: 53MV (12697)	1,2	EA	1				*	*	*	5	3	5-13	R324
P-H	5905-795-0651	523	RESISTOR, VARIABLE: CM24705 (12697)	1,2	EA	1				*	*	*	5	3	5-13	R330
P-H	5905-539-4900	524	RESISTOR, VARIABLE: RV4NAYSD503A (81349)	1,2	EA	1				*	*	*	5	3	5-13	R363
P-H	5905-892-0158	525	RESISTOR, FIXED, WIREWOUND: RW59VR25 (81349)	1	EA	1				*	*	*	5	3	5-13	R368
P-H	5905-847-4306	526	RESISTOR, FIXED, WIREWOUND: 18577-156 (28569)	2	EA	1				*	*	*	5	3	5-13	R368
P-H	5905-171-1986	527	RESISTOR, FIXED, COMPOSITION: SAME AS 182	1 2	EA EA	1 1				REF REF	REF REF	REF REF	REF REF	REF REF	5-11 5-44A	R400 R400
P-H	5905-190-8882	528	RESISTOR, FIXED, COMPOSITION: RC20GF393K (81349)	1	EA	1				*	*	*	5	3	5-10	R401
P-H	5905-171-1998	529	RESISTOR, FIXED, COMPOSITION: SAME AS 41	2	EA	1				REF	REF	REF	REF	REF	5-10	R401
P-H	5905-249-3663	530	RESISTOR, FIXED, COMPOSITION: RC42GF683J (81349)	1,2	EA	1				*	*	*	5	3	5-10	R402
P-H	5905-855-4075	531	RESISTOR, FIXED, WIREWOUND: RW31V500 (81349)	1 2	EA	1 2				* *	* *	* 2	5 10	3 6	5-11 5-11	R403 R403, R424
P-H	5905-549-3752	532	RESISTOR, FIXED, WIREWOUND: RW29V161 (81349)	1,2	EA	4				*	2	2	16	12	5-11	R405, R406, R407, R438
P-H	5905-518-5595	533	RESISTOR, VARIABLE: RV4LAYSA103A (81349)	1,2	EA	1				*	*	*	5	3	5-10	R411
P-H	5905-841-7440	534	RESISTOR, FIXED, WIREWOUND: RW32W710 (81349)	1,2	EA	1				*	*	*	5	3	5-11	R421
P-H	5905-192-0626	535	RESISTOR, FIXED, COMPOSITION: SAME AS 149	1	EA	2				REF	REF	REF	REF	REF	5-10	R422, R440
P-H	5905-171-1976	536	RESISTOR, FIXED, COMPOSITION: SAME AS 150	2	EA	2				REF	REF	REF	REF	REF	5-10	R422, R440
P-H	5905-279-3416	537	RESISTOR, FIXED, COMPOSITION: RC42GF330J (81349)	1,2	EA	3				*	2	2	13	9	5-10 5-9	R423, R441 R457
P-H	5905-811-9399	539	RESISTOR, FIXED, WIREWOUND: RW32V510 (81349)	2	EA	1				*	*	*	5	3	5-11	R424
P-H	5905-539-2567	540	RESISTOR, VARIABLE: RV4LAYSA252A (81349)	1,2	EA	1				*	*	*	5	3	5-10	R431
P-H	5905-542-9835	541	RESISTOR, FIXED, WIREWOUND: RW55V120 (81349)	1,2	EA	1				*	*	*	5	3	5-11	R439
P-H	5905-642-1969	542	RESISTOR, FIXED, WIREWOUND: RW29V121 (81349)	1,2	EA	1				*	*	*	5	3	5-11	R442
P-H	5905-253-1229	543	RESISTOR, FIXED, COMPOSITION: RC42GF331K (81349)	1,2	EA	1				*	*	*	5	3	5-10	R458
P-H	5905-950-2856	544	RESISTOR, FIXED, WIREWOUND: RW24GIR5 (81349)	1,2	EA	1				*	*	*	5	3	5-12	R460
P-H	5905-503-6218	545	RESISTOR, VARIABLE: RV4LAYSA251A (81349)	1,2	EA	1				*	*	*	5	3	5-11	R464

(1) SMR CODE	(2) FEDERAL STOCK NUMBER	(3) DESCRIPTION REFERENCE NUMBER & MFR. CODE	USABLE ON CODE	(4) UNIT OF MEAS	(5) QTY INC IN UNIT	(6) 30-DAY DS MAINT ALLOWANCE (a) 1-20	(b) 21-50	(c) 51-100	(7) 30-DAY GS MAINT ALLOWANCE (a) 1-20	(b) 21-50	(c) 51-100	(8) 1 YR ALW PER EQUIP CNTGCY	(9) DEPOT MAINT ALW PER 100 EQUIP	(10) ILLUSTRATIONS (a) FIG NO.	(b) ITEM NO. OR REFERENCE DESIGNATION
P-H	5905-783-8818	546 RESISTOR, VARIABLE: RGC-90 (71450)	1,2	EA	1				*	*	*	5	3	5-11	R1009
P-H	5905-299-2023	547 RESISTOR, FIXED, COMPOSITION: RC32GF183K (81349)	1	EA	1				*	*	*	5	3	5-11	R1010
P-H	5905-299-2025	548 RESISTOR, FIXED, COMPOSITION: SAME AS 168	2	EA	1				REF	REF	REF	REF	REF	5-11	R1010
P-H	5905-804-6088	549 RESISTOR, VARIABLE, WIREWOUND: RA20NBSD500A (81349)	1,2	EA	1				*	*	*	5	3	5-13	R1025
P-H	5930-809-4792	550 SWITCH, PUSH: 3101-0024-9 (28480)	1	EA	1				*	*	2	10	6	5-13	S1
P-H	5930-936-3789	551 SWITCH, PUSH: 19910-157 (28569)	2	EA	1				*	*	2	10	6	5-13	S1
P-H	5930-655-1514	552 SWITCH, TOGGLE: MS35058-22 (81349)	1,2	EA	1				*	*	2	8	4	5-13	S201
P-H	5930-655-1575	553 SWITCH, TOGGLE: MS35059-22 (81349)	1,2	EA	1				*	*	2	10	4	5-13	S401
P-H	5930-790-4889	554 SWITCH, THERMOSTATIC: 20400D/L140-2/4561-2 (82647)	1	EA	1				*	*	2	10	4	5-11	S402
P-H	5930-895-6393	555 SWITCH, THERMOSTATIC: 20400D-52-21-L140-2 (82647)	2	EA	1				*	*	2	10	14	5-11	S402
M-H		556 TERMINAL BOARD: DAIAIAIDAI (06540)	1	EA	1									5-9	TB1
M-D		557 TERMINAL BOARD: SAME AS 216	1	EA	2									5-10	TB2, TB404
M-H		558 TERMINAL BOARD: 744 (06540)	1	EA	1									5-11	TB301
X2-H		559 TERMINAL BOARD: 599M-ST-5 (75382)	1	EA	3									5-9 5-10	TB401, TB402 TB403
M-H		560 TERMINAL BOARD: 669 (06540)	1	EA	2									5-12 5-10	TB405 TB408
M-H		561 TERMINAL BOARD: 797 (06540)	1	EA	1									5-11	TB406
P-H	5950-757-7700	562 TRANSFORMER, HIGH VOLTAGE: 170A11BN (28480)	1	EA	1				*	*	2	8	4	5-9	T301
P-H		563 TRANSFORMER, HIGH VOLTAGE: 20800-321 (28569)	2	EA	1				*	*	2	8	4	5-9	T301
P-H	5950-504-6505	564 TRANSFORMER, POWER, STEP-DOWN AND STEP-UP: 9463 (98734)	1	EA	1				*	*	*	5	3	5-9	T401
P-H	5950-795-9383	565 TRANSFORMER, POWER, STEP-DOWN AND STEP-UP: 20800-259 (28569)	2	EA	1				*	*	*	5	3	5-9	T401
P-H	5960-806-5614	566 ELECTRON TUBE: SAME AS 42	1,2	EA	14				REF	REF	REF	REF	REF	5-6	V101, V103, V104, V105, V107, V113, V114, V115, V201, V202, V203, V206, V301, V306
P-H	5960-615-0243	567 ELECTRON TUBE: 6CL6 (81349)	1,2	EA	4				10	25	47	567	400	5-6	V109, V204, V205, V207
P-H	5960-669-6861	568 ELECTRON TUBE: 6005/6AQ5W (81349)	1,2	EA	1				2	2	3	59	100	5-6	V304
P-H	5960-881-6636	569 ELECTRON TUBE: 5BHP2A (81349)	1,2	EA	1				2	4	8	101	100	5-6	V305
P-H	5960-262-0185	570 ELECTRON TUBE: 5726/6AL5W (81349)	1,2	EA	1				2	2	3	59	100	5-6	V307
P-H	5960-272-8553	571 ELECTRON TUBE: 1X2B (81349)	1,2	EA	4				6	16	29	352	400	5-6	V308 thru V311
P-H	5960-262-0286	572 ELECTRON TUBE: 5651WA (c 349)	1,2	EA	1				2	2	3	59	100	5-6	V401
P-H	6210-809-4274	573 LAMPHOLDER: LH74LC13RN (81349)	1,2	EA	1				*	*	2	10	3	5-13	XDS401

(1) SMR CODE	(2) FEDERAL STOCK NUMBER	(3) DESCRIPTION REFERENCE NUMBER & MFR. CODE		USABLE ON CODE	(4) UNIT OF MEAS	(5) QTY INC IN UNIT	(6) 30-DAY DS MAINT ALLOWANCE (a) 1-20	(b) 21-50	(c) 51-100	(7) 30-DAY GS MAINT ALLOWANCE (a) 1-20	(b) 21-50	(c) 51-100	(8) 1 YR ALW PER EQUIP CNTGCY	(9) DEPOT MAINT ALW PER 100 EQUIP	(10) ILLUSTRATIONS (a) FIG NO.	(b) ITEM NO. OR REFERENCE DESIGNATION
A-H		574	LAMPHOLDER ASSEMBLY: 1450-0024-9 (28480)	1,2	EA	1									5-9	XDS403 thru XDS406
P-H	6250-283-9741	575	LAMPHOLDER: MS90282-3 (81349)	1,2	EA	4				*	2	2	16	12	5-13	XDS1001
P-H	5920-660-6705	576	FUSEHOLDER: FD-1 (81349)	1,2	EA	6				*	2	2	13	12	5-11	XF401 thru XF406
P-H	5935-237-6457	577	SOCKET, ELECTRON TUBE: 9709-7 (72825)	1	EA	1				*	*	*	5	3	5-9	XV305
P-H	5935-052-2899	578	SOCKET, ELECTRON TUBE: 19351-25 (28569)	2	EA	1				*	*	*	5	3	5-9	XV305
P-C-S	6625-759-0741	579	OSCILLOSCOPE SUBASSEMBLY, VERTICAL CHANNEL DUAL TRACE PREAMPLIFIER MX-2930B/USM	1	EA	1				*	*	*	5	3	1-1	A5
P-C-S		579A	OSCILLOSCOPE SUBASSEMBLY, VERTICAL CHANNEL DUAL TRACE PREAMPLIFIER MX-2930C/USM	2	EA	1				*	*	*	5	3	1-1	A5
A-H		580	VERTICAL PRESENTATION SWITCH ASSEMBLY: 162A-19D(N) (28480)	1	EA	1									5-34	A500
P-H	5930-054-0358	581	VERTICAL PRESENTATION SWITCH ASSEMBLY: 19915-677 (28569)	2	EA	1				*	*	2	5	3	5-34	A500
P-H	5910-543-0823	582	CAPACITOR, FIXED, CERAMIC DIELECTRIC: SAME AS 112	1,2	EA	1				REF	REF	REF	REF	REF	5-34	C1587
P-H	5910-883-4781	583	CAPACITOR, FIXED, CERAMIC DIELECTRIC: SAME AS 301	1,2	EA	1				REF	REF	REF	REF	REF	5-34	C1591
P-H	5910-284-4756	584	CAPACITOR, VARIABLE, PLASTIC: 535-033 4R (72982)	1	EA	2				*	2	2	13	6	5-34	C1592, C1594
P-H	5910-823-1056	585	CAPACITOR, VARIABLE, PLASTIC: SK1459-000 (72982)	2	EA	2				*	2	2	13	16	5-34	C1592, C1594
P-H	5910-993-8367	586	CAPACITOR, FIXED, CERAMIC DIELECTRIC: SAME AS 10	1,2	EA	1				REF	REF	REF	REF	REF	5-34	C1593
P-H	5905-726-5346	587	RESISTOR, FIXED, COMPOSITION: RC07GF182K (81349)	1	EA	1				*	*	*	5	3	5-34	R553
P-H	5905-717-3342	588	RESISTOR, FIXED, FILM: RL20S182J (81349)	2	EA	1				*	*	*	5	3	5-34	R553
P-H	5905-726-5343	589	RESISTOR, FIXED, COMPOSITION: RC07GF152K (81349)	1	EA	1				*	*	*	5	3	5-34	R561
P-H	5905-279-1757	590	RESISTOR, FIXED, COMPOSITION: SAME AS 144	2	EA	1				REF	REF	REF	REF	REF	5-34	R561
P-H	5905-279-3513	591	RESISTOR, FIXED, COMPOSITION: SAME AS 130	1,2	EA	1				REF	REF	REF	REF	REF	5-34	R1551
P-H	5905-752-6396	592	RESISTOR, FIXED, COMPOSITION: EB4R75 (01121)	1,2	EA	1				*	*	2	10	6	5-34	R1552
P-H	5905-883-9198	593	RESISTOR, FIXED, FILM: RN65D1001F (81349)	1,2	EA	1				*	*	2	10	6	5-34	R1553
P-H	5905-892-6475	594	RESISTOR, FIXED, FILM: SAME AS 266	1,2	EA	1				REF	REF	REF	REF	REF	5-34	R1560
P-H	5905-192-0390	595	RESISTOR, FIXED, COMPOSITION: SAME AS 24	1,2	EA	2				REF	REF	REF	REF	REF	5-34	R1561, R1563
P-H	5905-279-1754	596	RESISTOR, FIXED, COMPOSITION: SAME AS 165	1,2	EA	2				REF	REF	REF	REF	REF	5-34	R1564, R1568
P-H	5930-757-7702	597	SWITCH, ROTARY: 3100-0784-9 (28480)	1	EA	2				*	2	2	13	6	5-33	S502, S504
P-H	5930-795-9386	597A	SWITCH, ROTARY: 19912-523 (28569)	2	EA	2				*	2	2	13	10	5-33	S502, S504
P-H	5930-757-3080	598	SWITCH, ROTARY: 3100-0785-9 (28480)	1	EA	1				*	*	2	8	3	5-34	S505

(1) SMR CODE	(2) FEDERAL STOCK NUMBER	(3) DESCRIPTION REFERENCE NUMBER & MFR. CODE		USABLE ON CODE	(4) UNIT OF MEAS	(5) QTY INC IN UNIT	(6) 30-DAY DS MAINT ALLOWANCE (a) 1-20	(b) 21-50	(c) 51-100	(7) 30-DAY GS MAINT ALLOWANCE (a) 1-20	(b) 21-50	(c) 51-100	(8) 1 YR ALW PER EQUIP CNTGCY	(9) DEPOT MAINT ALW PER 100 EQUIP	(10) ILLUSTRATIONS (a) FIG NO.	(b) ITEM NO. OR REFERENCE DESIGNATION
A-H		599	DUAL CHANNEL VERTICAL AMPLIFIER ETCHED CIRCUIT ASSEMBLY: 162A-65E(N) (28480)	1	EA	1									5-31	A501
A-H		600	DUAL CHANNEL VERTICAL AMPLIFIER ETCHED CIRCUIT ASSEMBLY: 2420-748 (28569)	2	EA										5-31	A501
P-H	5910-993-8367	601	CAPACITOR, FIXED, CERAMIC DIELECTRIC: SAME AS 10	1,2	EA	3				REF	REF	REF	REF	REF	5-31	C503,C504,C516
P-H	5910-688-2822	602	CAPACITOR, FIXED, PAPER DIELECTRIC: CP05A1KB104K3 (81349)	1,2	EA	2				*	2	2	13	6	5-31	C517,C518
P-H	5910-822-5682	603	CAPACITOR, FIXED, CERAMIC DIELECTRIC: SAME AS 96	1,2	EA	2				REF	REF	REF	REF	REF	5-31	C522,C523
P-H	5961-814-0768	604	SEMICONDUCTOR DEVICE, DIODE: SAME AS 124	1,2	EA	2				REF	REF	REF	REF	REF	5-31	CR501,CR505
P-H	5950-504-6510	605	COIL, RADIOFREQUENCY: C577 (95265)	1,2	EA	4				*	2	2	19	12	5-31	L501,L502,L511,L512
P-H	5950-823-1209	606	COIL, RADIOFREQUENCY: MS16222-9 (81349)	1	EA	4				*	2	2	19	12	5-31	L503,L505,L508,L510
P-H	5950-701-5926	607	COIL, RADIOFREQUENCY: SAME AS 21	2	EA	4				REF	REF	REF	REF	REF	5-31A	L503,L505,L508,L510
P-H	5950-754-9896	608	COIL, RADIOFREQUENCY: SAME AS 16	1	EA	4				REF	REF	REF	REF	REF	5-31	L514,L515,L518,L519
P-H	5950-053-8245	609	COIL, RADIOFREQUENCY: SAME AS 17	2	EA	4				REF	REF	REF	REF	REF	5-31A	L514,L515,L518,L519
P-H	5950-752-3549	610	COIL, RADIOFREQUENCY: MS75008-3 (81349)	1	EA	2				*	2	2	13	6	5-31	L516,L517
P-H	5950-892-8209	611	COIL, RADIOFREQUENCY: MS75008-23 (81349)	2	EA	2				*	2	2	13	6	5-31A	L516,L517
P-H	5961-062-2320	612	TRANSISTOR: SAME AS 235	1,2	EA	4				REF	REF	REF	REF	REF	5-31	Q501,Q502,Q503,Q504
P-H	5905-299-2022	613	RESISTOR, FIXED, COMPOSITION: SAME AS 397	1,2	EA	4				REF	REF	REF	REF	REF	5-31	R501,R502,R548,R549
P-H	5905-755 0797	614	RESISTOR, FIXED, COMPOSITION: RC07GF560K (81349)	1	EA	8				2	2	3	40	39	5-31	R503,R505,R527,R528, R545.R547,R550,R551
P-H	5905-802-6730	615	RESISTOR, FIXED, COMPOSITION: SAME AS 66	2	EA	8				REF	REF	REF	REF	REF	5-31A	R503,R505,R527,R528, R545,R547,R550,R551
P-H	5905-715-0770	616	RESISTOR, FIXED, FILM: SAME AS 78	1,2	EA	8				REF	REF	REF	REF	REF	5-31	R507,R509,R519,R521, R529,R531,R542,R544
P-H	5905-809-4788	617	RESISTOR, VARIABLE: RWF2-90 (71450)	1,2	EA	1				*	*	2	10	8	5-31	R510A/B
P-H	5905-766-8362	618	RESISTOR, VARIABLE, WIREWOUND: RL20S303J (81349)	1,2	EA	4				*	2	2	16	12	5-31	R512,R513,R538,R539
P-H	5905-171-1986	619	RESISTOR, FIXED, COMPOSITION: SAME AS 182	1	EA	2				REF	REF	REF	REF	REF	5-31	R514,R537
P-H	5905-767-7594	620	RESISTOR, FIXED, FILM: SAME AS 183	2	EA	2				REF	REF	REF	REF	REF	5-31A	R514,R537
P-H	5905-195-6741	621	RESISTOR, FIXED, COMPOSITION: SAME AS 166	1	EA	2				REF	REF	REF	REF	REF	5-31	R515,R536
P-H	5905-775-0637	622	RESISTOR, FIXED, FILM: RL20S272J (81349)	2	EA	2				*	2	2	13	10	5-31A	R515,R536
P-H	5905-726-5328	623	RESISTOR, FIXED, FILM: RN60B1301F (81349)	1	EA	4				*	2	2	16	12	5-31	R516,R517,R534,R535
P-H	5905-800-8321	624	RESISTOR, FIXED, FILM: RN60D1271F (81349)	2	EA	4				*	2	2	16	12	5-31A	R516,R517,R534,R535

(1) SMR CODE	(2) FEDERAL STOCK NUMBER	(3) DESCRIPTION REFERENCE NUMBER & MFR. CODE	USABLE ON CODE	(4) UNIT OF MEAS	(5) QTY INC IN UNIT	(6) 30-DAY DS MAINT ALLOWANCE (a) 1-20	(b) 21-50	(c) 51-100	(7) 30-DAY GS MAINT ALLOWANCE (a) 1-20	(b) 21-50	(c) 51-100	(8) 1 YR ALW PER EQUIP CNTGCY	(9) DEPOT MAINT ALW PER 100 EQUIP	(10) ILLUSTRATIONS (a) FIG NO.	(b) ITEM NO. OR REFERENCE DESIGNATION
P-H	5905-583-6233	625 RESISTOR, FIXED, FILM: RN65B1502F (81349)	1	EA	4				*	2	2	16	12	5-31	R518, R522, R532, R533
P-H	5905-855-7207	626 RESISTOR, FIXED, FILM: RN65D1472F (81349)	2	EA	4				*	2	2	16	12	5-31A	R518, R522, R532, R533
P-H	5905-557-2422	627 RESISTOR, FIXED, FILM: SAME AS 92	1	EA	4				REF	REF	REF	REF	REF	5-31	R523, R524, R584, R585
P-H	5905-936-1540	628 RESISTOR, FIXED, FILM: RN75C4931D (81349)	2	EA	4				*	2	2	16	12	5-31A	R523, R524, R584, R585
P-H	5905-817-7971	629 RESISTOR, FIXED, COMPOSITION: SAME AS 75	1,2	EA	2				REF	REF	REF	REF	REF	5-31	R525, R576
P-H	5905-764-7690	630 RESISTOR, FIXED, FILM: RL42S202J (81349)	1,2	EA	1				*	*	*	5	3	5-31	R552
P-H	5905-726-6433	631 RESISTOR, FIXED, COMPOSITION: RC07GF222K (81349)	1	EA	4				*	2	2	16	12	5-31	R571 thru R574
P-H	5905-683-7723	632 RESISTOR, FIXED, COMPOSITION: RC07GF152K (81349)	2	EA	4				*	2	2	16	12	5-31A	R571 thru R574
P-H	5905-818-7071	633 RESISTOR, FIXED, WIREWOUND: RW55GR471 (81349)	1,2	EA	1				*	*	*	5	3	5-31	R575
P-H	5905-185-6575	634 RESISTOR, FIXED, COMPOSITION: RC20GF392K (81349)	1	EA	2				*	*	2	10	6	5-31	R580, R581
P-H	5905-767-3229	635 RESISTOR, FIXED, FILM: RL20S392J (81349)	2	EA	2				*	*	2	10	6	5-31A	R580, R581
P-H	5905-683-2235	636 RESISTOR, FIXED, COMPOSITION: RC07GF680J (81349)	1,2	EA	4				*	2	2	16	12	5-31	R582, R583, R588, R589
P-H	5905-192-3973	637 RESISTOR, FIXED, COMPOSITION: SAME AS 27	1	EA	2				REF	REF	REF	REF	REF	5-31	R586, R587
P-H	5905-279-3513	638 RESISTOR, FIXED, COMPOSITION: SAME AS 130	2	EA	2				REF	REF	REF	REF	REF	5-31A	R586, R587
P-H	5935-808-9569	639 SOCKET, ELECTRON TUBE: SAME AS 43	1	EA	4				REF	REF	REF	REF	REF	5-31	XV501, XV502, XV504, XV505
P-H	5935-990-2827	640 SOCKET, ELECTRON TUBE: SAME AS 44	2	EA	4				REF	REF	REF	REF	REF	5-31A	XV501, XV502, XV504, XV505
P-H	5935-849-9455	641 SOCKET, ELECTRON TUBE: SAME AS 45	1,2	EA	2				REF	REF	REF	REF	REF	5-31	XV503, XV506
A-H		642 VERTICAL SWITCHING ETCHED CIRCUIT ASSEMBLY: 162A-65F(N) (28480)	1	EA	1									5-32	A502
A-H		643 VERTICAL SWITCHING ETCHED CIRCUIT ASSEMBLY: 2420-747 (28569)	2	EA	1									5-32A	A502
P-H	5910-993-8367	644 CAPACITOR, FIXED, CERAMIC DIELECTRIC: SAME AS 10	1,2	EA	6				REF	REF	REF	REF	REF	5-32	C506, C507, C508, C511, C515, C519
P-H	5910-578-5543	645 CAPACITOR, VARIABLE, CERAMIC DIELECTRIC: SAME AS 51	1,2	EA	2				REF	REF	REF	REF	REF	5-32	C509, C510
P-H	5961-814-0768	646 SEMICONDUCTOR DEVICE, DIODE: SAME AS 124	1,2	EA	3				REF	REF	REF	REF	REF	5-32	CR502, CR503, CR504
P-H	5961-892-0748	647 SEMICONDUCTOR DEVICE, DIODE: 1N979B (81349)	1,2	EA	1				*	*	2	8	3	5-32	CR506
P-H	5950-802-0913	648 COIL, RADIOFREQUENCY: SAME AS 307	1	EA	1				REF	REF	REF	REF	REF	5-32	L513
P-H	5950-880-0347	649 COIL, RADIOFREQUENCY: SAME AS 308	2	EA	1				REF	REF	REF	REF	REF	5-32A	L513
P-H	5905-171-1986	650 RESISTOR, FIXED, COMPOSITION: SAME AS 182	1	EA	1				REF	REF	REF	REF	REF	5-32	R526
P-H	5905-767-7594	651 RESISTOR, FIXED, FILM: SAME AS 183	2	EA	1				REF	REF	REF	REF	REF	5-32A	R526
P-H	5905-755-0797	652 RESISTOR, FIXED, COMPOSITION: SAME AS 614	1	EA	4				REF	REF	REF	REF	REF	5-32	R554, R558, R564, R567

(1) SMR CODE	(2) FEDERAL STOCK NUMBER	(3) DESCRIPTION REFERENCE NUMBER & MFR. CODE		USABLE ON CODE	(4) UNIT OF MEAS	(5) QTY INC IN UNIT	(6) 30-DAY DS MAINT ALLOWANCE (a) 1-20	(b) 21-50	(c) 51-100	(7) 30-DAY GS MAINT ALLOWANCE (a) 1-20	(b) 21-50	(c) 51-100	(8) 1 YR ALW PER EQUIP CNTGCY	(9) DEPOT MAINT ALW PER 100 EQUIP	(10) ILLUSTRATIONS (a) FIG NO.	(b) ITEM NO. OR REFERENCE DESIGNATION
P-H	5905-802-6730	653	RESISTOR, FIXED, COMPOSITION: SAME AS 66	2	EA	4				REF	REF	REF	REF	REF	5-32A	R554, R558, R564, R567
P-H	5905-254-9201	654	RESISTOR, FIXED, COMPOSITION: SAME AS 97	1,2	EA	1				REF	REF	REF	REF	REF	5-32	R555
P-H	5905-804-6099	655	RESISTOR, FIXED, FILM: SAME AS 133	1,2	EA	1				REF	REF	REF	REF	REF	5-32	R556
P-H	5905-299-2025	656	RESISTOR, FIXED, COMPOSITION: SAME AS 168	1,2	EA	1				REF	REF	REF	REF	REF	5-32	R557
P-H	5905-192-0390	657	RESISTOR, FIXED, COMPOSITION: SAME AS 24	1,2	EA	1				REF	REF	REF	REF	REF	5-32	R559
P-H	5905-185-8516	658	RESISTOR, FIXED, COMPOSITION: SAME AS 247	1,2	EA	1				REF	REF	REF	REF	REF	5-32	R560
P-H	5905-767-6832	659	RESISTOR, FIXED, FILM: SAME AS 29	1,2	EA	2				REF	REF	REF	REF	REF	5-32	R562, R569
P-H	5905-552-3522	660	RESISTOR, FIXED, FILM: RN70B1823F (81349)	1	EA	4				*	2	2	16	12	5-32	R563, R565, R566, R568
P-H	5905-984-1993	661	RESISTOR, FIXED, FILM: RN70C1803D (81349)	2	EA	4				*	2	2	16	12	5-32A	R563, R565, R566, R568
P-H	5905-914-6435	662	RESISTOR, FIXED, FILM: SAME AS 323	1,2	EA	1				REF	REF	REF	REF	REF	5-32	R570
P-H	5905-195-6806	663	RESISTOR, FIXED, COMPOSITION: SAME AS 34	1,2	EA	1				REF	REF	REF	REF	REF	5-32	R579
P-H	5905-190-8880	664	RESISTOR, FIXED, COMPOSITION: RC20GF122J (81349)	1,2	EA	2				*	*	2	10	6	5-32	R591, R592
P-H	5905-192-3973	665	RESISTOR, FIXED, COMPOSITION: SAME AS 27	1,2	EA	1				REF	REF	REF	REF	REF	5-32	R593
P-H	6240-539-8959	666	LAMP, GLOW: SAME AS 85	1,2	EA	1				REF	REF	REF	REF	REF	5-32	V509
P-H	5935-763-2258	667	SOCKET, ELECTRON TUBE: 121-51-11-124 (71785)	1	EA	2				*	*	2	10	6	5-32	XV507, XV508
P-H	5935-841-7102	668	SOCKET, ELECTRON TUBE: 121-51-11-079 (71785)	2	EA	2				*	*	2	10	16	5-32A	XV507, XV508
A-H		669	VERNIER/SENSITIVITY SWITCH ASSEMBLY: 162A-34C(N) (28480)	1	EA	1									5-33	A503
A-H		670	VERNIER/SENSITIVITY SWITCH ASSEMBLY: 1920-30 (28569)	2	EA	1									5-33	A503
P-H	5930-057-5260	671	SWITCH ASSEMBLY: 19915-678 (28569)	2	EA	2				*	2	2	8	5	5-33	A1502, A1503
P-H	5910-728-2144	672	CAPACITOR, FIXED, PLASTIC DIELECTRIC: SAME AS 201	1	EA	2				REF	REF	REF	REF	REF	5-33	C1501, C1502
P-H	5910-976-3686	673	CAPACITOR, FIXED, PLASTIC DIELECTRIC: SAME AS 202	2	EA	2				REF	REF	REF	REF	REF	5-46A	C1501, C1502
P-H	5910-577-7925	674	CAPACITOR, FIXED, CERAMIC DIELECTRIC: CC20CH200G (81349)	1	EA	2				*	2	2	13	10	5-33	C1503, C1546
P-H	5910-926-8036	675	CAPACITOR, FIXED, CERAMIC DIELECTRIC: 301-651C0H829C (72982)	1	EA	8				2	2	3	32	40	5-46A	C1500, C1543, C1546, C1549
															5-33	C1589
				2	EA	7				*	2	2	26	35	5-33	C1503, C1506, C1589
P-H	5910-275-6419	676	CAPACITOR, VARIABLE, PLASTIC DIELECTRIC: SAME AS 48	1,2	EA	37				REF	REF	REF	REF	REF	5-33	C1504, C1505, C1508, C1509, C1512, C1513, C1516, C1517, C1520, C1521, C1524, C1526, C1528, C1530, C1532, C1534, C1536, C1538, C1547, C1548, C1551, C1552, C1555, C1556, C1559, C1560, C1563, C1564, C1567, C1569, C1571, C1573, C1575, C1577, C1579, C1581, C1590

(1) SMR CODE	(2) FEDERAL STOCK NUMBER	(3) DESCRIPTION REFERENCE NUMBER & MFR. CODE		USABLE ON CODE	(4) UNIT OF MEAS	(5) QTY INC IN UNIT	(6) 30-DAY DS MAINT ALLOWANCE (a) 1-20	(b) 21-50	(c) 51-100	(7) 30-DAY GS MAINT ALLOWANCE (a) 1-20	(b) 21-50	(c) 51-100	(8) 1 YR ALW PER EQUIP CNTGCY	(9) DEPOT MAINT ALW PER 100 EQUIP	(10) ILLUSTRATIONS (a) FIG NO.	(b) ITEM NO. OR REFERENCE DESIGNATION
P-H	5910-195-5157	677	CAPACITOR, FIXED, CERAMIC DIELECTRIC: CC20CH100C (81349)	1	EA	16				2	3	5	48	48	5-33	C1506, C1507, C1518, C1522, C1525, C1529, C1533, C1537, C1549, C1550, C1561, C1565, C1568, C1572, C1576, C1580
				2	EA	14				2	2	3	43	42	5-33	C1507, C1518, C1522, C1525, C1529, C1533, C1537, C1550, C1561, C1565, C1568, C1572, C1576, C1580
P-H	5910-725-7647	678	CAPACITOR, FIXED, MICA DIELECTRIC: SAME AS 338	1,2	EA	2				REF	REF	REF	REF	REF	5-33	C1510, C1553
P-H	5910-556-9427	679	CAPACITOR, FIXED, CERAMIC DIELECTRIC: CC20CH050C (81349)	1,2	EA	4				*	2	2	19	12	5-33	C1511, C1514, C1554, C1557
P-H	5910-804-2377	680	CAPACITOR, FIXED, MICA DIELECTRIC: CM15C390JN3 (81349)	1,2	EA	4				*	2	2	16	12	5-33	C1515, C1519, C1558, C1562
P-H	5910-717-0169	681	CAPACITOR, FIXED, MICA DIELECTRIC: SAME AS 113	1,2	EA	2				REF	REF	REF	REF	REF	5-33	C1523, C1566
P-H	5910-893-7514	682	CAPACITOR, FIXED, MICA DIELECTRIC: CB11RD221J (81349)	1,2	EA	2				*	2	2	13	6	5-33	C1527, C1570
P-H	5910-816-9909	683	CAPACITOR, FIXED,MICA DIELECTRIC: CB11RD471 (81349)	1,2	EA	2				*	2	2	13	6	5-33	C1531, C1574
P-H	5910-990-6796	684	CAPACITOR, FIXED, MICA DIELECTRIC: CB11RE102G (81349)	1,2	EA	2				*	2	2	13	6	5-33	C1535, C1578
P-H	5910-806-3772	685	CAPACITOR, FIXED, MICA DIELECTRIC: M23-2000-E5-500V (00853)	1,2	EA	2				*	*	2	8	3	5-33	C1539, C1582
P-H	5910-543-0823	686	CAPACITOR, FIXED, CERAMIC DIELECTRIC: SAME AS 112	1,2	EA	4				REF	REF	REF	REF	REF	5-33	C1540, C1541, C1544, C1545
P-H	5910-883-4781	687	CAPACITOR, FIXED, CERAMIC DIELECTRIC: SAME AS 301	1,2	EA	2				REF	REF	REF	REF	REF	5-33	C1588, C1595
P-H	5905-809-4788	689	RESISTOR, VARIABLE: SAME AS 617	1,2	EA	1				REF	REF	REF	REF	REF	5-33	R540A/B
P-H	5905-894-3305	690	RESISTOR, FIXED, WIREWOUND: RW32G103 (81349)	1,2	EA	1				*	*	*	5	3	5-33	R590
P-H	5905-755-0797	691	RESISTOR, FIXED, COMPOSITION: SAME AS 614	1	EA	2				REF	REF	REF	REF	REF	5-33	R1500, R1530
P-H	5905-802-6730	692	RESISTOR, FIXED, COMPOSITION: SAME AS 66	2	EA	2				REF	REF	REF	REF	REF	5-33	R1500, R1530
P-H	5905-951-8520	693	RESISTOR, FIXED, FILM: RN65D6043F (81349)	1,2	EA	2				*	*	2	10	6	5-33	R1501, R1531
P-H	5905-951-4930	694	RESISTOR, FIXED, FILM: RN65D6653F (81349)	1,2	EA	4				*	*	2	10	6	5-33	R1502, R1532, R1533, R1534
P-H	5905-728-2774	695	RESISTOR, FIXED, FILM: RN65C7963D (81349)	1,2	EA	1				*	*	2	10	6	5-33	R1503
P-H	5905-814-3871	696	RESISTOR, FIXED, FILM: RN65D2493F (81349)	1,2	EA	1				*	*	2	10	6	5-33	R1504
P-H	5905-985-6059	697	RESISTOR, FIXED, FILM: SAME AS 225	1,2	EA	2				REF	REF	REF	REF	REF	5-33	R1505, R1535
P-H	5905-990-5020	698	RESISTOR, FIXED, FILM: SAME AS 226	1,2	EA	2				REF	REF	REF	REF	REF	5-33	R1506, R1536
P-H	5905-062-6661	699	RESISTOR, FIXED, FILM: RN65D9533F (81349)	1,2	EA	2				*	*	2	10	6	5-33	R1507, R1537
P-H	5905-577-7503	700	RESISTOR, FIXED, FILM: RN65B4122F (81349)	1	EA	2				*	*	2	10	6	5-33	R1508, R1538
P-H	5905-901-7883	701	RESISTOR, FIXED, FILM: RN65C4172D (81349)	2	EA	2				*	*	2	10	6	5-33	R1508, R1538

(1) SMR CODE	(2) FEDERAL STOCK NUMBER	(3) DESCRIPTION REFERENCE NUMBER & MFR. CODE	USABLE ON CODE	(4) UNIT OF MEAS	(5) QTY INC IN UNIT	(6) 30-DAY DS MAINT ALLOWANCE (a) 1-20	(b) 21-50	(c) 51-100	(7) 30-DAY GS MAINT ALLOWANCE (a) 1-20	(b) 21-50	(c) 51-100	(8) 1 YR ALW PER EQUIP CNTGCY	(9) DEPOT MAINT ALW PER 100 EQUIP	(10) ILLUSTRATIONS (a) FIG NO.	(b) ITEM NO. OR REFERENCE DESIGNATION
P-H	5905-983-5479	702 RESISTOR, FIXED, FILM: RN65D9763F (81349)	1,2	EA	2				*	*	2	10	6	5-33	R1509, R1539
P-H	5905-978-7402	703 RESISTOR, FIXED, FILM: RN65C2032D (81349)	1,2	EA	2				*	*	2	10	6	5-33	R1510, R1540
P-H	5905-892-6475	704 RESISTOR, FIXED, FILM: SAME AS 266	1,2	EA	9				REF	REF	REF	REF	REF	5-33	R1511, R1514, R1517, R1520, R1524, R1541, R1544, R1547, R1550
P-H	5905-817-7971	705 RESISTOR, FIXED, COMPOSITION: SAME AS 75	1,2	EA	6				REF	REF	REF	REF	REF	5-33	R1512, R1515, R1518, R1542, R1545, R1548
P-H	5905-810-0507	706 RESISTOR, FIXED, FILM: RN60C1022F (81349)	1	EA	2				*	*	2	10	6	5-33	R1513, R1543
P-H	5905-062-6290	707 RESISTOR, FIXED, FILM: RN65C1012D (81349)	2	EA	2				*	*	2	10	16	5-33	R1513, R1543
P-H	5905-969-5857	708 RESISTOR, FIXED, FILM: RN65D4021F (81349)	1,2	EA	2				*	*	2	10	6	5-33	R1516, R1546
P-H	5905-087-6524	709 RESISTOR, FIXED, FILM: RN65D2001F (81349)	1,2	EA	2				*	*	2	10	6	5-33	R1519, R1549
P-H	5905-279-3513	710 RESISTOR, FIXED, COMPOSITION: SAME AS 130	1,2	EA	1				REF	REF	REF	REF	REF	5-33	R1521
P-H	5905-752-6396	711 RESISTOR, FIXED, COMPOSITION: SAME AS 592	1,2	EA	1				REF	REF	REF	REF	REF	5-33	R1522
P-H	5905-883-9198	712 RESISTOR, FIXED, FILM: SAME AS 593	1,2	EA	1				REF	REF	REF	REF	REF	5-33	R1523
P-H	5930-861-0412	713 SWITCH, ROTARY: PA200 (71590)	1	EA	2				*	2	2	13	6	5-33	S501, S503
P-H	5930-795-9388	714 SWITCH, ROTARY: 19912-428 (28569)	2	EA	2				*	2	2	13	6	5-33	S501, S503
P-H	5930-757-7702	715 SWITCH, ROTARY: SAME AS 597	1	EA	1				REF	REF	REF	REF	REF	5-33	S504
P-H	5950-757-7703	716 TRANSFORMER, PULSE: 162A60AN (28480)	1	EA	1				*	*	*	5	3	5-33	T501
P-H	5950-795-9381	717 TRANSFORMER, PULSE: 20800-262 (28569)	2	EA	1				*	*	*	5	3	5-33	T501
P-H	5935-258-1767	718 COVER, ELECTRICAL CONNECTOR CW-123A/U: SAME AS 466	2	EA	2				REF	REF	REF	REF	REF	5-13	E501, E502
P-H	5935-843-9008	719 CONNECTOR, RECEPTACLE, ELECTRICAL: SAME AS 474	1	EA	2				REF	REF	REF	REF	REF	5-30	J501, J502
P-H	5935-552-7660	720 CONNECTOR, RECEPTACLE, ELECTRICAL UG-625B/U: SAME AS 475	2	EA	2				REF	REF	REF	REF	REF	5-30	J501, J502
P-H	5910-805-2327	721 KNOB: 0370-0037-9 (28480)	1	EA	2				*	*	2	10	6	5-30	MP505, MP506
P-H	5355-656-1322	722 KNOB: SAME AS 482	2	EA	4				REF	REF	REF	REF	REF	5-30	MP505, MP506, MP511, MP512
P-H	5355-688-6955	723 KNOB: SAME AS 483	1	EA	2				REF	REF	REF	REF	REF	5-30	MP507, MP508
P-H	5355-656-1319	724 KNOB: SAME AS 484	2	EA	4				REF	REF	REF	REF	REF	5-30	MP507, MP508, MP509, MP510
P-H	5355-965-4881	725 KNOB: SAME AS 485	1	EA	2				REF	REF	REF	REF	REF	5-30	MP509, MP510
P-H	5355-728-2881	726 KNOB: SAME AS 486	1	EA	2				REF	REF	REF	REF	REF	5-30	MP511, MP512
P-H	5355-682-3544	727 KNOB: SAME AS 492	1	EA	1				REF	REF	REF	REF	REF	5-30	MP513
P-H	5355-656-1318	728 KNOB: SAME AS 491	2	EA	3				REF	REF	REF	REF	REF	5-30	MP513, MP514, MP515
P-H	5355-725-3925	729 KNOB: 0370-0084-9 (28480)	1	EA	2				*	*	2	10	6	5-30	MP514, MP515
P-H	5355-809-9332	730 KNOB: 0370-0088-9 (28480)	1	EA	1				*	*	2	10	6	5-30	MP516
P-H	5960-686-8087	731 SHIELD, ELECTRON TUBE: TS103U02 (81349)	1,2	EA	2				*	*	*	5	3	5-30	MP517, MP518

(1) SMR CODE	(2) FEDERAL STOCK NUMBER	(3) DESCRIPTION REFERENCE NUMBER & MFR. CODE		USABLE ON CODE	(4) UNIT OF MEAS	(5) QTY INC IN UNIT	(6) 30-DAY DS MAINT ALLOWANCE (a) 1-20	(b) 21-50	(c) 51-100	(7) 30-DAY GS MAINT ALLOWANCE (a) 1-20	(b) 21-50	(c) 51-100	(8) 1 YR ALW PER EQUIP CNTGCY	(9) DEPOT MAINT ALW PER 100 EQUIP	(10) ILLUSTRATIONS (a) FIG NO.	(b) ITEM NO. OR REFERENCE DESIGNATION
P-H	5940-543-8538	732	INSULATOR, FEEDTHRU: SAME AS 497	2	EA	6				REF	REF	REF	REF	REF	5-30	MP520 thru MP525
P-H	5935-258-5811	733	CONNECTOR, RECEPTACLE, ELECTRICAL: 26-4100-16P (02660)	1,2	EA	1				*	*	*	5	3	5-30	P501
P-H	5905-643-5626	734	RESISTOR, VARIABLE: RV4NAYSD502A (81349)	1,2	EA	2				*	*	2	10	6	5-30	R504, R546
P-H	5905-539-5013	735	RESISTOR, VARIABLE: RV4NAYSD252A (81349)	1,2	EA	2				*	*	2	10	6	5-30	R508, R543
P-H	5930-757-3081	736	SWITCH, ROTARY: 3100-0786-9 (28480)	1	EA	2				*	2	2	13	6	5-30	S506, S507
P-H	5930-795-9384	737	SWITCH, ROTARY: 19912-522 (28569)	2	EA	2				*	2	2	13	6	5-30	S506, S507
P-H	5960-806-5614	738	ELECTRON TUBE: SAME AS 42	1,2	EA	8				REF	REF	REF	REF	REF	5-6	V501 thru V508
P-C-S	6625-961-5888	739	OSCILLOSCOPE SUBASSEMBLY, HORIZONTAL CHANNEL AUXILIARY PLUG-IN UNIT MX-3078/USM	1	EA	1				*	*	*	5	3	5-36	A2000
P-C-S		739A	OSCILLOSCOPE SUBASSEMBLY, HORIZONTAL CHANNEL AUXILIARY PLUG-IN UNIT MX-3078B/USM	2	EA	1				*	*	*	5	3	5-36	A2000
P-H	5910-993-8367	740	CAPACITOR, FIXED, CERAMIC DIELECTRIC: SAME AS 10	1,2	EA	1				REF	REF	REF	REF	REF	5-36	C2001
P-H	5961-814-0768	741	SEMICONDUCTOR DEVICE, DIODE: SAME AS 124	1,2	EA	1				REF	REF	REF	REF	REF	5-36	CR2001
P-H	6240-892-4420	742	LAMP, GLOW: SAME AS 462	1,2	EA	1				REF	REF	REF	REF	REF	5-36	DS2001
P-H	5935-258-1767	743	COVER, ELECTRICAL CONNECTOR CW-123A/U: SAME AS 466	1,2	EA	2				REF	REF	REF	REF	REF	5-36	E2001, E2002
P-H	5935-843-9008	744	CONNECTOR, RECEPTACLE, ELECTRICAL: SAME AS 474	1	EA	2				REF	REF	REF	REF	REF	5-36	J2001, J2002
P-H	5935-552-7660	745	CONNECTOR, RECEPTACLE, ELECTRICAL: SAME AS 475	2	EA	2				REF	REF	REF	REF	REF	5-36	J2001, J2002
P-H	5355-809-9332	746	KNOB: SAME AS 730	1	EA	1				REF	REF	REF	REF	REF	5-36	MP2001
P-H	5325-709-1480	747	LATCH, FASTENER: 48-20-101-10 (94222)	1,2	EA	1				*	*	*	5	3	5-36	MP2002
P-H	5935-201-6511	748	CONNECTOR, RECEPTACLE, ELECTRICAL: 26-4100-32P (02660)	1,2	EA	1				*	*	*	5	3	5-36	P2001
P-H	5905-192-0390	749	RESISTOR, FIXED, COMPOSITION: SAME AS 24	1,2	EA	1				REF	REF	REF	REF	REF	5-36	R2001
P-H	5930-655-1515	750	SWITCH, TOGGLE: MS35058-23 (81349)	1	EA	1				*	*	2	8	3	5-36	S2001
P-H	5930-655-1508	751	SWITCH, TOGGLE: MS35058-23 (81349)	2	EA	2				*	*	2	8	3	5-36	S2001, S2002
P-H	5930-655-1582	752	SWITCH, TOGGLE: MS35059-23 (81349)	1	EA	1				*	*	2	8	3	5-36	S2002
M-H		753	TERMINAL BOARD: SAME AS 561	1	EA	1									5-36	TB2001
M-H		754	TERMINAL BOARD: 1542A (71785)	2	EA	1									5-36	TB2001
P-H	6210-809-4274	755	LAMPHOLDER: SAME AS 573	1	EA	1				REF	REF	REF	REF	REF	5-36	XDS2001
P-H	6210-078-7626	756	LIGHT, INDICATOR: LH74LC13CN (81349)	2	EA	1				*	*	2	8	5	5-36	XDS2001
P-O	6625-072-5227	757	TEST PROD MX-2817/U	1	EA	2				*	*	2	8	4	5-35	A601, A602
P-O	6625-758-4949	758	GROUND CABLE: 5060-0401 (28480)	1	EA	2				*	2	2	8	4	5-35	W603, W604
P-O	6625-973-4775	759	PROD, TEST MX-4073A/U	2	EA	2				*	*	*	5	6	5-35A	

(1) SMR CODE	(2) FEDERAL STOCK NUMBER	(3) DESCRIPTION REFERENCE NUMBER & MFR. CODE	USABLE ON CODE	(4) UNIT OF MEAS	(5) QTY INC IN UNIT	(6) 30-DAY DS MAINT ALLOWANCE (a) 1-20	(b) 21-50	(c) 51-100	(7) 30-DAY GS MAINT ALLOWANCE (a) 1-20	(b) 21-50	(c) 51-100	(8) 1 YR ALW PER EQUIP CNTGCY	(9) DEPOT MAINT ALW PER 100 EQUIP	(10) ILLUSTRATIONS (a) FIG NO.	(b) ITEM NO. OR REFERENCE DESIGNATION
P-O		760 NUT, LOCKING: 6115-3 (28569)	2	EA	1				*	*	*	4	3	5-35A	E702
P-O	6625-167-9297	761 PROBE, TIP: 16975-54 (28569)	2	EA	1				*	*	*	5	3	5-35A	E703
P-O	6625-167-9798	762 PROBE, TIP: 16975-62 (28569)	2	EA	1				*	*	*	5	3	5-35A	E704
P-O	5935-502-0342	763 PROBE, TIP: 100 (83330)	2	EA	1				*	*	*	5	3	5-35A	E704
P-O	6625-167-9793	764 PROBE, TIP: 16970-63 (28569)	2	EA	1				*	*	*	5	3	5-35A	E706
P-O	6625-167-9794	765 PROBE,TIP: 16970-64 (28569)	2	EA	1				*	*	*	5	3	5-35A	E707
P-O	6625-167-9795	766 PROBE, TIP: 16970-75 (28569)	2	EA	1				*	*	*	5	3	5-35A	E708
P-O	6625-453-5650	767 CABLE ASSEMBLY: 3030-163 (28569)	2	EA	1				*	*	*	5	3	5-35A	W701
P-O	6625-436-1588	768 LEAD, GROUND: 3030-164 (28569)	2	EA	1				*	*	*	5	3	5-35A	W701

SECTION VII. INDEX-FEDERAL STOCK NUMBER CROSS REFERENCE

TO FIGURE AND ITEM NUMBER OR REFERENCE DESIGNATION (CONTINUED)

FEDERAL STOCK NUMBER	FIGURE NUMBER	ITEM NUMBER OR REF. DESIGNATION
4110-727-8796	2-2	MP147
4140-050-6356	5-12	MP419
4450-801-4051	5-12	MP419
5325-709-1480	5-36	MP2002
5330-917-7011	1-1	MP609
5355-656-1318	5-13	MP301
5355-656-1318	5-13	MP302
5355-656-1318	5-13	MP303
5355-656-1318	5-13	MP304
5355-656-1318	5-13	MP402
5355-656-1318	5-30	MP513
5355-656-1318	5-30	MP514
5355-656-1318	5-30	MP515
5355-656-1319	5-13	MP103
5355-656-1319	5-13	MP104
5355-656-1319	5-13	MP105
5355-656-1319	5-13	MP203
5355-656-1319	5-30	MP507
5355-656-1319	5-30	MP508
5355-656-1319	5-30	MP509
5355-656-1319	5-30	MP510
5355-656-1321	5-13	MP201
5355-656-1322	5-13	MP101
5355-656-1322	5-13	MP102
5355-656-1322	5-13	MP106
5355-656-1322	5-13	MP202
5355-656-1322	5-30	MP505
5355-656-1322	5-30	MP506
5355-656-1322	5-30	MP511
5355-656-1322	5-30	MP512
5355-682-3543	5-13	MP301
5355-682-3543	5-13	MP302
5355-682-3543	5-13	MP303
5355-682-3543	5-13	MP402
5355-682-3544	5-13	MP304
5355-682-3544	5-30	MP513
5355-688-6955	5-13	MP103
5355-688-6955	5-30	MP507
5355-688-6955	5-30	MP508
5355-725-3925	5-30	MP514
5355-725-3925	5-30	MP515
5355-728-2881	5-13	MP106
5355-728-2881	5-30	MP511
5355-728-2881	5-30	MP512
5355-737-4883	5-13	MP101
5355-737-4883	5-13	MP102
5355-737-4883	5-13	MP202
5355-755-6804	5-13	MP201
5355-809-9332	5-30	MP516
5355-809-9332	5-36	MP2001
5355-965-4881	5-13	MP104
5355-965-4881	5-13	MP105
5355-965-4881	5-13	MP203
5355-965-4881	5-30	MP509
5355-965-4881	5-30	MP510
5905-050-1128	5-25	R349
5905-050-1128		R354
5905-054-0349	5-13	R216
5905-054-0399	5-17A	R169
5905-056-6269	5-18A	R1011
5905-057-9659	5-18	R1015
5905-057-9659	5-18	R1016
5905-062-0539	5-17A	R146
5905-062-1496	5-15A	R50
5905-062-1496	5-15A	R52
5905-062-1496	5-15A	R67
5905-062-1496	5-15A	R68
5905-062-6290	5-33	R1513
5905-062-6290	5-33	R1543
5905-062-6661	5-33	R1507
5905-062-6661	5-33	R1537
5905-069-4508	5-17	R119
5905-069-4508	5-17	R141
5905-069-9928	5-15	R55
5905-069-9928	5-15	R70
5905-078-6916	5-21	R238
5905-078-6916	5-21	R239
5905-078-6916	5-21	R240
5905-078-6916	5-21	R241
5905-078-8756	5-15A	R56
5905-078-8756	5-15A	R71
5905-078-8801	5-27	R359
5905-078-8810	5-21	R233
5905-078-8810	5-25	R344
5905-079-4448	5-17	R160
5905-087-6524	5-33	R1519
5905-087-6524	5-33	R1549
5905-088-5936	5-25	R350
5905-100-7936	5-11	R265
5905-100-7936	5-11	R270
5905-102-2740	5-27	R366
5905-171-1976	5-17A	R135
5905-171-1976	5-17A	R138
5905-171-1976	5-17	R179
5905-171-1976	5-24	R208
5905-171-1976	5-10	R422
5905-171-1976	5-10	R440
5905-171-1986	5-17	R180
5905-171-1986	5-11	R400
5905-171-1986	5-44A	R400
5905-171-1986	5-31	R514
5905-171-1986	5-32	R526
5905-171-1986	5-31	R537
5905-171-1998	5-14	R41
5905-171-1998	5-27	R355
5905-171-1998	5-10	R401
5905-171-2000	5-14	R36
5905-171-2004	5-19	R161
5905-171-2004	5-17	R176
5905-185-6575	5-31	R580
5905-185-6575	5-31	R581
5905-185-8510	5-19	R102
5905-185-8510	5-12	R310
5905-185-8510	5-27	R327
5905-185-8516	5-23	R254
5905-185-8516	5-23	R255
5905-185-8516	5-32	R560
5905-190-8880	5-32	R591
5905-190-8880	5-32	R592
5905-190-8882	5-10	R401
5905-190-8883	5-14	R40
5905-190-8889	5-17	R188
5905-190-8889	5-17	R190
5905-190-8889	5-24	R207
5905-190-8889	5-29	R409
5905-192-0390	5-14	R2
5905-192-0390	5-14	R4
5905-192-0390	5-14	R19
5905-192-0390	5-14	R22
5905-192-0390	5-14	R26
5905-192-0390	5-14	R30
5905-192-0390	5-20	R103
5905-192-0390	5-17	R115
5905-192-0390	5-17	R133
5905-192-0390	5-26	R305
5905-192-0390	5-12	R311
5905-192-0390	5-32	R559
5905-192-0390	5-34	R1561

FEDERAL STOCK NUMBER	FIGURE NUMBER	ITEM NUMBER OR REF. DESIGNATION
5905-192-0390	5-34	R1563
5905-192-0390	5-36	R2001
5905-192-0626	5-17	R135
5905-192-0626	5-17	R138
5905-192-0626	5-24	R208
5905-192-0626	5-10	R422
5905-192-0626	5-10	R440
5905-192-0662	5-17	R168
5905-192-0662	5-18	R1006
5905-192-0662	5-18	R1007
5905-192-0667	5-17A	R168
5905-192-0667	5-23	R258
5905-192-3971	5-29A	R425
5905-192-3972	5-23	R271
5905-192-3973	5-14	R8
5905-192-3973	5-14	R9
5905-192-3973	5-14	R32
5905-192-3973	5-17A	R153
5905-192-3973	5-27A	R325
5905-192-3973	5-31	R586
5905-192-3973	5-31	R587
5905-192-3973	5-32	R593
5905-192-4490	5-29	R417
5905-195-5571	5-17A	R108
5905-195-6741	5-17	R158
5905-195-6741	5-23	R272
5905-195-6741	5-31	R518
5905-195-6741	5-31	R536
5905-195-6752	5-17	R144
5905-195-6752	5-23	R268
5905-195-6752	5-23A	R268
5905-195-6752	5-26	R336
5905-195-6754	5-26A	R302
5905-195-6756	5-26	R302
5905-195-6761	5-24	R206
5905-195-6761	5-23	R244
5905-195-6761	5-23	R264
5905-195-6761	5-26	R309
5905-195-6761	5-27	R364
5905-195-6791	5-29	R451
5905-195-6799	5-17	R153
5905-195-6799	5-27	R325
5905-195-6806	5-14	R29
5905-195-6806	5-14	R172
5905-195-6806	5-26	R308
5905-195-6806	5-32	R579
5905-249-3663	5-10	R402
5905-249-4195	5-17A	R125
5905-249-4227	5-17	R182
5905-249-4243	5-24	R217
5905-252-4018	5-14	R1
5905-252-4018	5-14	R3
5905-252-4018	5-14	R18
5905-252-4018	5-14	R21
5905-252-4018	5-17	R117
5905-252-4018	5-17	R122
5905-252-4018	5-17	R124
5905-252-4018	5-17	R136
5905-252-4018	5-17	R140
5905-252-4018	5-17	R143
5905-252-4018	5-17	R150
5905-252-4018	5-17	R151
5905-252-4018	5-17	R154
5905-252-4018	5-17	R155
5905-252-4018	5-17	R167
5905-252-4018	5-17	R173
5905-252-4018	5-17	R175
5905-252-4018	5-17	R181
5905-252-4018	5-17	R186
5905-252-4018	5-17	R187
5905-252-4018	5-17	R189
5905-252-4018	5-24A	R214
5905-252-4018	5-24A	R218
5905-252-4018	5-24A	R224
5905-252-4018	5-23A	R249
5905-252-4018	5-23A	R253
5905-252-4018	5-23A	R256
5905-252-4018	5-23A	R257
5905-252-4018	5-23A	R266
5905-252-4018	5-23A	R269
5905-252-4018	5-24	R277
5905-252-4018	5-26A	R306
5905-252-4018	5-26	R337
5905-252-4018	5-26	R339
5905-252-4018	5-29	R463
5905-253-1229	5-10	R458
5905-254-7087	5-26	R303
5905-254-9201	5-9	R88
5905-254-9201	5-19	R101
5905-254-9201	5-20	R106
5905-254-9201	5-19	R164
5905-254-9201	5-26	R312
5905-254-9201	5-27	R334
5905-254-9201	5-32	R555
5905-257-0926	5-14	R39
5905-257-0926	5-23	R278
5905-257-0937	5-17A	R144
5905-257-0937	5-23	R274
5905-257-0937	5-23	R275
5905-259-2990	5-17	R165
5905-279-1697	5-27	R326
5905-279-1723	5-14	R28
5905-279-1754	5-17	R156
5905-279-1754	5-27	R332
5905-279-1754	5-26	R338
5905-279-1754	5-26	R340
5905-279-1754	5-34	R1564
5905-279-1754	5-34	R1568
5905-279-1757	5-17	R123
5905-279-1757	5-17A	R123
5905-279-1757	5-17	R125
5905-279-1757	5-23A	R272
5905-279-1757	5-34	R561
5905-279-1876	5-14	R25
5905-279-1876	5-17	R132
5905-279-1876	5-17A	R158
5905-279-1883	5-18	R1001
5905-279-1898	5-17	R108
5905-279-1898	5-17	R117
5905-279-1898	5-17	R122
5905-279-1898	5-17	R124
5905-279-1898	5-17	R136
5905-279-1898	5-17	R140
5905-279-1898	5-17	R143
5905-279-1898	5-17	R150
5905-279-1898	5-17	R151
5905-279-1898	5-17	R154
5905-279-1898	5-17	R155
5905-279-1898	5-17	R167
5905-279-1898	5-17	R173
5905-279-1898	5-17	R175
5905-279-1898	5-17	R181
5905-279-1898	5-17	R186
5905-279-1898	5-17	R187
5905-279-1898	5-17	R189
5905-279-1898	5-24	R214
5905-279-1898	5-24	R218
5905-279-1898	5-24	R224

SECTION VII. INDEX-FEDERAL STOCK NUMBER CROSS REFERENCE

TO FIGURE AND ITEM NUMBER OR REFERENCE DESIGNATION (CONTINUED)

FEDERAL STOCK NUMBER	FIGURE NUMBER	ITEM NUMBER OR REF. DESIGNATION
5905-279-1898	5-23	R249
5905-279-1898	5-23	R253
5905-279-1898	5-23	R256
5905-279-1898	5-23	R257
5905-279-1898	5-23	R266
5905-279-1898	5-23	R269
5905-279-1898	5-26	R306
5905-279-1900	5-27	R322
5905-279-1900	5-27	R323
5905-279-2298	5-27	R313
5905-279-2298	5-27	R314
5905-279-2298	5-27	R315
5905-279-2298	5-27	R316
5905-279-2298	5-27	R317
5905-279-2298	5-27	R318
5905-279-2298	5-27	R331
5905-279-2298	5-27	R333
5905-279-2298	5-27A	R334
5905-279-2303	5-17	R145
5905-279-2303	5-23	R276
5905-279-2504	5-26A	R338
5905-279-2504	5-26A	R340
5905-279-2514	5-18	R1005
5905-279-2515	5-20	R104
5905-279-2515	5-17	R116
5905-279-2515	5-17	R137
5905-279-2515	5-17	R157
5905-279-2515	5-26	R304
5905-279-2515	5-18A	R1005
5905-279-2527	5-17A	R182
5905-279-2528	5-17A	R145
5905-279-2616	5-17	R177
5905-279-2675	5-24A	R217
5905-279-3416	5-10	R423
5905-279-3416	5-10	R441
5905-279-3416	5-9	R457
5905-279-3494	5-17	R147
5905-279-3499	5-27	R328
5905-279-3499	5-27	R356
5905-279-3503	5-29	R447
5905-279-3504	5-23	R273
5905-279-3504	5-29	R459
5905-279-3513	5-17	R107
5905-279-3513	5-31A	R586
5905-279-3513	5-31A	R587
5905-279-3513	5-18	R1021
5905-279-3513	5-33	R1521
5905-279-3513	5-34	R1551
5905-279-3527	5-21	R1023
5905-279-5621	5-18	R1011
5905-295-3403	5-25	R341
5905-295-3403	5-27	R357
5905-299-1541	5-14	R23
5905-299-1541	5-14	R27
5905-299-1541	5-17	R111
5905-299-1541	5-17	R112
5905-299-1541	5-29	R443
5905-299-1541	5-29	R462
5905-299-1986	5-26A	R319
5905-299-1987	5-26	R319
5905-299-2013	5-29	R461
5905-299-2016	5-27	R360
5905-299-2020	5-29	R426
5905-299-2020	5-29	R448
5905-299-2022	5-29	R444
5905-299-2022	5-31	R501
5905-299-2022	5-31	R502
5905-299-2022	5-31	R548
5905-299-2022	5-31	R549
5905-299-2023	5-11	R1010
5905-299-2025	5-17	R159
5905-299-2025	5-32	R557
5905-299-2025	5-11	R1010
5905-299-2027	5-27	R362
5905-299-2027	5-27	R365
5905-299-2049	5-21	R210
5905-299-2051	5-14	R7
5905-473-5251	5-14	R24
5905-501-5184	5-10	R163
5905-501-5184	5-10	R361
5905-501-7314	5-10	R178
5905-501-7314	5-10	R1002
5905-501-7314	5-10	R1003
5905-501-7314	5-10	R1004
5905-501-7314	5-10	R1024
5905-503-5984	5-9	R13
5905-503-6218	5-11	R464
5905-503-9138	5-15	R50
5905-503-9138	5-15	R52
5905-503-9138	5-15	R67
5905-503-9138	5-15	R68
5905-518-5595	5-10	R411
5905-518-5609	5-9	R321
5905-518-5609	5-22	R202
5905-518-5609	5-22	R212
5905-518-5644	5-18	R1014
5905-539-2567	5-10	R431
5905-539-4900	5-13	R363
5905-539-5013	5-30	R508
5905-539-5013	5-30	R543
5905-542-9113	5-29	R432
5905-542-9835	5-11	R439
5905-549-3752	5-11	R405
5905-549-3752	5-11	R406
5905-549-3752	5-11	R407
5905-549-3752	5-11	R438
5905-549-5382	5-9	R96
5905-552-0614	5-17	R171
5905-552-2093	5-10	R114
5905-552-2093	5-10	R243
5905-552-3522	5-32	R563
5905-552-3522	5-32	R565
5905-552-3522	5-32	R566
5905-552-3522	5-32	R568
5905-552-5051	5-29	R433
5905-552-5051	5-18	R1018
5905-552-5051	5-18	R1019
5905-552-5051	5-18	R1020
5905-552-5136	5-23	R246
5905-552-5136	5-23	R260
5905-553-2389	5-23	R250
5905-553-2389	5-23	R252
5905-553-9299	5-15	R49
5905-553-9299	5-15	R51
5905-553-9299	5-15	R65
5905-553-9299	5-15	R66
5905-556-3339	5-17	R118
5905-556-4003	5-17	R169
5905-556-4003	5-23	R248
5905-556-4003	5-23	R251
5905-557-2422	5-16	R75
5905-557-2422	5-16	R76
5905-557-2422	5-16	R81
5905-557-2422	5-16	R82
5905-557-2422	5-31	R523
5905-557-2422	5-31	R524
5905-557-2422	5-31	R584
5905-557-2422	5-31	R585

SECTION VII. INDEX-FEDERAL STOCK NUMBER CROSS REFERENCE

TO FIGURE AND ITEM NUMBER OR REFERENCE DESIGNATION (CONTINUED)

FEDERAL STOCK NUMBER	FIGURE NUMBER	ITEM NUMBER OR REF. DESIGNATION
5905-577-7207	5-9	R99
5905-577-7503	5-33	R1508
5905-577-7503	5-33	R1538
5905-581-1645	5-17	R146
5905-581-7467	5-25	R347
5905-583-6233	5-31	R518
5905-583-6233	5-31	R522
5905-583-6233	5-31	R532
5905-583-6233	5-31	R533
5905-642-1680	5-11	R265
5905-642-1680	5-11	R270
5905-642-1969	5-11	R442
5905-643-5626	5-30	R504
5905-643-5626	5-30	R546
5905-646-5716	5-18	R1012
5905-646-5716	5-18	R1013
5905-646-5716	5-18	R1026
5905-646-5716	5-18	R1027
5905-646-5958	5-10	R211
5905-646-5958	5-11	R452
5905-666-2556	5-9	R87
5905-681-5979	5-23	R245
5905-681-5979	5-23	R259
5905-682-0230	5-14	R38
5905-683-2235	5-31	R582
5905-683-2235	5-31	R583
5905-683-2235	5-31	R588
5905-683-2235	5-31	R589
5905-683-2246	5-15	R53
5905-683-2246	5-15	R69
5905-683-7721	5-15	R77
5905-683-7721	5-15	R83
5905-683-7721	5-15A	R90
5905-683-7721	5-15A	R93
5905-683-7723	5-13A	R571
5905-683-7723	5-13A	R572
5905-683-7723	5-13A	R573
5905-683-7723	5-13A	R574
5905-715-0770	5-15	R89
5905-715-0770	5-15	R92
5905-715-0770	5-31	R507
5905-715-0770	5-31	R509
5905-715-0770	5-31	R519
5905-715-0770	5-31	R521
5905-715-0770	5-31	R529
5905-715-0770	5-31	R531
5905-715-0770	5-31	R542
5905-715-0770	5-31	R544
5905-717-3342	5-34	R553
5905-717-3343	5-17	R110
5905-721-4363	5-17A	R152
5905-722-0054	5-17	R120
5905-722-0136	5-23	R267
5905-726-5328	5-31	R516
5905-726-5328	5-31	R517
5905-726-5328	5-31	R534
5905-726-5328	5-31	R535
5905-726-5343	5-34	R561
5905-726-5346	5-34	R553
5905-726-6433	5-31	R571
5905-726-6433	5-31	R572
5905-726-6433	5-31	R573
5905-726-6433	5-31	R574
5905-726-6837	5-15	R90
5905-726-6837	5-15	R93
5905-728-2774	5-33	R1503
5905-730-0294	5-29	R415
5905-734-4730	5-25	R351
5905-752-6396	5-33	R1522
5905-752-6396	5-34	R1552
5905-752-7300	5-21	R235
5905-755-0797	5-31	R503
5905-755-0797	5-31	R505
5905-755-0797	5-31	R527
5905-755-0797	5-31	R528
5905-755-0797	5-31	R545
5905-755-0797	5-31	R547
5905-755-0797	5-31	R550
5905-755-0797	5-31	R551
5905-755-0797	5-32	R554
5905-755-0797	5-32	R558
5905-755-0797	5-32	R564
5905-755-0797	5-32	R567
5905-755-0797	5-33	R1500
5905-755-0797	5-33	R1530
5905-762-3660	5-25	R352
5905-762-6907	5-26	R367
5905-764-7690	5-31	R552
5905-766-8362	5-31	R512
5905-766-8362	5-31	R513
5905-766-8362	5-31	R538
5905-766-8362	5-31	R539
5905-766-8364	5-15	R46
5905-766-8364	5-15	R62
5905-767-3204	5-15	R98
5905-767-3204	5-29	R434
5905-767-3219	5-29	R437
5905-767-3220	5-15	R91
5905-767-3220	5-15	R94
5905-767-3229	5-31A	R580
5905-767-3229	5-31A	R581
5905-767-3231	5-29	R449
5905-767-3233	5-29	R429
5905-767-6832	5-14	R20
5905-767-6832	5-32	R562
5905-767-6832	5-32	R569
5905-767-7587	5-29	R416
5905-767-7587	5-29	R435
5905-767-7594	5-17A	R180
5905-767-7594	5-31A	R514
5905-767-7594	5-32A	R526
5905-767-7594	5-31A	R537
5905-768-5791	5-18A	R1006
5905-769-5453	5-13	R324
5905-769-8529	5-29A	R426
5905-769-8529	5-29A	R448
5905-769-8533	5-14	R5
5905-769-8533	5-14	R6
5905-769-8533	5-14	R12
5905-769-8533	5-14	R14
5905-769-8533	5-14	R31
5905-769-8533	5-17	R113
5905-769-8533	5-29	R428
5905-769-8533	5-29	R450
5905-774-8125	5-15	R97
5905-775-0637	5-31A	R515
5905-775-0637	5-31A	R536
5905-779-2009	5-27	R360
5905-779-2376	5-29A	R427
5905-782-0269	5-21	R237
5905-782-0269	5-21	R242
5905-782-0901	5-17	R142
5905-782-0901	5-29	R430
5905-783-8818	5-11	R1009
5905-793-2176	5-19	R162
5905-793-3064	5-21	R209
5905-793-3064	5-21A	R209
5905-793-3065	5-10	R223A/B

SECTION VII. INDEX-FEDERAL STOCK NUMBER CROSS REFERENCE TO FIGURE AND ITEM NUMBER OR REFERENCE DESIGNATION (CONTINUED)

FEDERAL STOCK NUMBER	FIGURE NUMBER	ITEM NUMBER OR REF. DESIGNATION
5905-795-0651	5-13	R330
5905-800-8321	5-31A	R516
5905-800-8321	5-31A	R517
5905-800-8321	5-31A	R534
5905-800-8321	5-31A	R535
5905-802-6730	5-15	R48
5905-802-6730	5-15	R64
5905-802-6730	5-31A	R503
5905-802-6730	5-31A	R505
5905-802-6730	5-31A	R527
5905-802-6730	5-31A	R528
5905-802-6730	5-31A	R545
5905-802-6730	5-31A	R547
5905-802-6730	5-31A	R550
5905-802-6730	5-31A	R551
5905-802-6730	5-32A	R554
5905-802-6730	5-32A	R558
5905-802-6730	5-32A	R564
5905-802-6730	5-32A	R567
5905-802-6730	5-33	R1500
5905-802-6730	5-33	R1530
5905-804-6088	5-13	R1025
5905-804-6098	5-24	R221
5905-804-6098	5-24	R222
5905-804-6099	5-17	R109
5905-804-6099	5-29	R408
5905-804-6099	5-32	R556
5905-804-6100	5-17	R13
5905-805-1432	5-29	R427
5905-809-4788	5-31	R510A
5905-809-4788	5-31	R510B
5905-809-4788	5-33	R540A/B
5905-810-0507	5-33	R1513
5905-810-0507	5-33	R1543
5905-811-9399	5-11	R424
5905-814-3871	5-33	R1504
5905-814-7578	5-15	R45
5905-814-7578	5-15	R61
5905-814-8413	5-15A	R80
5905-814-8413	5-15A	R86
5905-814-8413	5-21A	R210
5905-817-7971	5-15	R78
5905-817-7971	5-15	R79
5905-817-7971	5-15	R84
5905-817-7971	5-15	R85
5905-817-7971	5-31	R525
5905-817-7971	5-31	R576
5905-817-7971	5-33	R1512
5905-817-7971	5-33	R1515
5905-817-7971	5-33	R1518
5905-817-7971	5-33	R1542
5905-817-7971	5-33	R1545
5905-817-7971	5-33	R1548
5905-818-7071	5-31	R575
5905-841-7440	5-11	R421
5905-842-5895	5-9	R95
5905-847-4306	5-13	R368
5905-852-4474	5-29	R410
5905-852-4474	5-29	R412
5905-852-4476	5-17	R131
5905-855-4075	5-11	R403
5905-855-4075	5-11	R424
5905-855-7207	5-31A	R518
5905-855-7207	5-31A	R522
5905-855-7207	5-31A	R532
5905-855-7207	5-31A	R533
5905-880-2206	5-18A	R1007
5905-882-0055	5-23	R271
5905-883-9198	5-33	R1523
5905-883-9198	5-34	R1553
5905-884-0788	5-17	R121
5905-884-0788	5-17	R148
5905-884-0788	5-17	R149
5905-884-0788	5-22	R201
5905-884-0788	5-22	R213
5905-892-0158	5-13	R368
5905-892-6475	5-24	R205
5905-892-6475	5-24	R215
5905-892-6475	5-33	R1511
5905-892-6475	5-33	R1514
5905-892-6475	5-33	R1517
5905-892-6475	5-33	R1520
5905-892-6475	5-33	R1524
5905-892-6475	5-33	R1541
5905-892-6475	5-33	R1547
5905-892-6475	5-33	R1548
5905-892-6475	5-34	R1560
5905-892-6479	5-17	R139
5905-892-6479	5-17	R170
5905-892-7108	5-27	R358
5905-894-3305	5-33	R590
5905-901-7883	5-33	R1508
5905-901-7883	5-33	R1538
5905-902-0676	5-15	R54
5905-903-6828	5-29	R445
5905-903-6829	5-14	R37
5905-913-3072	5-14	R39
5905-914-6435	5-26A	R336
5905-914-6435	5-32	R570
5905-916-7727	5-23A	R246
5905-916-7727	5-23A	R260
5905-933-3787	5-15	R80
5905-933-3787	5-15	R86
5905-936-1536	5-23A	R245
5905-936-1536	5-23A	R259
5905-936-1537	5-17A	R148
5905-936-1537	5-17A	R149
5905-936-1537	5-22A	R201
5905-936-1537	5-22A	R213
5905-936-1539	5-17A	R171
5905-936-1540	5-31A	R523
5905-936-1540	5-31A	R524
5905-936-1540	5-31A	R584
5905-936-1540	5-31A	R585
5905-950-2856	5-12	R460
5905-951-1478	5-14	R11
5905-951-1478	5-14	R16
5905-951-1478	5-15	R47
5905-951-1478	5-15	R63
5905-951-4930	5-33	R1502
5905-951-4930	5-33	R1532
5905-951-4930	5-33	R1533
5905-951-4930	5-33	R1534
5905-951-8520	5-33	R1501
5905-951-8520	5-33	R1531
5905-954-9088	5-25	R348
5905-957-0445	5-25	R346
5905-957-0446	5-21	R234
5905-969-5857	5-33	R1516
5905-969-5857	5-33	R1546
5905-975-1273	5-29A	R432
5905-975-1273	5-29	R446
5905-975-1300	5-29A	R433
5905-975-4347	5-27A	R362

FEDERAL STOCK NUMBER	FIGURE NUMBER	ITEM NUMBER OR REF. DESIGNATION
5905-975-4347	5-27A	R365
5905-975-4358	5-17	R152
5905-975-4362	5-23A	R276
5905-978-7402	5-33	R1510
5905-978-7402	5-33	R1540
5905-983-5479	5-33	R1509
5905-983-5479	5-33	R1539
5905-983-5819	5-23A	R248
5905-983-5819	5-23A	R251
5905-983-7147	5-13	R216
5905-984-1993	5-32A	R563
5905-984-1993	5-32A	R565
5905-984-1993	5-32A	R566
5905-984-1993	5-32A	R568
5905-985-6058	5-26	R335
5905-985-6058	5-26	R342
5905-985-6058	5-29	R413
5905-985-6059	5-22	R203
5905-985-6059	5-33	R1505
5905-985-6059	5-33	R1535
5905-988-0143	5-25	R343
5905-988-0149	5-18A	R1018
5905-988-0149	5-18A	R1019
5905-988-0149	5-18A	R1020
5905-988-2251	5-29	R425
5905-989-5579	5-17	R174
5905-990-5020	5-22	R204
5905-990-5020	5-23	R247
5905-990-5020	5-33	R1506
5905-990-5020	5-33	R1536
5905-990-9556	5-21	R236
5905-993-5953	5-25	R353
5905-993-5968	5-18	R1017
5905-993-5987	5-25	R345
5910-052-2025	5-9	C425
5910-064-2344	5-14	C9
5910-088-0385	5-17	C132
5910-195-5157	5-33	C151
5910-195-5157	5-33	C1506
5910-195-5157	5-33	C1507
5910-195-5157	5-33	C1522
5910-195-5157	5-33	C1525
5910-195-5157	5-33	C1529
5910-195-5157	5-33	C1533
5910-195-5157	5-33	C1537
5910-195-5157	5-33	C1549
5910-195-5157	5-33	C1550
5910-195-5157	5-33	C1561
5910-195-5157	5-33	C1565
5910-195-5157	5-33	C1568
5910-195-5157	5-33	C1572
5910-195-5157	5-33	C1576
5910-195-5157	5-33	C1580
5910-275-6419	5-15	C20
5910-275-6419	5-33	C1504
5910-275-6419	5-33	C1505
5910-275-6419	5-33	C1508
5910-275-6419	5-33	C1509
5910-275-6419	5-33	C1512
5910-275-6419	5-33	C1513
5910-275-6419	5-33	C1516
5910-275-6419	5-33	C1517
5910-275-6419	5-33	C1520
5910-275-6419	5-33	C1521
5910-275-6419	5-33	C1524
5910-275-6419	5-33	C1526
5910-275-6419	5-33	C1530
5910-275-6419	5-33	C1532
5910-275-6419	5-33	C1534
5910-275-6419	5-33	C1536
5910-275-6419	5-33	C1538
5910-275-6419	5-33	C1547
5910-275-6419	5-33	C1548
5910-275-6419	5-33	C1551
5910-275-6419	5-33	C1552
5910-275-6419	5-33	C1555
5910-275-6419	5-33	C1556
5910-275-6419	5-33	C1559
5910-275-6419	5-33	C1560
5910-275-6419	5-33	C1563
5910-275-6419	5-33	C1564
5910-275-6419	5-33	C1567
5910-275-6419	5-33	C1569
5910-275-6419	5-33	C1571
5910-275-6419	5-33	C1573
5910-275-6419	5-33	C1575
5910-275-6419	5-33	C1577
5910-275-6419	5-33	C1579
5910-275-6419	5-33	C1581
5910-275-6419	5-33	C1590
5910-280-9608	5-27	C312
5910-280-9608	5-27	C313
5910-284-4756	5-34	C1592
5910-284-4756	5-34	C1594
5910-543-0821	5-17	C117
5910-543-0823	5-17	C110
5910-543-0823	5-33	C1540
5910-543-0823	5-33	C1541
5910-543-0823	5-33	C1544
5910-543-0823	5-33	C1545
5910-543-0823	5-34	C1587
5910-556-9427	5-33	C1511
5910-556-9427	5-33	C1514
5910-556-9427	5-33	C1554
5910-556-9427	5-33	C1557
5910-556-9440	5-17	C121
5910-556-9440	5-22	C204
5910-577-7925	5-33	C1503
5910-577-7925	5-33	C1546
5910-578-1623	5-16	C28
5910-578-1623	5-16	C29
5910-578-1623	5-22	C201
5910-578-1623	5-22	C207
5910-578-1623	5-23	C211
5910-578-1623	5-23	C213
5910-578-1623	5-18	C1010
5910-578-1623	5-18	C1012
5910-578-1623	5-18	C1014
5910-578-1623	5-18	C1016
5910-578-5543	5-15	C31
5910-578-5543	5-23	C216
5910-578-5543	5-32	C509
5910-578-5543	5-32	C510
5910-615-9519	5-10A	C411
5910-615-9519	5-10A	C420
5910-686-6603	5-27	C307
5910-686-6603	5-27	C308
5910-686-6603	5-27	C309
5910-686-6603	5-27	C311
5910-688-2822	5-31	C517
5910-688-2822	5-31	C518
5910-717-0169	5-17	C114
5910-717-0169	5-33	C1523
5910-717-0169	5-33	C1566
5910-725-4795	5-18	C1009
5910-725-7647	5-27	C314
5910-725-7647	5-18	C1015

FEDERAL STOCK NUMBER	FIGURE NUMBER	ITEM NUMBER OR REF. DESIGNATION
5910-725-7647	5-33	C1510
5910-725-7647	5-33	C1553
5910-727-3554	5-17A	C109
5910-727-3554	5-17	C134
5910-727-3554	5-17A	C134
5910-727-9848	5-18	C1003
5910-728-2144	5-21	C202
5910-728-2144	5-26	C302
5910-728-2144	5-29	C409
5910-728-2144	5-29	C412
5910-728-2144	5-29	C417
5910-728-2144	5-33	C1501
5910-728-2144	5-33	C1502
5910-728-2212	5-12	C306
5910-728-2212	5-12	C315
5910-754-6956	5-9	C425
5910-760-7924	5-25	C318
5910-762-2945	5-18A	C1004
5910-803-2880	5-29	C419
5910-804-2372	5-26	C316
5910-804-2372	5-26	C317
5910-804-2377	5-33	C1515
5910-804-2377	5-33	C1519
5910-804-2377	5-33	C1558
5910-804-2377	5-33	C1562
5910-805-2327	5-30	MP505
5910-805-2327	5-30	MP506
5910-806-3772	5-33	C1539
5910-806-3772	5-33	C1582
5910-807-2595	5-17A	C124
5910-807-2595	5-17	C133
5910-807-2595	5-17A	C133
5910-807-2595	5-18	C1013
5910-807-5570	5-23	C215
5910-807-5570	5-28	C407
5910-807-5570	5-29	C426
5910-807-9305	5-17A	C124
5910-807-9305	5-18	C1004
5910-809-1121	5-10	C403
5910-809-4773	5-10	C401
5910-809-4773	5-11	C408
5910-809-4773	5-10	C416
5910-809-4774	5-10	C411
5910-809-4774	5-10	C420
5910-816-6613	5-15	C32
5910-816-6613	5-17	C109
5910-816-6613	5-17	C143
5910-816-6613	5-22	C205
5910-816-9909	5-33	C1531
5910-816-9909	5-33	C1574
5910-819-5745	5-26	C301
5910-819-5745	5-18	C1002
5910-820-6114	5-18	C1001
5910-822-5682	5-20	C103
5910-822-5682	5-17	C106
5910-822-5682	5-17	C123
5910-822-5682	5-17	C136
5910-822-5682	5-19	C130
5910-822-5682	5-31	C522
5910-822-5682	5-31	C523
5910-823-1056	5-34	C1592
5910-823-1056	5-34	C1594
5910-823-1068	5-15	C23
5910-823-1068	5-15	C24
5910-823-1068	5-17	C102
5910-823-1203	5-17	C108
5910-825-4546	5-17	C105
5910-826-5466	5-17	C119
5910-827-0175	5-11	C402
5910-827-0175	5-11	C410
5910-838-0869	5-26A	C303
5910-851-7794	5-26	C304
5910-857-7280	5-10A	C403
5910-867-0118	5-23	C212
5910-867-0118	5-23	C214
5910-874-6903	5-26	C305
5910-879-4764	5-23	C222
5910-883-4781	5-26	C303
5910-883-4781	5-33	C1588
5910-883-4781	5-33	C1595
5910-883-4781	5-34	C1591
5910-889-4777	5-14	C11
5910-889-4777	5-18	C1011
5910-892-7395	5-17	C107
5910-893-7514	5-33	C1527
5910-893-7514	5-33	C1570
5910-926-8036	5-46A	C1500
5910-926-8036	5-33	C1503
5910-926-8036	5-33	C1506
5910-926-8036	5-46A	C1543
5910-926-8036	5-46A	C1546
5910-926-8036	5-46A	C1549
5910-926-8036	5-33	C1589
5910-934-0327	5-14	C2
5910-934-0327	5-14	C7
5910-934-0327	5-14	C8
5910-934-0327	5-14	C10
5910-934-0327	5-14	C12
5910-934-0327	5-14	C13
5910-934-0327	5-17	C138
5910-934-0327	5-24	C221
5910-934-0327	5-28	C404
5910-934-0327	5-28	C405
5910-934-0327	5-28	C406
5910-936-7514	5-18	C1008
5910-952-9440	5-18	C1006
5910-959-4596	5-18	C1007
5910-976-3686	5-21A	C202
5910-976-3686	5-21A	C302
5910-976-3686	5-29A	C409
5910-976-3686	5-29A	C412
5910-976-3686	5-29A	C417
5910-976-3686	5-46A	C1501
5910-976-3686	5-46A	C1502
5910-990-6796	5-33	C1535
5910-990-6796	5-33	C1578
5910-993-8367	5-14	C1
5910-993-8367	5-14	C14
5910-993-8367	5-14	C15
5910-993-8367	5-15	C21
5910-993-8367	5-15	C22
5910-993-8367	5-15	C25
5910-993-8367	5-15	C26
5910-993-8367	5-15	C27
5910-993-8367	5-15	C30
5910-993-8367	5-15	C33
5910-993-8367	5-15	C34
5910-993-8367	5-15	C35
5910-993-8367	5-19	C101
5910-993-8367	5-20	C104
5910-993-8367	5-17	C116
5910-993-8367	5-17	C118
5910-993-8367	5-17	C122
5910-993-8367	5-17	C135
5910-993-8367	5-17	C137
5910-993-8367	5-17A	C138
5910-993-8367	5-17	C139

FEDERAL STOCK NUMBER	FIGURE NUMBER	ITEM NUMBER OR REF. DESIGNATION
5910-993-8367	5-17	C140
5910-993-8367	5-17	C141
5910-993-8367	5-17	C142
5910-993-8367	5-24	C206
5910-993-8367	5-26	C310
5910-993-8367	5-29	C413
5910-993-8367	5-29	C418
5910-993-8367	5-29A	C418
5910-993-8367	5-31	C503
5910-993-8367	5-31	C504
5910-993-8367	5-32	C506
5910-993-8367	5-32	C507
5910-993-8367	5-32	C508
5910-993-8367	5-32	C511
5910-993-8367	5-32	C515
5910-993-8367	5-31	C516
5910-993-8367	5-32	C519
5910-993-8367	5-34	C1593
5910-993-8367	5-36	C2001
5915-809-9638	5-12	FL401
5920-280-4465	5-10	F404
5920-280-4465	5-10	F405
5920-280-8344	5-11	F403
5920-295-9270	5-11	F406
5920-519-7733	5-11	F401
5920-519-7733	5-11	F402
5920-660-6705	5-11	XF401
5920-660-6705	5-11	XF402
5920-660-6705	5-11	XF403
5920-660-6705	5-11	XF404
5920-660-6705	5-11	XF405
5920-660-6705	5-11	XF406
5920-894-4556	5-11	F401
5920-894-4556	5-11	F402
5930-054-0356	5-18A	A1000
5930-054-0358	5-34	A500
5930-057-5260	5-33	A1502
5930-057-5260	5-33	A1503
5930-655-1508	5-36	S2001
5930-655-1508	5-36	S2002
5930-655-1514	5-13	S201
5930-655-1515	5-36	S2001
5930-655-1575	5-13	S401
5930-655-1582	5-36	S2002
5930-757-3076	5-19	S101
5930-757-3077	5-20	S102
5930-757-3078	5-21	S202
5930-757-3079	5-18	S1001
5930-757-3080	5-34	S505
5930-757-3081	5-30	S506
5930-757-3081	5-30	S507
5930-757-7699	5-25	S302
5930-757-7702	5-33	S502
5930-757-7702	5-33	S504
5930-757-7702	5-33	S504
5930-790-4889	5-11	S402
5930-795-9384	5-30	S506
5930-795-9384	5-30	S507
5930-795-9386	5-33	S502
5930-795-9386	5-33	S504
5930-795-9388	5-33	S501
5930-795-9388	5-33	S503
5930-809-4792	5-13	S1
5930-861-0412	5-33	S501
5930-861-0412	5-33	S503
5930-895-6393	5-11	S402
5930-936-3789	5-13	S1
5930-960-0158	5-20	S102
5930-960-0159	5-19	S101
5935-052-2899	5-9	XV305
5935-082-0481	5-9	J1
5935-149-3534	1-1	CP603
5935-149-3534	1-1	CP604
5935-201-6511	5-36	P2001
5935-237-6457	5-9	XV305
5935-258-1767	5-13	E101
5935-258-1767	5-13	E102
5935-258-1767	5-13	E104
5935-258-1767	5-13	E201
5935-258-1767	5-13	E301
5935-258-1767	5-13	E302
5935-258-1767	5-13	E501
5935-258-1767	5-13	E502
5935-258-1767	5-36	E2001
5935-258-1767	5-36	E2002
5935-258-5811	5-30	P501
5935-295-6950	5-12	J105
5935-502-0342	5-35A	E704
5935-502-5151	5-13	J301
5935-502-5151	5-13	J302
5935-552-7660	5-13	J101
5935-552-7660	5-13	J102
5935-552-7660	5-13	J104
5935-552-7660	5-13	J203
5935-552-7660	5-30	J501
5935-552-7660	5-30	J502
5935-552-7660	5-36	J2001
5935-552-7660	5-36	J2002
5935-577-2281	1-1	P601
5935-577-2281	1-1	P602
5935-577-2281	1-1	P603
5935-577-2281	1-1	P604
5935-683-7892	1-1	CP605
5935-683-7892	1-1	CP606
5935-687-1779	5-26A	XV304
5935-687-1779	5-26A	XV307
5935-688-3404	5-26A	XV301
5935-688-3404	5-26A	XV306
5935-688-3404	5-26A	XV310
5935-688-3404	5-26A	XV311
5935-753-7565	5-26	XV308
5935-753-7565	5-26	XV309
5935-763-2258	5-32	XV507
5935-763-2258	5-32	XV508
5935-805-4991	1-1	P402
5935-808-9569	5-14	XV1
5935-808-9569	5-14	XV4
5935-808-9569	5-14	XV5
5935-808-9569	5-15	XV7
5935-808-9569	5-15	XV10
5935-808-9569	5-15	XV11
5935-808-9569	5-17	XV101
5935-808-9569	5-17	XV103
5935-808-9569	5-17	XV104
5935-808-9569	5-17	XV105
5935-808-9569	5-17	XV107
5935-808-9569	5-17	XV109
5935-808-9569	5-17	XV113
5935-808-9569	5-17	XV114
5935-808-9569	5-17	XV115
5935-808-9569	5-24	XV201
5935-808-9569	5-24	XV202
5935-808-9569	5-23	XV203
5935-808-9569	5-23	XV204
5935-808-9569	5-23	XV205
5935-808-9569	5-23	XV206
5935-808-9569	5-23	XV207
5935-808-9569	5-26	XV301

SECTION VII. INDEX-FEDERAL STOCK NUMBER CROSS REFERENCE

TO FIGURE AND ITEM NUMBER OR REFERENCE DESIGNATION (CONTINUED)

FEDERAL STOCK NUMBER	FIGURE NUMBER	ITEM NUMBER OR REF. DESIGNATION
5935-808-9569	5-26	XV306
5935-808-9569	5-26	XV310
5935-808-9569	5-26	XV311
5935-808-9569	5-31	XV501
5935-808-9569	5-31	XV502
5935-808-9569	5-31	XV504
5935-808-9569	5-31	XV505
5935-823-0639	1-1	CP601
5935-823-0639	1-1	CP602
5935-841-7102	5-32A	XV507
5935-841-7102	5-32A	XV508
5935-843-7362	1-1	P401
5935-843-9008	5-13	J101
5935-843-9008	5-13	J102
5935-843-9008	5-13	J104
5935-843-9008	5-13	J201
5935-843-9008	5-13	J301
5935-843-9008	5-13	J302
5935-843-9008	5-30	J501
5935-843-9008	5-30	J502
5935-843-9008	5-36	J2001
5935-843-9008	5-36	J2002
5935-849-9455	5-14	XV2
5935-849-9455	5-14	XV3
5935-849-9455	5-15	XV6
5935-849-9455	5-15	XV12
5935-849-9455	5-15	XV13
5935-849-9455	5-31	XV503
5935-849-9455	5-31	XV506
5935-850-6567	5-29A	XV401
5935-856-6987	5-26	XV304
5935-856-6987	5-26	XV307
5935-856-6987	5-29	XV401
5935-856-9441	1-1	CP607
5935-856-9441	1-1	CP608
5935-856-9441	1-1	CP609
5935-856-9441	1-1	CP610
5935-962-8580	1-1	CP607
5935-962-8580	1-1	CP608
5935-962-8580	1-1	CP609
5935-962-8580	1-1	CP610
5935-990-2827	5-14	XV1
5935-990-2827	5-14A	XV4
5935-990-2827	5-14A	XV5
5935-990-2827	5-15A	XV7
5935-990-2827	5-15A	XV10
5935-990-2827	5-15A	XV11
5935-990-2827	5-17A	XV101
5935-990-2827	5-17A	XV103
5935-990-2827	5-17A	XV104
5935-990-2827	5-17A	XV105
5935-990-2827	5-17A	XV107
5935-990-2827	5-17A	XV109
5935-990-2827	5-17A	XV113
5935-990-2827	5-17A	XV114
5935-990-2827	5-17A	XV115
5935-990-2827	5-24A	XV201
5935-990-2827	5-24A	XV202
5935-990-2827	5-23A	XV203
5935-990-2827	5-23A	XV204
5935-990-2827	5-23A	XV205
5935-990-2827	5-23A	XV206
5935-990-2827	5-23A	XV207
5935-990-2827	5-31A	XV501
5935-990-2827	5-31A	XV502
5935-990-2827	5-31A	XV504
5935-990-2827	5-31A	XV505
5940-543-8538		MP420
5940-543-8538	5-30	MP520
5940-543-8538	5-30	MP521
5940-543-8538	5-30	MP522
5940-543-8538	5-30	MP523
5940-543-8538	5-30	MP524
5940-543-8538	5-30	MP525
5950-052-0748	5-17	L102
5950-052-0748	5-17	L103
5950-052-2905	5-14A	L4
5950-052-2905	5-14A	L6
5950-053-8245	5-14A	L3
5950-053-8245	5-14A	L5
5950-053-8245	5-15A	L21
5950-053-8245	5-15A	L22
5950-053-8245	5-31A	L514
5950-053-8245	5-31A	L515
5950-053-8245	5-31A	L518
5950-053-8245	5-31A	L519
5950-059-3904	5-17A	L101
5950-504-6500	5-11	L402
5950-504-6500	5-11	L404
5950-504-6505	5-9	T401
5950-504-6510	5-31	L501
5950-504-6510	5-31	L502
5950-504-6510	5-31	L511
5950-504-6510	5-31	L512
5950-701-5926	5-14A	L9
5950-701-5926	5-15A	L14
5950-701-5926	5-15A	L17
5950-701-5926	5-31A	L503
5950-701-5926	5-31A	L505
5950-701-5926	5-31A	L508
5950-701-5926	5-31A	L510
5950-724-6209	5-15A	L13
5950-724-6209	5-15A	L16
5950-728-5333	5-14	L1
5950-728-5333	5-14	L2
5950-752-3549	5-31	L516
5950-752-3549	5-31	L517
5950-754-9896	5-14	L3
5950-754-9896	5-14	L5
5950-754-9896	5-15	L21
5950-754-9896	5-15	L22
5950-754-9896	5-31	L514
5950-754-9896	5-31	L515
5950-754-9896	5-31	L518
5950-754-9896	5-31	L519
5950-757-7700	5-9	T301
5950-757-7703	5-33	T501
5950-773-8948	5-15A	L19
5950-773-8948	5-15A	L20
5950-795-9381	5-33	T501
5950-795-9383	5-9	T401
5950-801-1525	5-15	L19
5950-801-1525	5-15	L20
5950-802-0913	5-26	L301
5950-802-0913	5-32	L513
5950-802-1805	5-17	L101
5950-809-4459	5-23	L201
5950-809-4459	5-23	L202
5950-809-4797	5-10	L406
5950-810-0824	5-10	L403
5950-810-0824	5-10	L405
5950-810-4611	5-14	L10
5950-810-4611	5-14A	L10
5950-812-2760	5-15	L13
5950-812-2760	5-15	L16
5950-823-1209	5-31	L503
5950-823-1209	5-31	L505
5950-823-1209	5-31	L508

FEDERAL STOCK NUMBER	FIGURE NUMBER	ITEM NUMBER OR REF. DESIGNATION
5950-823-1209	5-31	L510
5950-852-5167	5-14	L9
5950-852-5167	5-15	L14
5950-852-5167	5-15	L17
5950-880-0347	5-26A	L301
5950-880-0347	5-32A	L513
5950-892-8209	5-31A	L516
5950-892-8209	5-31A	L517
5950-893-1607	5-15	L15
5950-893-1607	5-15	L18
5950-893-1608	5-14	L4
5950-893-1608	5-14	L6
5950-936-7655	5-15A	L15
5950-936-7655	5-15A	L18
5950-957-3013	5-14A	L1
5950-957-3013	5-14A	L2
5960-262-0185	5-6	V307
5960-262-0286	5-6	V401
5960-272-8553	5-6	V308
5960-272-8553	5-6	V309
5960-272-8553	5-6	V310
5960-272-8553	5-6	V311
5960-615-0243	5-6	V109
5960-615-0243	5-6	V204
5960-615-0243	5-6	V205
5960-615-0243	5-6	V207
5960-669-6861	5-6	V304
5960-686-8087	5-30	MP517
5960-686-8087	5-30	MP518
5960-806-5614	5-6	V1
5960-806-5614	5-6	V2
5960-806-5614	5-6	V3
5960-806-5614	5-6	V4
5960-806-5614	5-6	V5
5960-806-5614	5-15	V6
5960-806-5614	5-15	V7
5960-806-5614	5-15	V10
5960-806-5614	5-15	V11
5960-806-5614	5-15	V12
5960-806-5614	5-15	V13
5960-806-5614	5-6	V101
5960-806-5614	5-6	V103
5960-806-5614	5-6	V104
5960-806-5614	5-6	V105
5960-806-5614	5-6	V107
5960-806-5614	5-6	V113
5960-806-5614	5-6	V114
5960-806-5614	5-6	V115
5960-806-5614	5-6	V201
5960-806-5614	5-6	V202
5960-806-5614	5-6	V203
5960-806-5614	5-6	V206
5960-806-5614	5-6	V301
5960-806-5614	5-6	V306
5960-806-5614	5-6	V501
5960-806-5614	5-6	V502
5960-806-5614	5-6	V503
5960-806-5614	5-6	V504
5960-806-5614	5-6	V505
5960-806-5614	5-6	V506
5960-806-5614	5-6	V507
5960-806-5614	5-6	V508
5960-881-6636	5-6	V305
5961-062-2320	5-23	Q201
5961-062-2320	5-23	Q202
5961-062-2320	5-31	Q501
5961-062-2320	5-31	Q502
5961-062-2320	5-31	Q503
5961-062-2320	5-31	Q504
5961-082-4201	5-17	CR101
5961-082-4202	5-17	CR104
5961-082-4203	5-10	Q403
5961-082-4203	5-10	Q404
5961-082-4203	5-10	Q405
5961-082-4203	5-10	Q409
5961-082-4203	5-10	Q413
5961-082-4203	5-10	Q416
5961-082-4203	5-10	Q418
5961-082-4203	5-10	Q419
5961-752-5229	5-29	Q401
5961-752-5229	5-29A	Q401
5961-752-5229	5-29	Q402
5961-752-5229	5-29A	Q402
5961-752-5229	5-29A	Q406
5961-752-5229	5-29	Q407
5961-752-5229	5-29A	Q407
5961-752-5229	5-29	Q408
5961-752-5229	5-29A	Q408
5961-752-5229	5-29	Q412
5961-752-5229	5-29A	Q412
5961-752-5229	5-29	Q414
5961-752-5229	5-29A	Q414
5961-752-5229	5-29	Q415
5961-752-5229	5-29A	Q415
5961-811-5799	5-10	CR414
5961-811-5799	5-10	CR415
5961-814-0768	5-17	CR102
5961-814-0768	5-31	CR501
5961-814-0768	5-32	CR502
5961-814-0768	5-32	CR503
5961-814-0768	5-32	CR504
5961-814-0768	5-31	CR505
5961-814-0768	5-36	CR2001
5961-846-7338	5-10	Q417
5961-851-5923	5-29	Q406
5961-851-5923	5-29	Q410
5961-851-5923	5-29A	Q410
5961-851-5923	5-29	Q411
5961-851-5923	5-29A	Q411
5961-852-7549	5-17	CR103
5961-852-7549	5-29	CR413
5961-852-7549	5-29	CR416
5961-883-4798	5-28	CR401
5961-883-4798	5-28	CR402
5961-883-4798	5-28	CR403
5961-883-4798	5-28	CR404
5961-883-4798	5-28	CR405
5961-883-4798	5-28	CR406
5961-883-4798	5-28	CR407
5961-883-4798	5-28	CR408
5961-883-4798	5-28	CR409
5961-883-4798	5-28	CR410
5961-883-4798	5-28	CR411
5961-883-4798	5-28	CR412
5961-892-0748	5-32	CR506
5961-934-3002	5-10	Q403
5961-934-3002	5-10	Q404
5961-934-3002	5-10	Q405
5961-934-3002	5-10	Q409
5961-934-3002	5-10	Q413
5961-934-3002	5-10	Q416
5961-934-3002	5-10	Q418
5961-934-3002	5-10	Q419
5995-045-4579	5-9	DL301
5995-752-8781	1-1	A603
5995-752-8781	1-1	A604
5995-985-7744	1-1	A403
6105-134-9996	5-11A	B401

SECTION VII. INDEX-FEDERAL STOCK NUMBER CROSS REFERENCE

TO FIGURE AND ITEM NUMBER OR REFERENCE DESIGNATION (CONTINUED)

FEDERAL STOCK NUMBER	FIGURE NUMBER	ITEM NUMBER OR REF. DESIGNATION
6105-757-3075	5-11	B401
6145-284-0579	1-1	W401
6145-542-6092	1-1	W605
6145-542-6092	1-1	W606
6210-078-7626	5-36	XDS2001
6210-809-4274	5-13	XDS401
6210-809-4274	5-36	XDS2001
6240-155-8706	5-9	DS403
6240-155-8706	5-9	DS404
6240-155-8706	5-9	DS405
6240-155-8706	5-9	DS406
6240-155-8706	5-13	DS1001
6240-179-1811	5-11	DS402
6240-539-8959	5-11	DS402
6240-539-8959	5-15	V8
6240-539-8959	5-15	V9
6240-539-8959	5-17	V102
6240-539-8959	5-17	V110
6240-539-8959	5-17	V111
6240-539-8959	5-17	V116
6240-539-8959	5-26	V303
6240-539-8959	5-32	V509
6240-892-4420	5-13	DS401
6240-892-4420	5-36	DS2001
6250-283-9741	5-13	XDS1001
6625-072-5227	5-35	A601
6625-072-5227	5-35	A602
6625-167-9297	5-35A	E703
6625-167-9793	5-35A	E706
6625-167-9794	5-35A	E707
6625-167-9795	5-35A	E708
6625-167-9798	5-35A	E704
6625-436-1588	5-35A	W702
6625-453-5650	5-35A	W701
6625-758-4949	5-35	W603
6625-758-4949	5-35	W604
6625-759-0741	1-1	A5
6625-893-1795	5-9	DL1
6625-893-1795	5-9	DL2
6625-960-4308	5-9	DL1
6625-960-4308	5-9	DL2
6625-961-5888	5-36	A2000

REFERENCE NO.	MFG. CODE	FIG. NO.	REF. DESIG. OR ITEM NO.
DA1A1A1DA1	06540	5-9	TB1
SC-B-83314-42	98003	1-1	MP605
SC-B-83314-42	98003	1-1	MP606
SC-B-83314-42	98003	1-1	MP607
SC-B-83314-42	98003	1-1	MP608
1450-0024-9	28480	5-9	XDS403
1450-0024-9	28480	5-9	XDS404
1450-0024-9	28480	5-9	XDS405
1450-0024-9	28480	5-9	XDS406
1542A	71785	5-36	TB2001
162A-19D(N)	28480	5-34	A500
162A-34C(N)	28480	5-33	A503
162A-65E(N)	28480	5-31	A501
162A-65F(N)	28480	5-32	A502
170A-19A(N)	28480	5-21	A200
170A-19B(N)	28480	5-18	A1000
170A-19C(N)	28480	5-25	A300
170A-19D(N)	28480	5-20	A103
170A-19E(N)	28480	5-19	A100
170A-65J(N)	28480	5-26	A301
170A-65K(N)	28480	5-29	A402
170A-65L(N)	28480	5-23	A202

REFERENCE NO.	MFG. CODE	FIG. NO.	REF. DESIG. OR ITEM NO.
170A-65M(N)	28480	5-28	A401
170A-65N(N)	28480	5-24	A203
170A-65P(N)	28480	5-17	A101
170A-65R(N)	28480	5-22	A201
170A-65S(N)	28480	5-14	A1
170A-65T(N)	28480	5-16	A3
170A-65U(N)	28480	5-27	A302
170A-65V(N)	28480	5-15	A2
1920-30	28569	5-33	A503
19912-427	28569	5-25	S302
19912-527	28569	5-21	S202
19915-672	28569	5-21A	A200
19915-674	28569	5-25	A300
19915-675	28569	5-20	A103
19915-676	28569	5-19	A100
20800-321	28569	5-9	T301
2420-574	28569	5-28A	A401
2420-734	28569	5-17A	A101
2420-735	28569	5-14A	A1
2420-736	28569	5-15A	A2
2420-737	28569	5-26A	A301
2420-738	28569	5-27A	A302
2420-739	28569	5-16	A3
2420-740	28569	5-23A	A202
2420-741	28569	5-22A	A201
2420-742	28569	5-24A	A203
2420-743	28569	5-29A	A402
2420-747	28569	5-32A	A502
2420-748	28569	5-31	A501
5040-0418	28480	5-9	MP306
5040-0418	28480	5-9	MP307
5040-0702	28480	5-13	MP319
5040-0702	28480	5-13	MP320
5040-0702	28480	5-13	MP321
5040-0702	28480	5-13	MP322
599M-ST-5	75382	5-9	TB401
599M-ST-5	75382	5-9	TB402
599M-ST-5	75382	5-10	TB403
610	06540	5-10	TB2
610	06540	5-21	TB201
610	06540	5-10	TB404
6115-3	28569	5-35A	E702
669	06540	5-12	TB405
669	06540	5-10	TB408
744	06540	5-11	TB301
797	06540	5-11	TB406
797	06540	5-36	TB2001

SECTION VIII INDEX- REFERENCE DESIGNATION

CROSS REFERENCE TO PAGE NUMBER (CONTINUED)

REFERENCE DESIGNATION	PAGE NUMBER
A1	3
A2	4
A3	6
A5	24
A100	6
A101	6
A103	10
A200	10
A201	11
A202	11
A203	12
A300	13
A301	13
A302	15
A401	16
A402	16
A403	18
A500	24
A501	25
A502	26
A503	27
A601	2,30
A602	2,30
A603	18
A604	18
A1000	18
A1502	27
A1503	27
A2000	30
B401	19
C1	3
C2	3
C7	3
C8	3
C9	3
C10	3
C11	3
C12	3
C13	3
C14	3
C15	3
C20	4
C21	4
C22	4
C23	4
C24	4
C25	4
C26	4
C27	4
C28	6
C29	6
C30	4
C31	4
C32	5
C33	4
C34	4
C35	4
C101	6
C102	6
C103	10
C104	10
C105	6
C106	6
C107	7
C108	7
C109	7
C110	7
C114	7
C116	7
C117	7
C118	7
C119	7
C121	7
C122	7
C123	6
C124	7
C130	6
C132	7
C133	7
C134	7
C135	7
C136	6
C137	7
C138	7
C139	7
C140	7
C141	7
C142	7
C143	7
C201	11
C202	10
C204	11
C205	11
C206	12
C207	11
C211	11
C212	11
C213	11
C214	11
C215	11
C216	11
C221	12
C222	11
C301	14
C302	14
C303	14
C304	14
C305	14
C306	19
C307	15
C308	15
C309	15
C310	14
C311	15
C312	15
C313	15
C314	15
C315	19
C316	14
C317	14
C318	13
C401	19
C402	19
C403	19
C404	16
C405	16
C406	16
C407	16
C408	19
C409	16
C410	19
C411	19
C412	16
C413	16
C416	19
C417	16
C418	16
C419	16
C420	19
C425	19
C426	16
C503	25
C504	25
C506	26
C507	26
C508	26
C509	26
C510	26
C511	26
C515	26
C516	25
C517	25
C518	25
C519	26
C522	25
C523	25
C1001	18
C1002	18
C1003	18
C1004	18
C1006	18
C1007	18
C1008	18
C1009	18
C1010	18
C1011	18
C1012	18
C1013	18
C1014	18
C1015	18
C1016	18
C1500	27
C1501	27
C1502	27
C1503	27
C1504	27
C1505	27
C1506	27
C1507	28
C1508	27
C1509	27
C1510	28
C1511	28
C1512	27
C1513	27
C1514	28
C1515	28
C1516	27
C1517	27
C1518	28
C1519	28
C1520	27
C1521	27
C1522	28
C1523	28
C1524	27
C1525	28
C1526	27

CROSS REFERENCE TO PAGE NUMBER (CONTINUED)

REFERENCE DESIGNATION	PAGE NUMBER
C1527	28
C1528	27
C1529	28
C1530	27
C1531	28
C1532	27
C1533	28
C1534	27
C1535	28
C1536	27
C1537	28
C1538	27
C1539	28
C1540	28
C1541	28
C1543	27
C1544	28
C1545	28
C1546	27
C1547	27
C1548	27
C1549	27
C1550	28
C1551	27
C1552	27
C1553	28
C1554	28
C1555	27
C1556	27
C1557	28
C1558	28
C1559	27
C1560	27
C1561	28
C1562	28
C1563	27
C1564	27
C1565	28
C1566	28
C1567	27
C1568	28
C1569	27
C1570	28
C1571	27
C1572	28
C1573	27
C1574	28
C1575	27
C1576	28
C1577	27
C1578	28
C1579	27
C1580	28
C1581	27
C1582	28
C1587	24
C1588	28
C1589	27
C1590	27
C1591	24
C1592	24
C1593	24
C1594	24
C1595	28
C2001	30
CP601	2,3
CP602	2,3
CP603	2,3
CP604	2,3
CP605	2,3
CP606	2,3
CP607	2,3
CP608	2,3
CP609	2,3
CP610	2,3
CR101	7
CR102	7
CR103	7
CR104	7
CR401	12
CR402	16
CR403	16
CR404	16
CR405	16
CR406	16
CR407	16
CR408	16
CR409	16
CR410	16
CR411	16
CR412	16
CR413	16
CR414	19
CR415	19
CR416	16
CR501	25
CR502	26
CR503	26
CR504	26
CR505	25
CR506	26
CR2001	30
DL1	20
DL2	20
DL301	20
DS401	20
DS402	20
DS403	2,20
DS404	2,20
DS405	2,20
DS406	2,20
DS1001	2,20
DS2001	30
E101	20
E102	20
E104	20
E201	20
E301	20
E302	20
E501	29
E502	29
E702	2,31
E703	2,31
E704	2,31
E706	2,31
E707	2,31
E708	2,31
E2001	30
E2002	30
F401	2,20
F402	2,20
F403	2,20
F404	2,20
F405	2,20
F406	2,20
J1	23
J101	24
J102	24
J104	24
J105	24
J201	24
J203	24
J301	24
J302	24
J501	29
J502	29
J2001	30
J2002	30
L1	3
L2	3
L3	3
L4	3
L5	3
L6	3
L9	3
L10	3
L13	5
L14	5
L15	5
L16	5
L17	5
L18	5
L19	5
L20	5
L21	5
L22	5
L101	7
L102	7
L103	6
L201	11
L202	11
L301	14
L402	20
L403	20
L404	24
L405	24
L406	20
L501	25
L502	25
L503	25
L505	25
L508	25
L510	25
L511	25
L512	25
L513	23
L514	25
L515	25
L516	25
L517	25
L518	25
L519	25
MP101	20
MP102	20
MP103	20
MP104	20
MP105	20
MP106	20

CROSS REFERENCE TO PAGE NUMBER (CONTINUED)

REFERENCE DESIGNATION	PAGE NUMBER
MP147	2,20
MP201	21
MP202	20
MP203	20
MP301	21
MP302	21
MP303	21
MP304	21
MP306	21
MP307	21
MP319	21
MP320	21
MP321	21
MP322	21
MP402	21
MP419	21
MP420	21
MP505	29
MP506	29
MP507	29
MP508	29
MP509	29
MP510	29
MP511	29
MP512	29
MP513	29
MP514	29
MP515	29
MP516	29
MP517	29
MP518	29
MP520	30
MP521	30
MP522	30
MP523	30
MP524	30
MP525	30
MP605	21
MP606	21
MP607	21
MP608	21
MP609	2,21
MP2001	30
MP2002	30
P401	18
P402	18
P501	30
P601	18
P602	18
P603	18
P604	18
P2001	30
Q201	11
Q202	11
Q401	16
Q402	16
Q403	21
Q404	21
Q405	21
Q406	16
Q407	16
Q408	16
Q409	21
Q410	16
Q411	16
Q412	16
Q413	21
Q414	16
Q415	16
Q416	21
Q417	21
Q418	21
Q419	21
Q501	25
Q502	25
Q503	25
Q504	25
R1	3
R2	3
R3	3
R4	3
R5	4
R6	4
R7	4
R8	4
R9	4
R11	4
R12	4
R13	21
R14	4
R16	4
R18	3
R19	3
R20	4
R21	3
R22	3
R23	4
R24	4
R25	4
R26	3
R27	4
R28	4
R29	4
R30	3
R31	4
R32	4
R36	4
R37	4
R38	4
R39	4
R40	4
R41	4
R45	5
R46	5
R47	5
R48	5
R49	5
R50	5
R51	5
R52	5
R53	5
R54	5
R55	5
R56	5
R61	5
R62	5
R63	5
R64	5
R65	5
R66	5
R67	5
R68	5
R69	5
R70	5
R71	5
R75	6
R76	6
R77	5
R78	5
R79	5
R80	5
R81	6
R82	6
R83	5
R84	5
R85	5
R86	5
R87	21
R88	21
R89	5
R90	5
R91	6
R92	5
R93	5
R94	6
R95	21
R96	21
R97	6
R98	6
R99	21
R101	6
R102	6
R103	10
R104	10
R106	10
R107	7
R108	7
R109	8
R110	8
R111	8
R112	8
R113	8
R114	21
R115	8
R116	8
R117	7
R118	8
R119	8
R120	8
R121	8
R122	7
R123	8
R124	7
R125	8
R130	8
R131	8
R132	8
R133	8
R135	8
R136	7
R137	8
R138	8
R139	8
R140	7
R141	8
R142	8
R143	7
R144	8

CROSS REFERENCE TO PAGE NUMBER (CONTINUED)

REFERENCE DESIGNATION	PAGE NUMBER
R145	8
R146	8
R147	8
R148	8
R149	8
R150	7
R151	7
R152	9
R153	9
R154	7
R155	7
R156	9
R157	8
R158	9
R159	9
R160	9
R161	6
R162	6
R163	21
R164	6
R165	9
R167	7
R168	9
R169	9
R170	8
R171	9
R172	9
R173	7
R174	9
R175	7
R176	9
R177	9
R178	21
R179	9
R180	9
R181	7
R182	9
R186	7
R187	7
R188	9
R189	7
R190	9
R201	11
R202	11
R203	11
R204	11
R205	12
R206	12
R207	12
R208	12
R209	10
R210	10
R211	21
R212	11
R213	11
R214	13
R215	12
R216	21
R217	13
R218	13
R221	13
R222	13
R223A/B	21
R224	13
R233	10
R234	7
R235	7
R236	7
R237	10
R238	10
R239	10
R240	10
R241	10
R242	10
R243	21
R244	11
R245	11
R246	11
R247	11
R248	11
R249	12
R250	12
R251	12
R252	11
R253	12
R254	12
R255	12
R256	12
R257	12
R258	12
R259	11
R260	11
R264	11
R265	22
R266	12
R267	12
R268	12
R269	12
R270	22
R271	12
R272	12
R273	12
R274	12
R275	12
R276	12
R277	13
R278	12
R302	14
R303	14
R304	14
R305	14
R306	14
R308	14
R309	14
R310	22
R311	22
R312	14
R313	15
R314	15
R315	15
R316	15
R317	15
R318	15
R319	14
R321	22
R322	15
R323	15
R324	22
R325	15
R326	15
R327	15
R328	15
R330	22
R331	15
R332	15
R333	15
R334	15
R335	14
R336	14
R337	15
R338	15
R339	15
R340	15
R341	13
R342	14
R343	13
R344	13
R345	13
R346	13
R347	13
R348	13
R349	13
R350	13
R351	13
R352	13
R353	13
R354	13
R355	15
R356	15
R357	15
R358	16
R359	16
R360	16
R361	21
R362	16
R363	22
R364	16
R365	16
R366	16
R367	15
R368	22
R400	22
R401	22
R402	22
R403	22
R405	22
R406	22
R407	22
R408	16
R409	16
R410	16
R411	22
R412	16
R413	17
R415	17
R416	17
R417	17
R421	22
R422	22
R423	22
R424	22
R425	17
R426	17
R427	17
R428	17
R429	17
R430	17

CROSS REFERENCE TO PAGE NUMBER (CONTINUED)

REFERENCE DESIGNATION	PAGE NUMBER
R431	22
R432	17
R433	17
R434	17
R435	17
R437	17
R438	22
R439	22
R440	22
R441	22
R442	22
R443	17
R444	17
R445	17
R446	17
R447	17
R448	17
R449	17
R450	17
R451	17
R452	21
R457	22
R458	22
R459	17
R460	22
R461	18
R462	17
R463	18
R464	22
R501	25
R502	25
R503	25
R504	30
R505	25
R507	25
R508	30
R509	25
R510A	25
R510B	25
R512	25
R513	25
R514	25
R515	25
R516	25
R517	25
R518	26
R519	25
R521	25
R522	26
R523	26
R524	26
R525	26
R526	26
R527	25
R528	25
R529	25
R531	25
R532	26
R533	26
R534	25
R535	25
R536	25
R537	25
R538	25
R539	25
R540A/B	28
R542	25
R543	30
R544	25
R545	25
R546	30
R547	25
R548	25
R549	25
R550	25
R551	25
R552	26
R553	24
R554	26
R555	27
R556	27
R557	27
R558	26
R559	27
R560	27
R561	24
R562	27
R563	27
R564	26
R565	27
R566	27
R567	26
R568	27
R569	27
R570	27
R571	26
R572	26
R573	26
R574	26
R575	26
R576	26
R579	27
R580	26
R581	26
R582	26
R583	26
R584	26
R585	26
R586	26
R587	26
R588	26
R589	26
R590	28
R591	27
R592	27
R593	27
R1001	19
R1002	21
R1003	21
R1004	21
R1005	19
R1006	19
R1007	19
R1009	23
R1010	23
R1011	22
R1012	19
R1013	19
R1014	19
R1015	19
R1016	19
R1017	18
R1018	19
R1019	19
R1020	19
R1021	19
R1023	10
R1024	21
R1025	23
R1026	19
R1027	19
R1500	28
R1501	28
R1502	28
R1503	28
R1504	28
R1505	28
R1506	28
R1507	28
R1508	28
R1509	29
R1510	29
R1511	29
R1512	29
R1513	29
R1514	29
R1515	29
R1516	29
R1617	29
R1518	29
R1519	29
R1520	29
R1521	29
R1522	29
R1523	29
R1524	29
R1530	28
R1531	28
R1532	28
R1533	28
R1534	28
R1535	28
R1536	28
R1537	28
R1538	28
R1539	29
R1540	29
R1541	29
R1542	29
R1543	29
R1544	29
R1545	29
R1546	29
R1547	29
R1548	29
R1549	29
R1550	29
R1551	24
R1552	24
R1553	24
R1560	24
R1561	24
R1563	24
R1564	24
R1568	24
R2001	30
S1	23
S101	6

CROSS REFERENCE TO PAGE NUMBER (CONTINUED)

REFERENCE DESIGNATION	PAGE NUMBER
S102	10
S201	23
S202	10
S302	13
S401	23
S402	23
S501	29
S502	24
S503	29
S504	24
S505	24
S506	30
S507	26
S1001	19
S2001	30
S2002	30
T301	23
T401	23
T501	29
TB1	23
TB2	23
TB201	10
TB301	23
TB401	23
TB402	23
TB403	25
TB404	23
TB405	23
TB406	23
TB408	23
TB2001	30
VI	4
V2	4
V3	4
V4	4
V5	4
V6	6
V7	6
V8	6
V9	6
V10	6
V11	6
V12	6
V13	6
V101	23
V102	9
V103	23
V104	23
V105	23
V107	23
V109	23
V110	9
V111	9
V113	23
V114	23
V115	23
V116	9
V201	9
V202	23
V203	23
V204	23
V205	23
V206	23
V207	23
V301	23
V303	15
V304	23
V305	23
V306	23
V307	23
V308	23
V309	23
V310	23
V311	23
V401	23
V501	30
V502	30
V503	30
V504	30
V505	30
V506	30
V507	30
V508	30
V509	27
W401	18
W603	2,30
W604	2,30
W605	18
W606	18
W701	2,31
W702	29
XDS401	23
XDS403	24
XDS404	24
XDS405	24
XDS406	24
XDS1001	24
XDS2001	30
XF401	24
XF402	24
XF403	24
XF404	24
XF405	24
XF406	24
XV1	4
XV2	4
XV3	4
XV4	4
XV5	4
XV6	6
XV7	6
XV10	6
XV11	6
XV12	6
XV13	6
XV101	9
XV103	9
XV104	9
XV105	9
XV107	9
XV109	9
XV113	9
XV114	9
XV115	9
XV201	13
XV202	13
XV203	12
XV204	12
XV205	12
XV206	10
XV207	12
XV301	15
XV301	15
XV502	26
XV503	2
XV504	26
XV505	26
XV506	22
XV507	27
XV508	27
XV304	15
XV305	24
XV306	18
XV307	15
XV308	15
XV309	15
XV310	15
XV311	15
XV401	18
XV501	26

☆ U. S. GOVERNMENT PRINTING OFFICE : 1973 O - 505-087

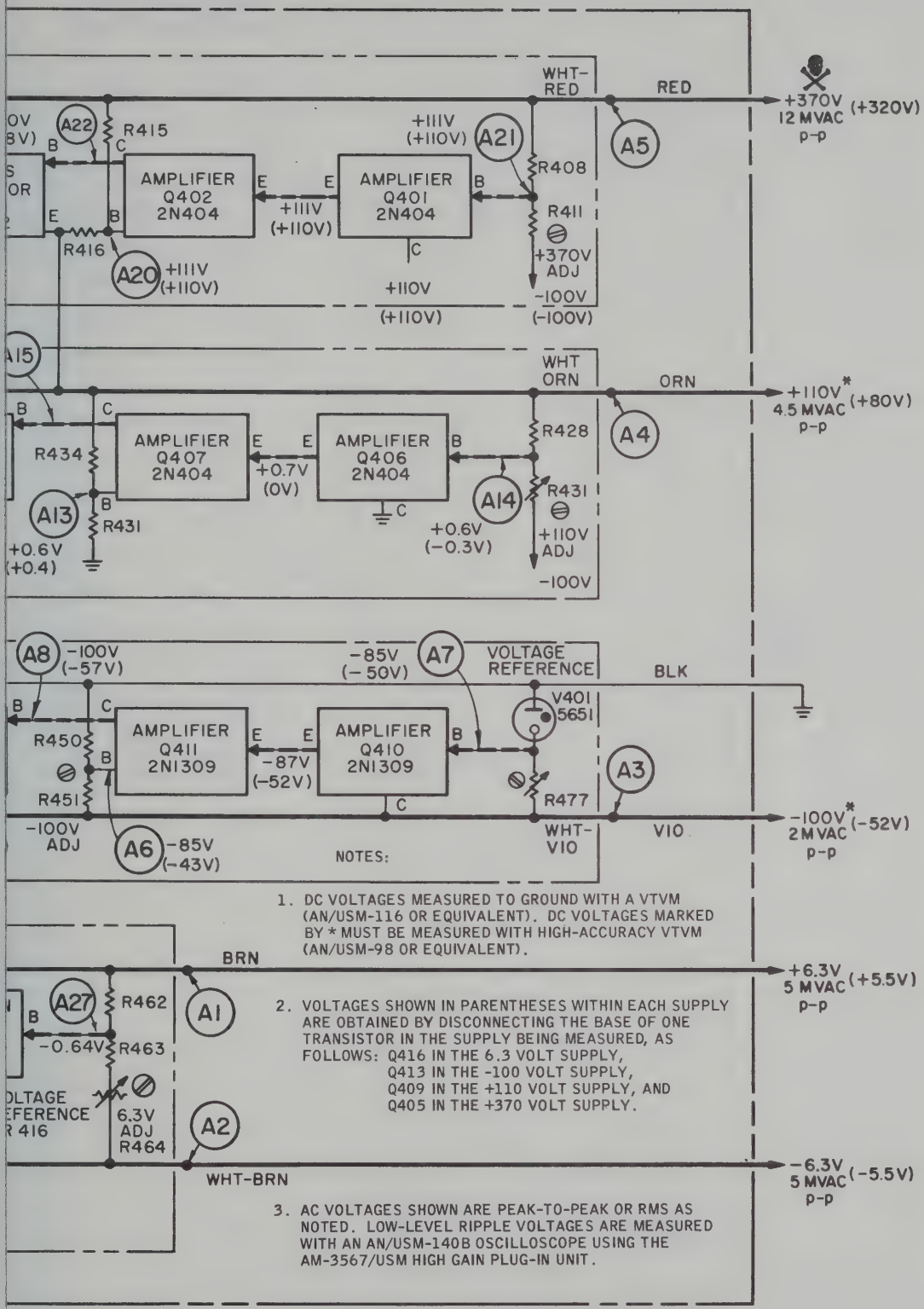

Figure 4-3. Low-Voltage Power Supply Functional and Servicing Block Diagram

CROSS REFERENCE TO PAGE NUMBER (CONTINUED)

REFERENCE DESIGNATION	PAGE NUMBER
S102	10
S201	23
S202	10
S302	13
S401	23
S402	23
S501	29
S502	24
S503	29
S504	24
S505	24
S506	30
S507	26
S1001	19
S2001	30
S2002	30
T301	23
T401	23
T501	29
TB1	23
TB2	23
TB201	10
TB301	23
TB401	23
TB402	23
TB403	25
TB404	23
TB405	23
TB406	23
TB408	23
TB2001	30
VI	4
V2	4
V3	4
V4	4
V5	4
V6	6
V7	6
V8	6
V9	6
V10	6
V11	6
V12	6
V13	6
V101	23
V102	9
V103	23
V104	23
V105	23
V107	23
V109	23
V110	9
V111	9
V113	23
V114	23
V115	23
V116	9
V201	9
V202	23
V203	23
V204	23
V205	23
V206	23
V207	23
V301	23
V303	15
V304	23
V305	23
V306	23
V307	23
V308	23
V309	23
V310	23
V311	23
V401	23
V501	30
V502	30
V503	30
V504	30
V505	30
V506	30
V507	30
V508	30
V509	27
W401	18
W603	2,30
W604	2,30
W605	18
W606	18
W701	2,31
W702	29
XDS401	23
XDS403	24
XDS404	24
XDS405	24
XDS406	24
XDS1001	24
XDS2001	30
XF401	24
XF402	24
XF403	24
XF404	24
XF405	24
XF406	24
XV1	4
XV2	4
XV3	4
XV4	4
XV5	4
XV6	6
XV7	6
XV10	6
XV11	6
XV12	6
XV13	6
XV101	9
XV103	9
XV104	9
XV105	9
XV107	9
XV109	9
XV113	9
XV114	9
XV115	9
XV201	13
XV202	13
XV203	12
XV204	12
XV205	12
XV206	10
XV207	12
XV301	15
XV301	15
XV502	26
XV503	2[illegible]
XV504	26
XV505	26
XV506	22
XV507	27
XV508	27
XV304	15
XV305	24
XV306	18
XV307	15
XV308	15
XV309	15
XV310	15
XV311	15
XV401	18
XV501	26

☆ U. S. GOVERNMENT PRINTING OFFICE : 1973 O - 505-087

Typical Peak-to-Peak Ripple Voltage Levels

TEST POINT	VOLTS
A4-A5	6 mv
A20-A22	10 mv
A22-A25	11 V
A5-A25	11 V
A26	675 V
A4-Gnd	4.5 mv
A13-A16	20 mv
A16-A18	10 V
A4-A18	11 V
A19	475 V
A3-Gnd	2 mv
A6-A9	3 mv
A9-A11	8 V
A12	425 V
A1-A2	2.5 mv
A27-A28	75. mv
A28-A30	1.2 V
A1-A30	1.2 V
A31	130 V

Figure 4-3

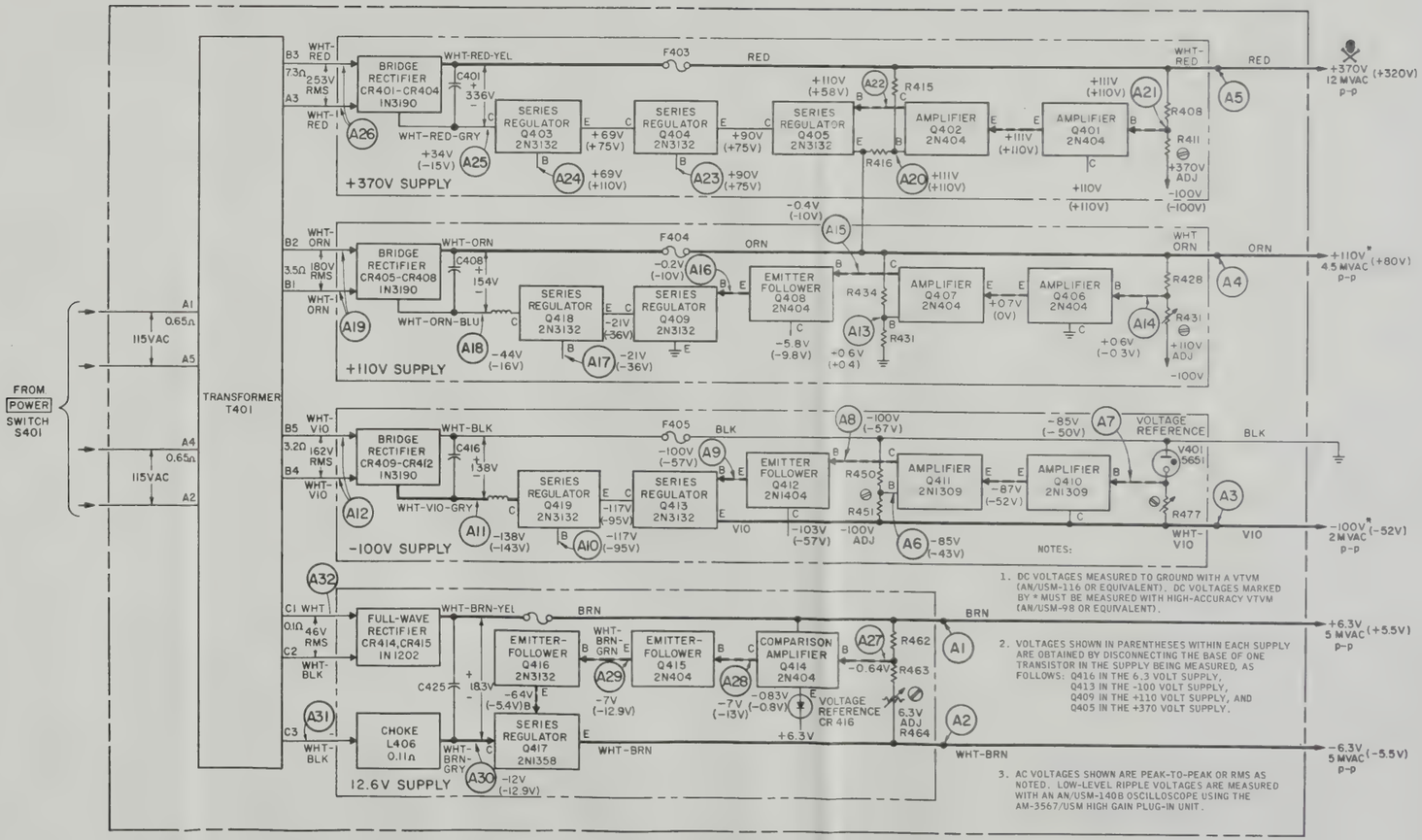

Figure 4-3. Low-Voltage Power Supply Functional and Servicing Block Diagram

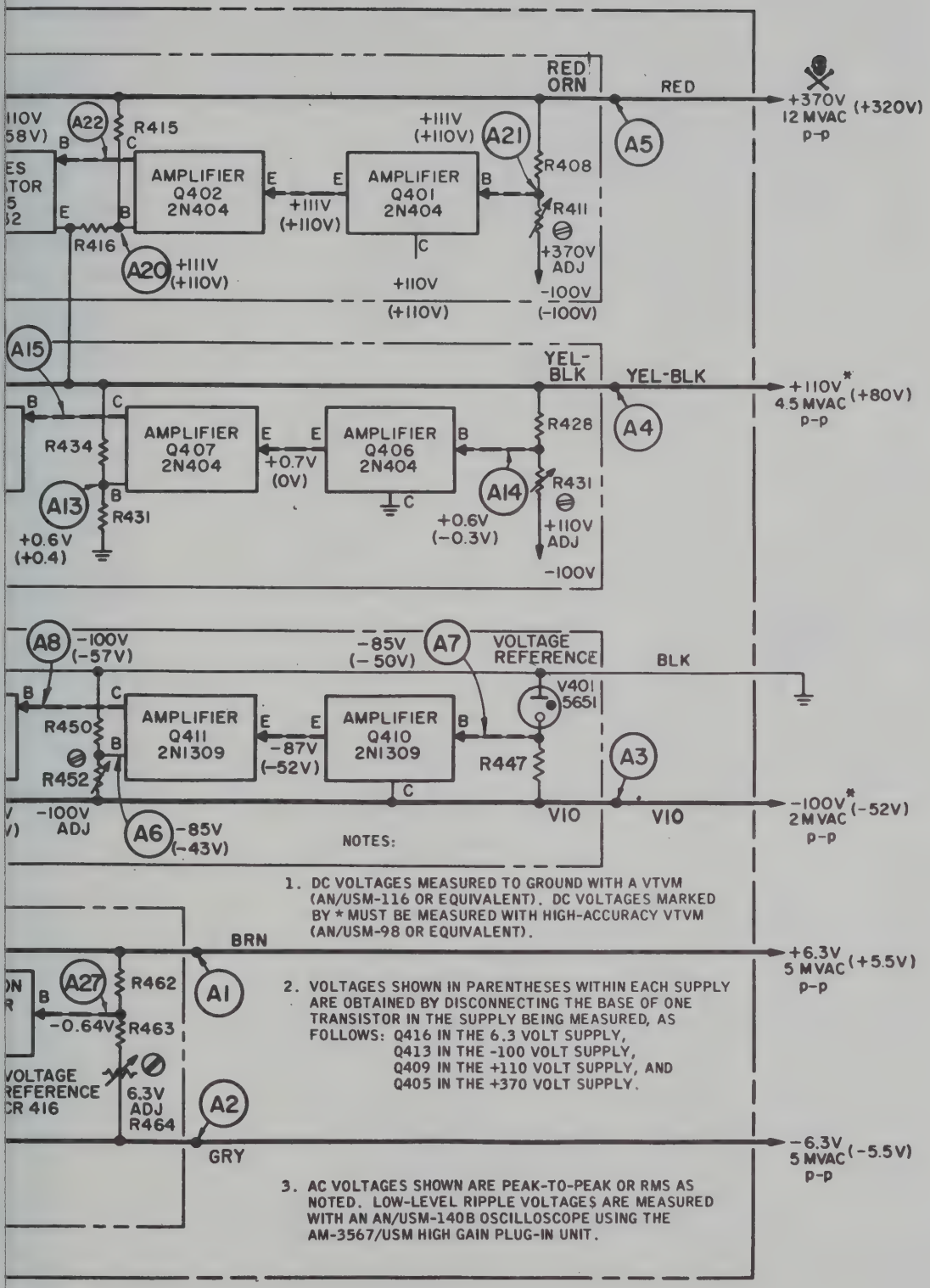

ure 4-3A. Low-Voltage Power Supply Functional and Servicing Block Diagram, AN/USM-140C

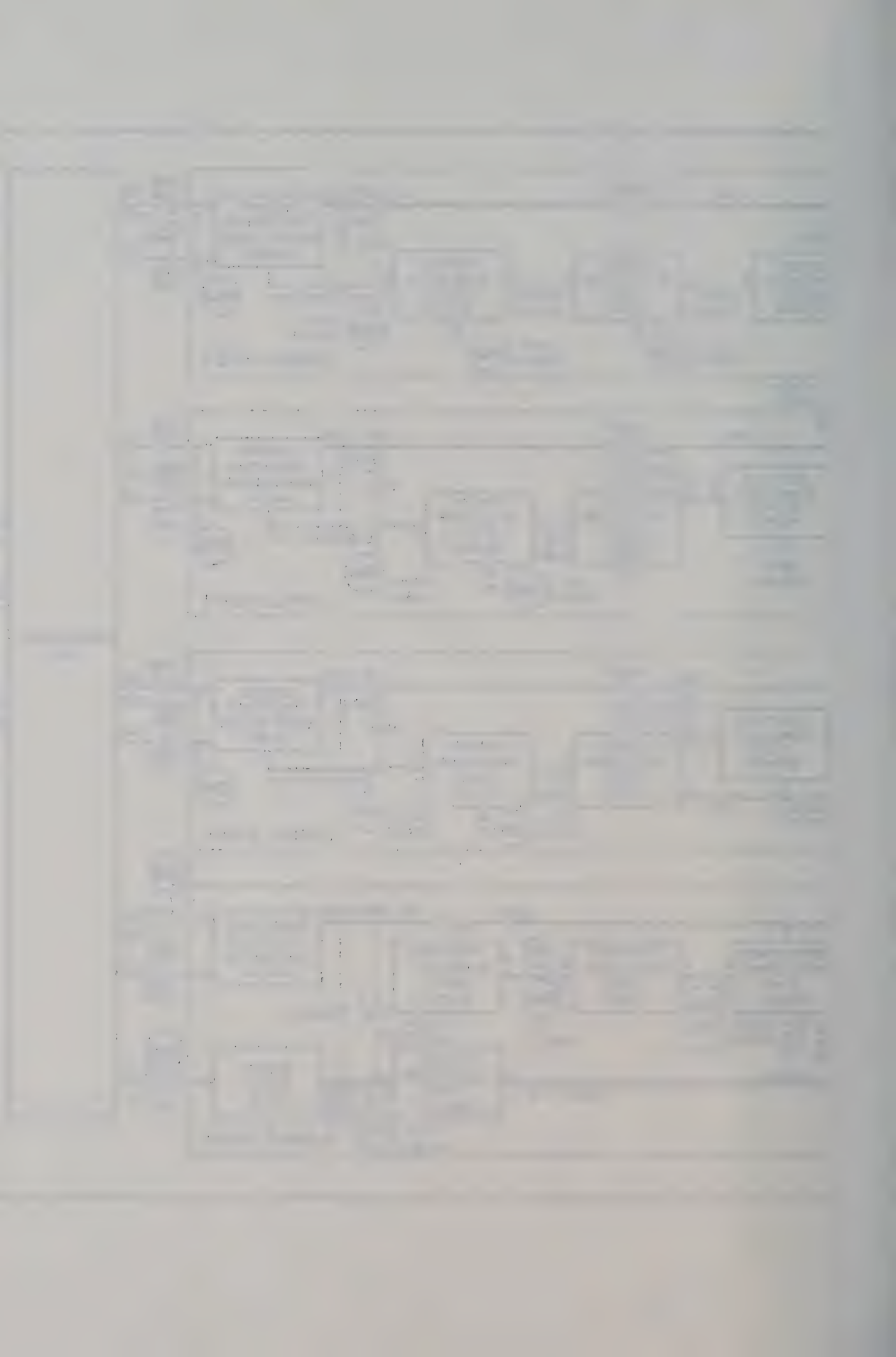

Typical Peak-to-Peak Ripple Voltage Levels

TEST POINT	VOLTS
A4-A5	6 mv
A20-A22	10 mv
A22-A25	11 V
A5-A25	11 V
A26	675 V
A4-Gnd	4.5 mv
A13-A16	20 mv
A16-A18	10 V
A4-A18	11 V
A19	475 V
A3-Gnd	2 mv
A6-A9	3 mv
A9-A11	8 V
A12	425 V
A1-A2	2.5 mv
A27-A28	75. mv
A28-A30	1.2 V
A1-A30	1.2 V
A31	130 V

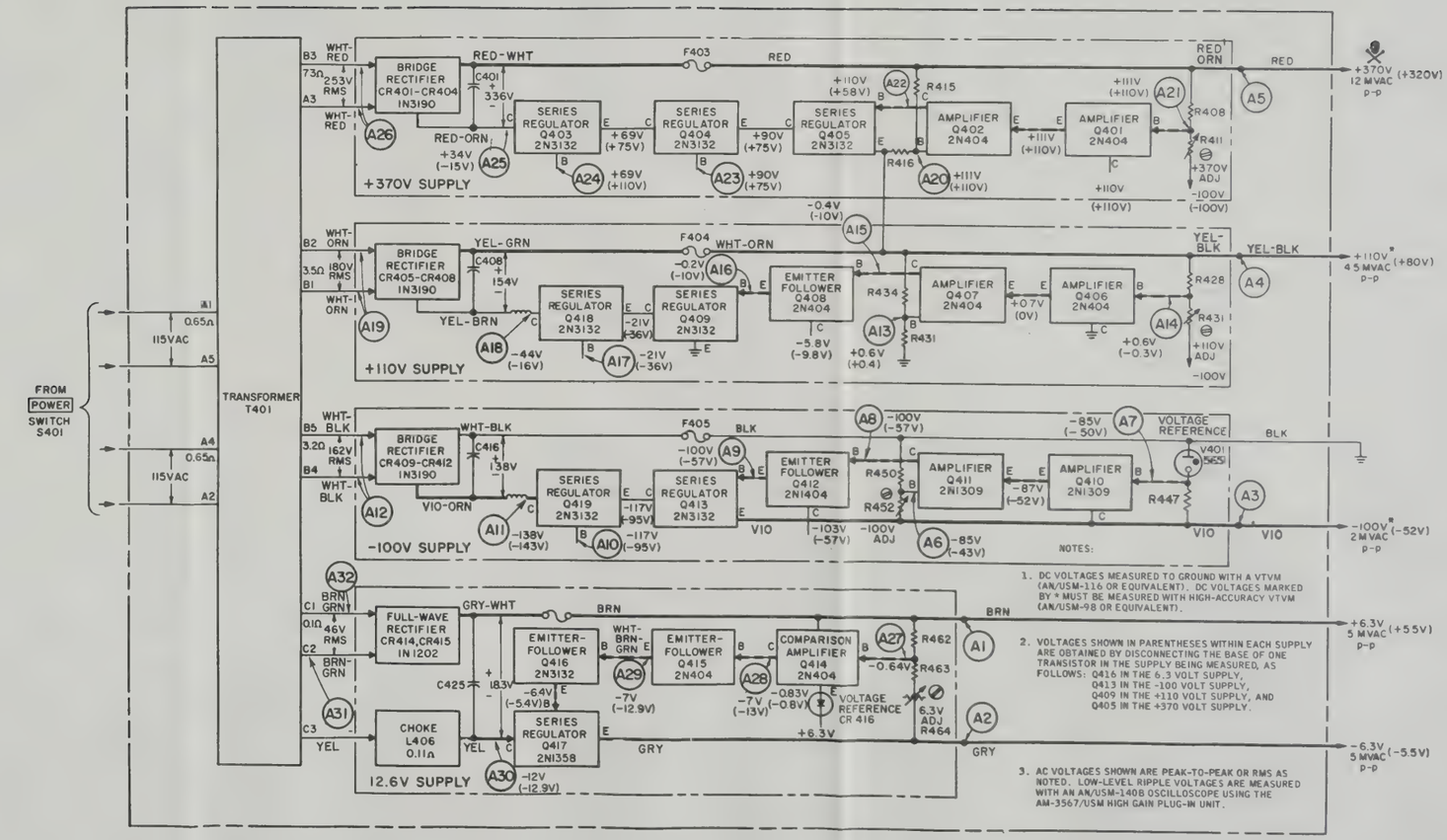
FROM POWER SWITCH S401
TRANSFORMER T401
+370V SUPPLY
+110V SUPPLY
-100V SUPPLY
12.6V SUPPLY
BRIDGE RECTIFIER CR401-CR404 1N3190
BRIDGE RECTIFIER CR405-CR408 1N3190
BRIDGE RECTIFIER CR409-CR412 1N3190
FULL-WAVE RECTIFIER CR414,CR415 1N1202
SERIES REGULATOR Q403 2N3132
SERIES REGULATOR Q404 2N3132
SERIES REGULATOR Q405 2N3132
SERIES REGULATOR Q418 2N3132
SERIES REGULATOR Q409 2N3132
SERIES REGULATOR Q419 2N3132
SERIES REGULATOR Q413 2N3132
SERIES REGULATOR Q417 2N1358
EMITTER FOLLOWER Q408 2N404
EMITTER FOLLOWER Q412 2N1404
EMITTER-FOLLOWER Q416 2N3132
EMITTER-FOLLOWER Q415 2N404
COMPARISON AMPLIFIER Q414 2N404
AMPLIFIER Q402 2N404
AMPLIFIER Q401 2N404
AMPLIFIER Q407 2N404
AMPLIFIER Q406 2N404
AMPLIFIER Q411 2N1309
AMPLIFIER Q410 2N1309
VOLTAGE REFERENCE
VOLTAGE REFERENCE CR 416
CHOKE L406 0.11Ω
+370V 12 MVAC p-p (+320V)
+110V 45 MVAC p-p (+80V)
-100V 2 MVAC p-p (-52V)
+6.3V 5 MVAC p-p (+5.5V)
-6.3V 5 MVAC p-p (-5.5V)
NOTES:
1. DC VOLTAGES MEASURED TO GROUND WITH A VTVM (AN/USM-116 OR EQUIVALENT). DC VOLTAGES MARKED BY * MUST BE MEASURED WITH HIGH-ACCURACY VTVM (AN/USM-98 OR EQUIVALENT).
2. VOLTAGES SHOWN IN PARENTHESES WITHIN EACH SUPPLY ARE OBTAINED BY DISCONNECTING THE BASE OF ONE TRANSISTOR IN THE SUPPLY BEING MEASURED, AS FOLLOWS: Q416 IN THE 6.3 VOLT SUPPLY, Q413 IN THE -100 VOLT SUPPLY, Q409 IN THE +110 VOLT SUPPLY, AND Q405 IN THE +370 VOLT SUPPLY.
3. AC VOLTAGES SHOWN ARE PEAK-TO-PEAK OR RMS AS NOTED. LOW-LEVEL RIPPLE VOLTAGES ARE MEASURED WITH AN AN/USM-140B OSCILLOSCOPE USING THE AM-3567/USM HIGH GAIN PLUG-IN UNIT.

Figure 4-3A. Low-Voltage Power Supply Functional and Servicing Block Diagram, AN/USM-140C

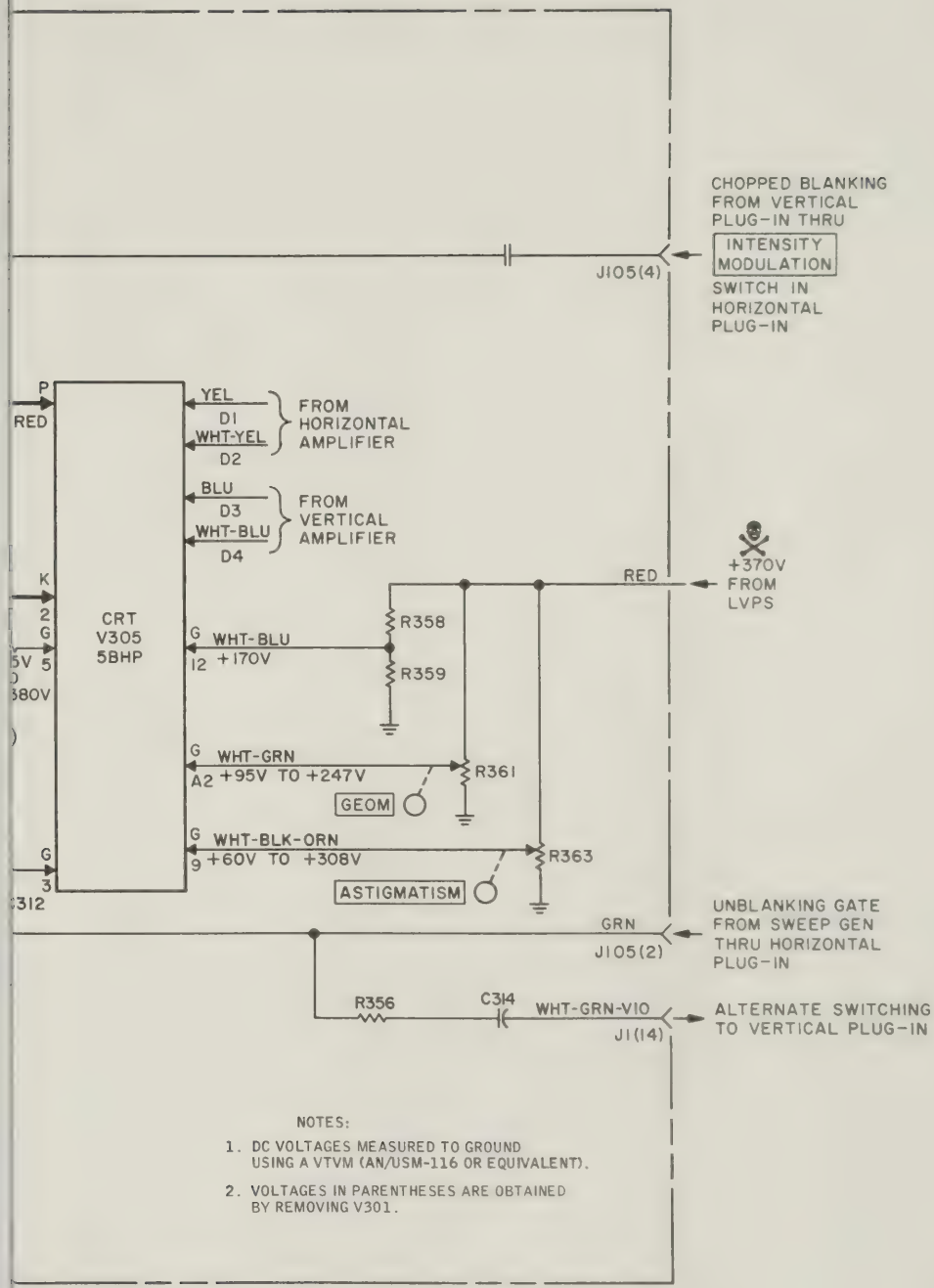

Figure 4-4. High-Voltage Power Supply Functional and Servicing Block Diagram

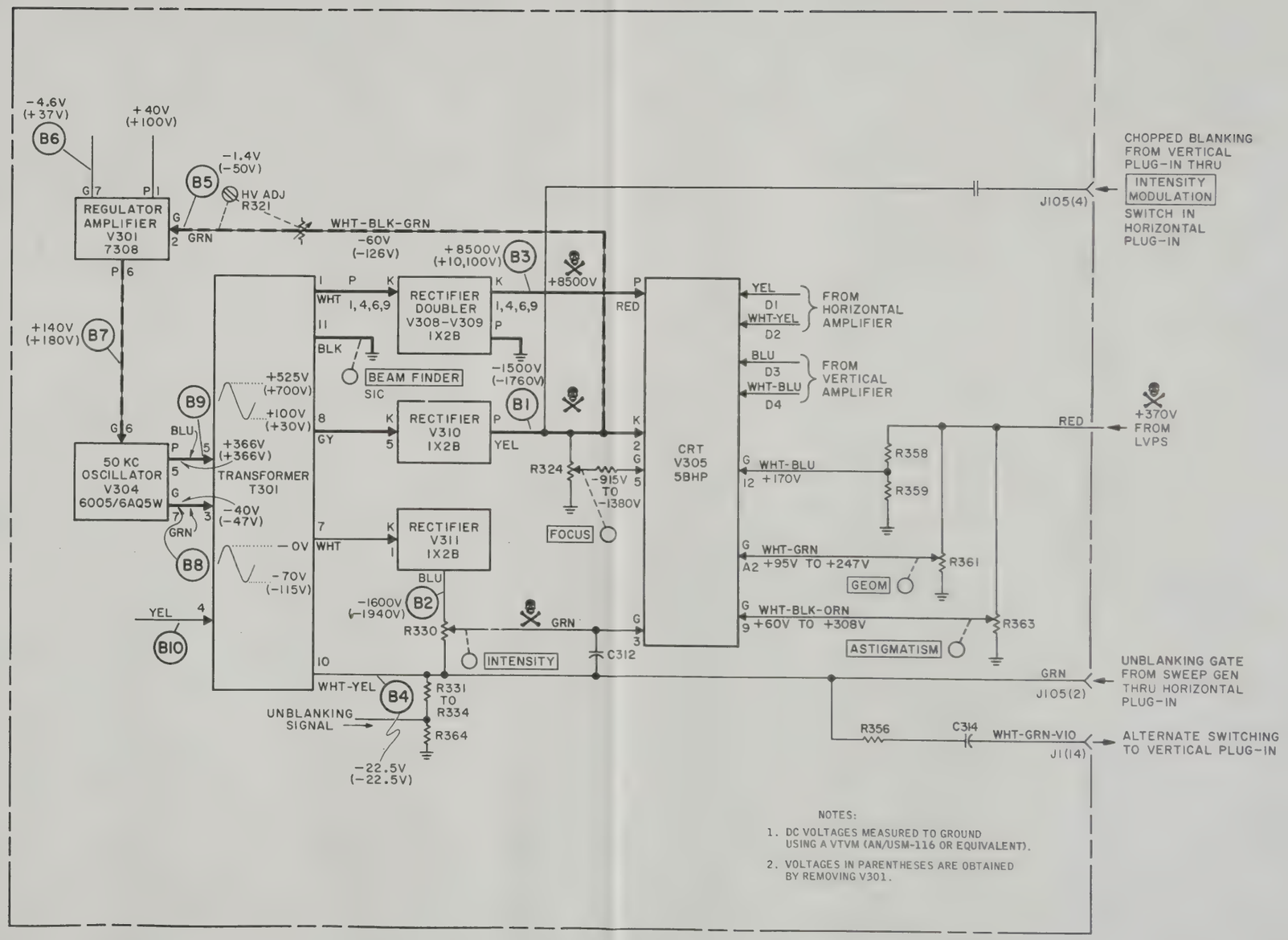

Figure 4-4. High-Voltage Power Supply Functional and Servicing Block Diagram

FIER AI

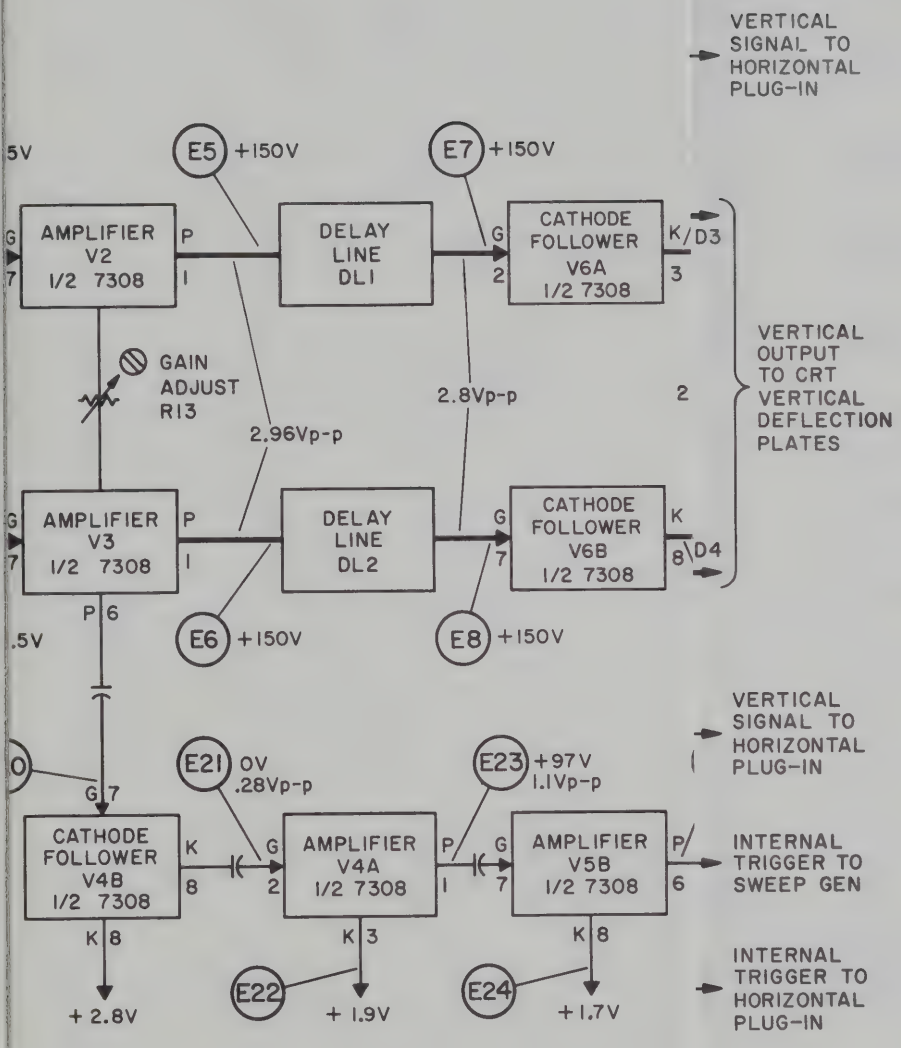
VERTICAL SIGNAL TO HORIZONTAL PLUG-IN
5V
E5 +150V
E7 +150V
AMPLIFIER V2 1/2 7308
DELAY LINE DL1
CATHODE FOLLOWER V6A 1/2 7308
K/D3
GAIN ADJUST R13
2.96Vp-p
2.8Vp-p
VERTICAL OUTPUT TO CRT VERTICAL DEFLECTION PLATES
AMPLIFIER V3 1/2 7308
DELAY LINE DL2
CATHODE FOLLOWER V6B 1/2 7308
D4
.5V
E6 +150V
E8 +150V
VERTICAL SIGNAL TO HORIZONTAL PLUG-IN
E21 0V .28Vp-p
E23 +97V 1.1Vp-p
CATHODE FOLLOWER V4B 1/2 7308
AMPLIFIER V4A 1/2 7308
AMPLIFIER V5B 1/2 7308
INTERNAL TRIGGER TO SWEEP GEN
+2.8V
E22 +1.9V
E24 +1.7V
INTERNAL TRIGGER TO HORIZONTAL PLUG-IN

Typical DC Voltages in the Vertical Amplifier
for the Following Indicated Spot Positions

Test Point	Location	Voltage (Spot 2 cm High) (Spot Center) (Spot 2 cm Low)	Test Point	Location	Voltage (Spot 2 cm High) (Spot Center) (Spot 2 cm Low)
E1	V1(2)	-1.87 -2.07 -2.28	None	V7(6)	+2.4 +1.55 +0.75
E2	V1(7)	-2.28 -2.07 -1.87	E11	V11(7)	+0.75 +1.6 +2.5
E3	V1(3) V2(7)	-0.12 -0.33 -0.55	E12	V11(2)	+2.5 +1.6 +0.75
E4	V1(8) V3(7)	-0.55 -0.33 -0.12	E13	V11(6)	+94.5 +94.3 +94.1
None	V2(6)	+71.6 +71.8 +72	E14	V11(1)	+94.1 +94.3 +94.5
None	V3(6)	+72 +71.8 +71.6	None	V11(8)	+2.5 +3.3 +4.0
E5	V2(1) V6(2)	+149 +150 +151	None	V11(3)	+4.0 +3.3 +2.5
E6	V3(1) V6(7)	+151 +150 +149	E15	V12(1)	+187 +181 +175
E9	V6(3)	+150 +151 +152	E16	V13(1)	+175 +181 +187
E10	V6(8)	+152 +151 +150	E18	V10(8)	+3.1 +4.0 +4.8
None	V7(1)	+0.75 +1.55 +2.4	E19	V10(3)	+4.8 +4.0 +3.1

Conditions of Measurement: Spot set to the three positions using the VERTICAL POSITION control. The voltages shown on the schematic correspond to spot center.

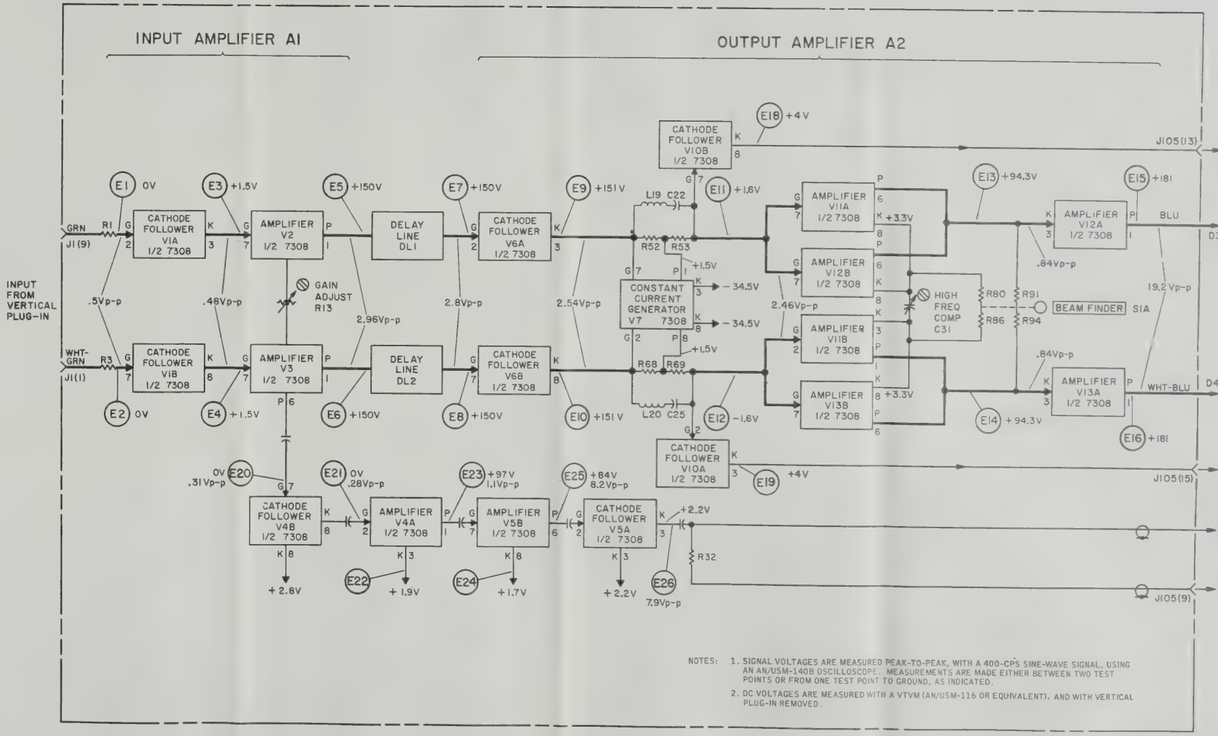

Figure 4-8. Main Vertical Amplifier Functional and Servicing Block Diagram

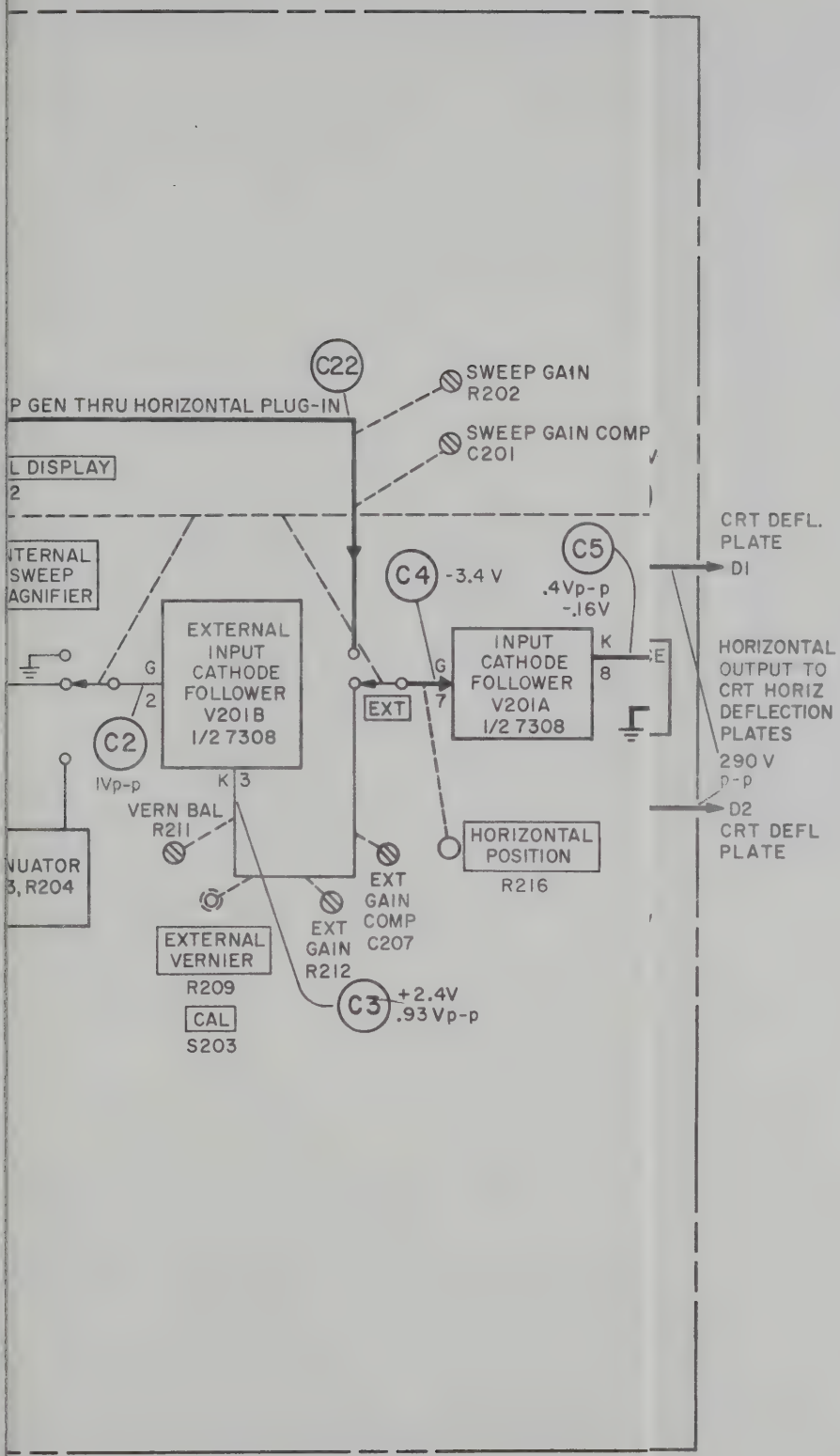
C22
SWEEP GAIN
R202
P GEN THRU HORIZONTAL PLUG-IN
SWEEP GAIN COMP
C201
L DISPLAY
2
CRT DEFL.
PLATE
D1
C5
.4Vp-p
-.16V
C4
-3.4 V
ITERNAL
SWEEP
AGNIFIER
EXTERNAL
INPUT
CATHODE
FOLLOWER
V201B
1/2 7308
INPUT
CATHODE
FOLLOWER
V201A
1/2 7308
K
8
G
2
G
7
EXT
HORIZONTAL
OUTPUT TO
CRT HORIZ
DEFLECTION
PLATES
290 V
p-p
C2
IVp-p
K
3
VERN BAL
R211
D2
CRT DEFL
PLATE
NUATOR
3, R204
HORIZONTAL
POSITION
R216
EXT
GAIN
COMP
C207
EXT
GAIN
R212
EXTERNAL
VERNIER
R209
CAL
S203
C3
+2.4V
.93Vp-p

Typical DC Voltages in the Horizontal Amplifier for the Following Indicated Spot Positions

Test Point	Location	Voltage vs Spot Location 2 cm Left	Center	2 cm Right
C4	V201(7)	-3.3	-3.1	-2.9
C5	V202(2)	0.058	-0.16	0.37
C6	V202(3)	+2.1	+2.2	+2.3
C7	V202(8)	+2.3	+2.2	+2.1
C8	Q201(E)	+2.1	+2.2	+2.3
C9	Q202(E)	+2.3	+2.2	+2.1
C10	Q201(B), Q202(B)	+1.9	+2.0	+2.1
C11	Q201(C)	+14.8	+13.8	+12.8
C12	Q202(C)	+12.8	+13.8	+14.8
C13	V204(2,9)	-12	-11	-10
C14	V205(2,9)	-10	-11	-12
C15	V204(1), V205(1)	-8.0	-8.0	-8.0
C16	V206(7)	+217.5	+142	+73
C17	V206(2)	+73	+142	+217.5
C18	R245-R246	+63	+42.	+21
C19	R259-R260	+21	+42.	+63
C20	V206(8)	+225	+147	+75
C21	V206(3)	+75	+147	+225
None	"+370 (B)"	+322	+311	+294

Conditions of Measurement:

Spot set to the three positions using the HORIZONTAL POSITION control; HORIZONTAL DISPLAY switch set to .1 MV/CM; application of the voltmeter test probe shall not deflect the spot. The voltages shown on schematic correspond to spot center.

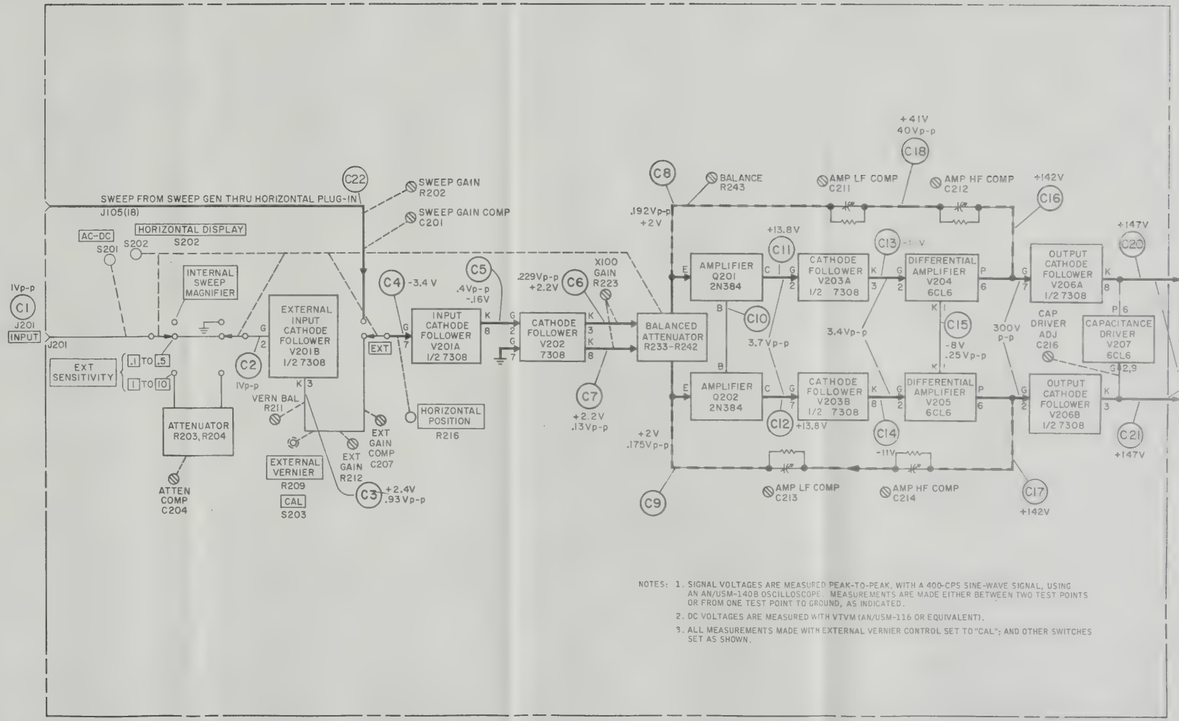
SWEEP FROM SWEEP GEN THRU HORIZONTAL PLUG-IN J105(18)
SWEEP GAIN R202
SWEEP GAIN COMP C201
HORIZONTAL DISPLAY
AC-DC S201
S202
INTERNAL SWEEP MAGNIFIER
EXTERNAL INPUT CATHODE FOLLOWER V201B 1/2 7308
INPUT CATHODE FOLLOWER V201A 1/2 7308
CATHODE FOLLOWER V202 7308
BALANCED ATTENUATOR R233-R242
X100 GAIN R223
AMPLIFIER Q201 2N384
AMPLIFIER Q202 2N384
CATHODE FOLLOWER V203A 1/2 7308
CATHODE FOLLOWER V203B 1/2 7308
DIFFERENTIAL AMPLIFIER V204 6CL6
DIFFERENTIAL AMPLIFIER V205 6CL6
OUTPUT CATHODE FOLLOWER V206A 1/2 7308
OUTPUT CATHODE FOLLOWER V206B 1/2 7308
BALANCE R243
AMP LF COMP C211
AMP HF COMP C212
AMP LF COMP C213
AMP HF COMP C214
CAP DRIVER ADJ C216
CAPACITANCE DRIVER V207 6CL6
EXT SENSITIVITY
ATTENUATOR R203, R204
ATTEN COMP C204
VERN BAL R211
EXTERNAL VERNIER R209
CAL S203
EXT GAIN COMP C207
EXT GAIN R212
HORIZONTAL POSITION R216
CRT DEFL. PLATE D1
CRT DEFL PLATE D2
HORIZONTAL OUTPUT TO CRT HORIZ DEFLECTION PLATES
NOTES: 1. SIGNAL VOLTAGES ARE MEASURED PEAK-TO-PEAK, WITH A 400-CPS SINE-WAVE SIGNAL, USING AN AN/USM-140B OSCILLOSCOPE. MEASUREMENTS ARE MADE EITHER BETWEEN TWO TEST POINTS OR FROM ONE TEST POINT TO GROUND, AS INDICATED.
2. DC VOLTAGES ARE MEASURED WITH VTVM (AN/USM-116 OR EQUIVALENT).
3. ALL MEASUREMENTS MADE WITH EXTERNAL VERNIER CONTROL SET TO "CAL"; AND OTHER SWITCHES SET AS SHOWN.

Figure 4-9. Horizontal Amplifier Functional and Servicing Block Diagram

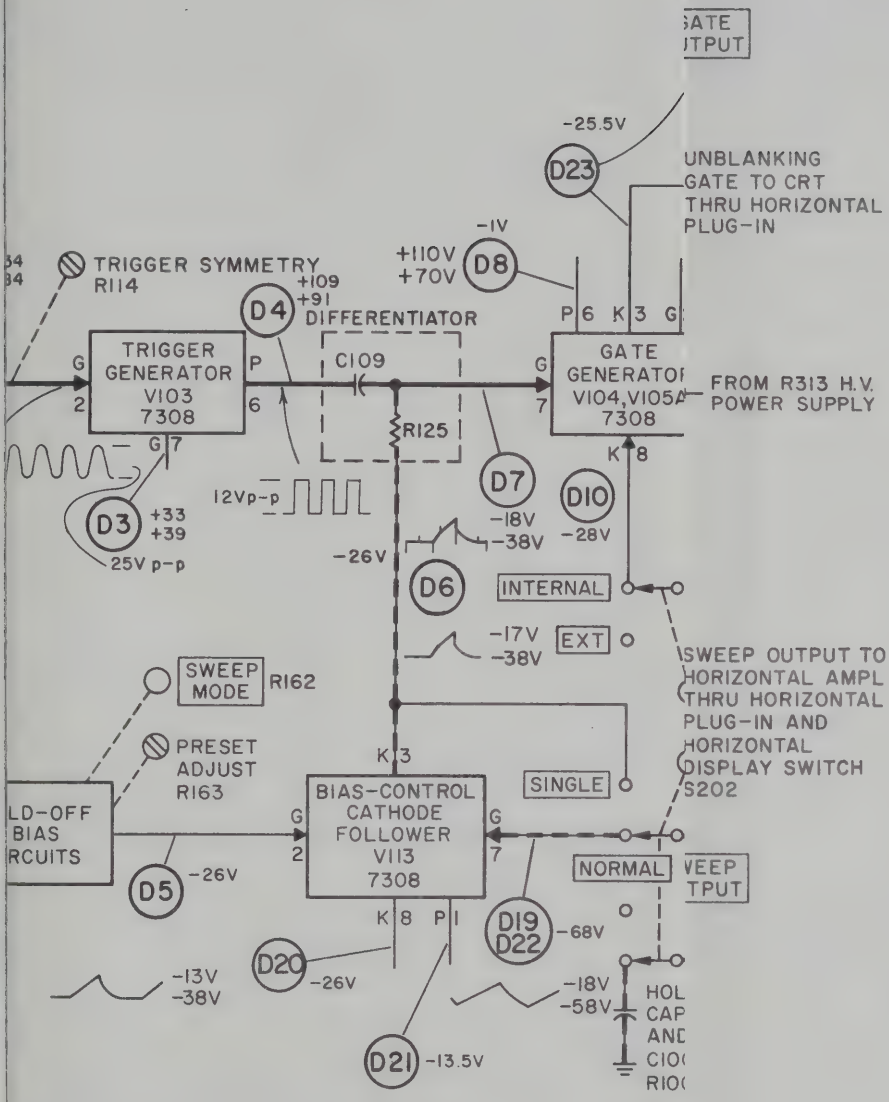
GATE
UTPUT
-25.5V
D23
UNBLANKING
GATE TO CRT
THRU HORIZONTAL
PLUG-IN
-1V
+110V
+70V
D8
TRIGGER SYMMETRY
R114
+109
+91
D4
DIFFERENTIATOR
P 6 K 3 G
TRIGGER
GENERATOR
V103
7308
C109
GATE
GENERATOR
V104,V105
7308
FROM R313 H.V.
POWER SUPPLY
R125
D7
-18V
-38V
D10
-28V
K 8
12Vp-p
D3
+33
+39
25V p-p
-26V
D6
INTERNAL
-17V
-38V
EXT
SWEEP OUTPUT TO
HORIZONTAL AMPL
THRU HORIZONTAL
PLUG-IN AND
HORIZONTAL
DISPLAY SWITCH
S202
SWEEP
MODE
R162
PRESET
ADJUST
R163
K 3
SINGLE
BIAS-CONTROL
CATHODE
FOLLOWER
V113
7308
LD-OFF
BIAS
RCUITS
D5
-26V
NORMAL
VEEP
TPUT
K 8 P 1
D19
D22
-68V
D20
-26V
-13V
-38V
-18V
-58V
HOL
CAP
AND
CIO
RIO
D21
-13.5V

Supplementary Troubleshooting Voltages for
Non-Operating Sweep

NOTE: Voltages measured by disconnecting R124 from TP D7 and with a clip lead alternately connecting R124 to -100 volts (from any violet lead) and then momentarily to ground; voltage measured for each state with the voltage measured in the grounded condition listed first.

Test Point	Location	Voltage (R124 grounded) (R124 at -100V)	Test Point	Location	Voltage (R124 grounded) (R124 at -100V)
D6	R171	-38. -5.3	D16	V105(7)	-51 -52.
D7	V104(7)	-0.36 v -100. v	D17	R175	-75. -8.4
D8	V104(6)	+8. +110.	D18	V114(8)	-66. -3.
None	V104(2)	-22.9 +50.6	D19	V113(7)	-66. -3.
D9	V105(2)	-51. -17.	D20	V113(8)	-38. -0.04
D10	V105(3)	-1.8 -17.	D21	V113(1)	-7. +82.
D11	V105(1)	-4.2 -6.5	D22	see D19	
D12	R151	-4.6 -7.	D23	V107(2)	-20. +51.
D13	V109(6)	+66.5 +332.	D24	V107(3)	-16. +52.
R157 junction with WHT-ORN lead		+95. +36.	D25	V107(7)	-15. +50.
D14	R155	-58. +83.	D26	V107(8)	0 +53.
D15	V115(8)	-51. +85.	D27	V114(2)	-51. +80.
			D28	V114(3)	-46. +81.

Waveforms for Test Points Indicated

Figure 4-11

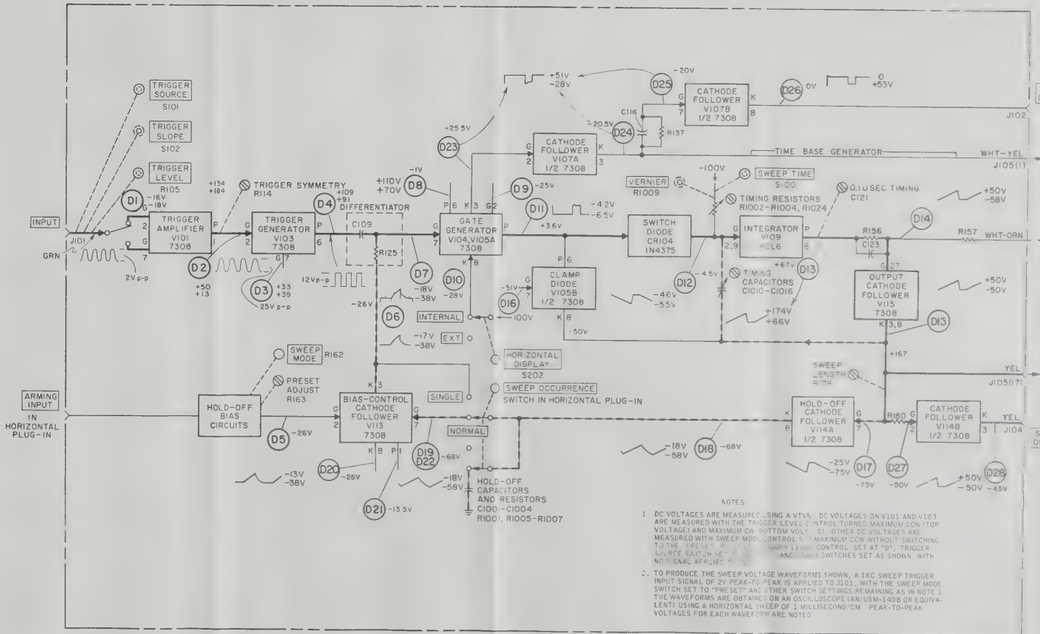
TRIGGER SOURCE S101
TRIGGER SLOPE S102
TRIGGER LEVEL R105
INPUT J101
GRN
2V p-p
TRIGGER AMPLIFIER V101 7308
TRIGGER SYMMETRY R114
TRIGGER GENERATOR V103 7308
12V p-p
25V p-p
DIFFERENTIATOR C109 R125
GATE GENERATOR V104,V105A 7308
CATHODE FOLLOWER V107B 1/2 7308
GATE OUTPUT J102
CATHODE FOLLOWER V107A 1/2 7308
TIME BASE GENERATOR
WHT-YEL J105(1)
UNBLANKING GATE TO CRT THRU HORIZONTAL PLUG-IN
VERNIER R1009
SWEEP TIME S100
TIMING RESISTORS R1002-R1004, R1024
0.1 U SEC TIMING C121
SWITCH DIODE CR104 IN4375
INTEGRATOR V109 6DL6
TIMING CAPACITORS C1001-C1016
CLAMP DIODE V105B 1/2 7308
OUTPUT CATHODE FOLLOWER V115 7308
FROM R313 H.V. POWER SUPPLY
SWEEP OUTPUT TO HORIZONTAL AMPL THRU HORIZONTAL PLUG-IN AND HORIZONTAL DISPLAY SWITCH S202
SWEEP OUTPUT J104
ARMING INPUT IN HORIZONTAL PLUG-IN
HOLD-OFF BIAS CIRCUITS
SWEEP MODE R162
PRESET ADJUST R163
BIAS-CONTROL CATHODE FOLLOWER V113 7308
HORIZONTAL DISPLAY S202
SWEEP OCCURRENCE SWITCH IN HORIZONTAL PLUG-IN
SINGLE
NORMAL
INTERNAL
EXT
HOLD-OFF CAPACITORS AND RESISTORS C1001-C1004 R1001, R1005-R1007
HOLD-OFF CATHODE FOLLOWER V114A 1/2 7308
CATHODE FOLLOWER V114B 1/2 7308
NOTES:
1. DC VOLTAGES ARE MEASURED USING A VTVM. DC VOLTAGES ON V101 AND V103 ARE MEASURED WITH THE TRIGGER LEVEL CONTROL TURNED MAXIMUM CCW-TOP VOLTAGE) AND MAXIMUM CW-BOTTOM VOLTAGE. ALL OTHER DC VOLTAGES ARE MEASURED WITH SWEEP MODE CONTROL S[illegible] MAXIMUM CCW WITH LT SWITCHING TO THE [illegible] SWITCH S[illegible] CONTROL SET AT "0". TRIGGER SOURCE SWITCH [illegible] AND [illegible] SWITCHES SET AS SHOWN WITH NO SIGNAL APPLIED.
2. TO PRODUCE THE SWEEP VOLTAGE WAVEFORMS SHOWN, A 1 KC SWEEP TRIGGER INPUT SIGNAL OF 2V PEAK-TO-PEAK IS APPLIED TO J101, WITH THE SWEEP MODE SWITCH SET TO "PRESET" AND OTHER SWITCH SETTINGS REMAINING AS IN NOTE 1. THE WAVEFORMS ARE OBTAINED ON AN OSCILLOSCOPE (AN/USM-140B OR EQUIVALENT) USING A HORIZONTAL SWEEP OF 1 MILLISECOND/CM. PEAK-TO-PEAK VOLTAGES FOR EACH WAVEFORM ARE NOTED.

Figure 4-11. Sweep Generator Functional and Servicing Block Diagram

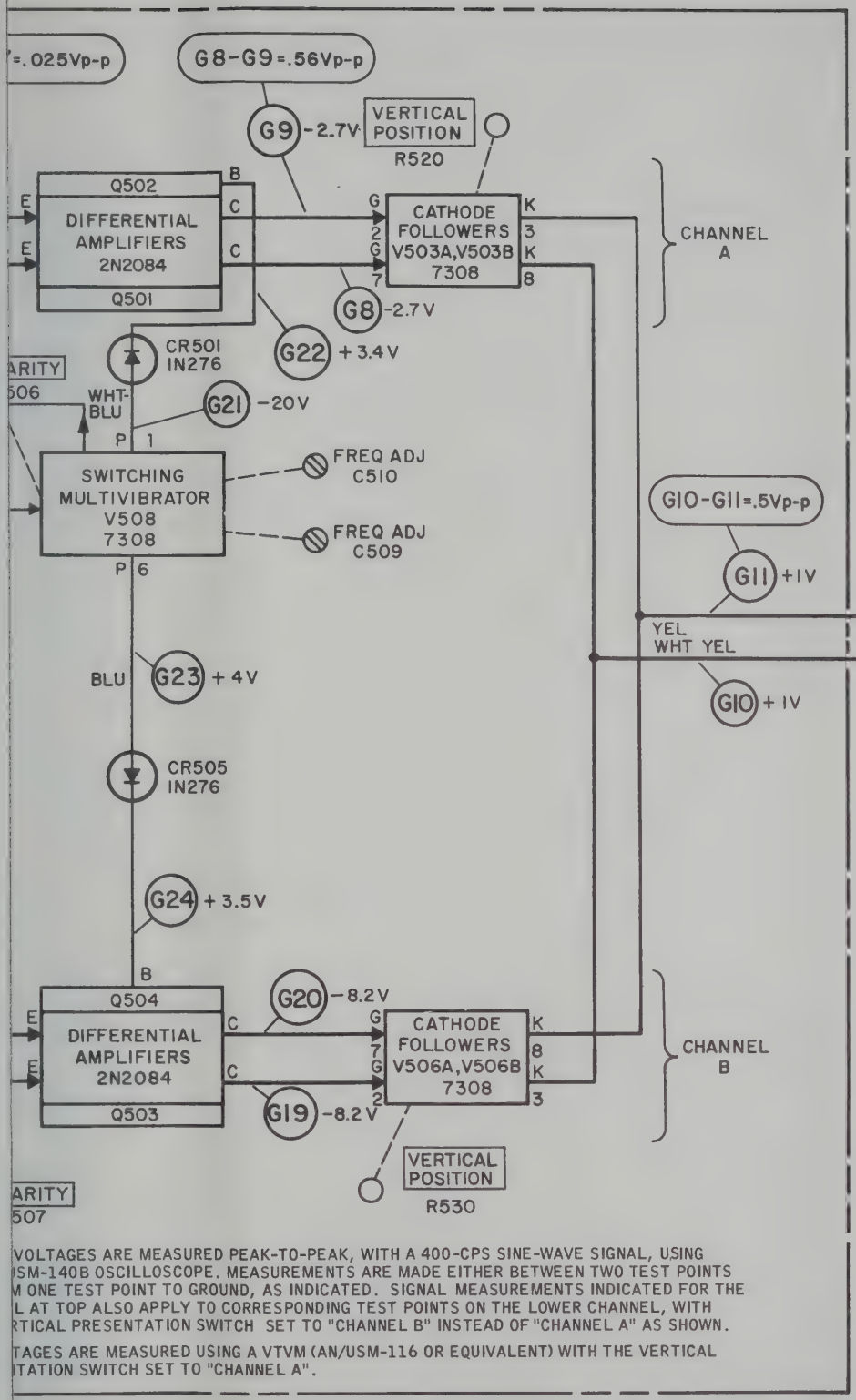

Figure 4-13. Vertical Plug-In Functional and Servicing Block Diagram

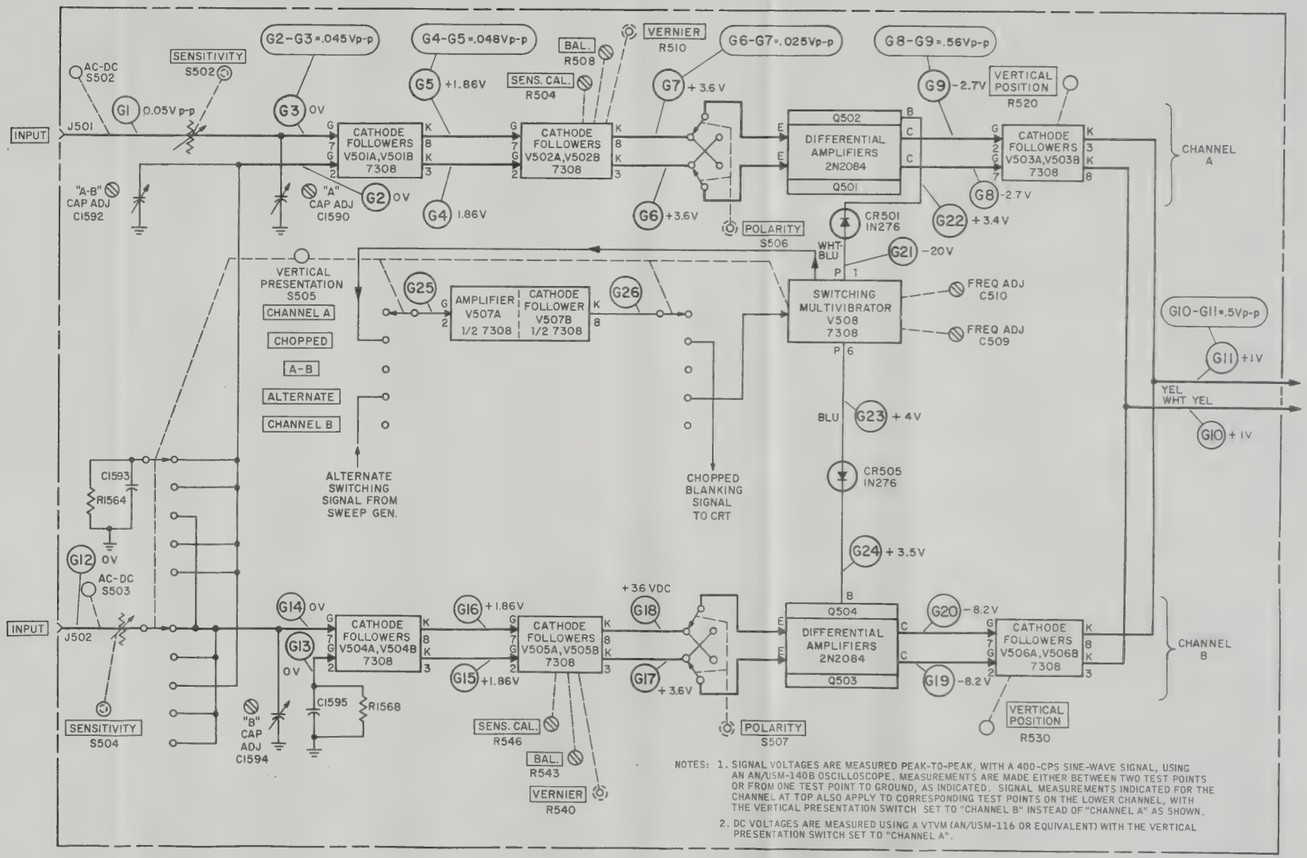

Figure 4-13. Vertical Plug-In Functional and Servicing Block Diagram

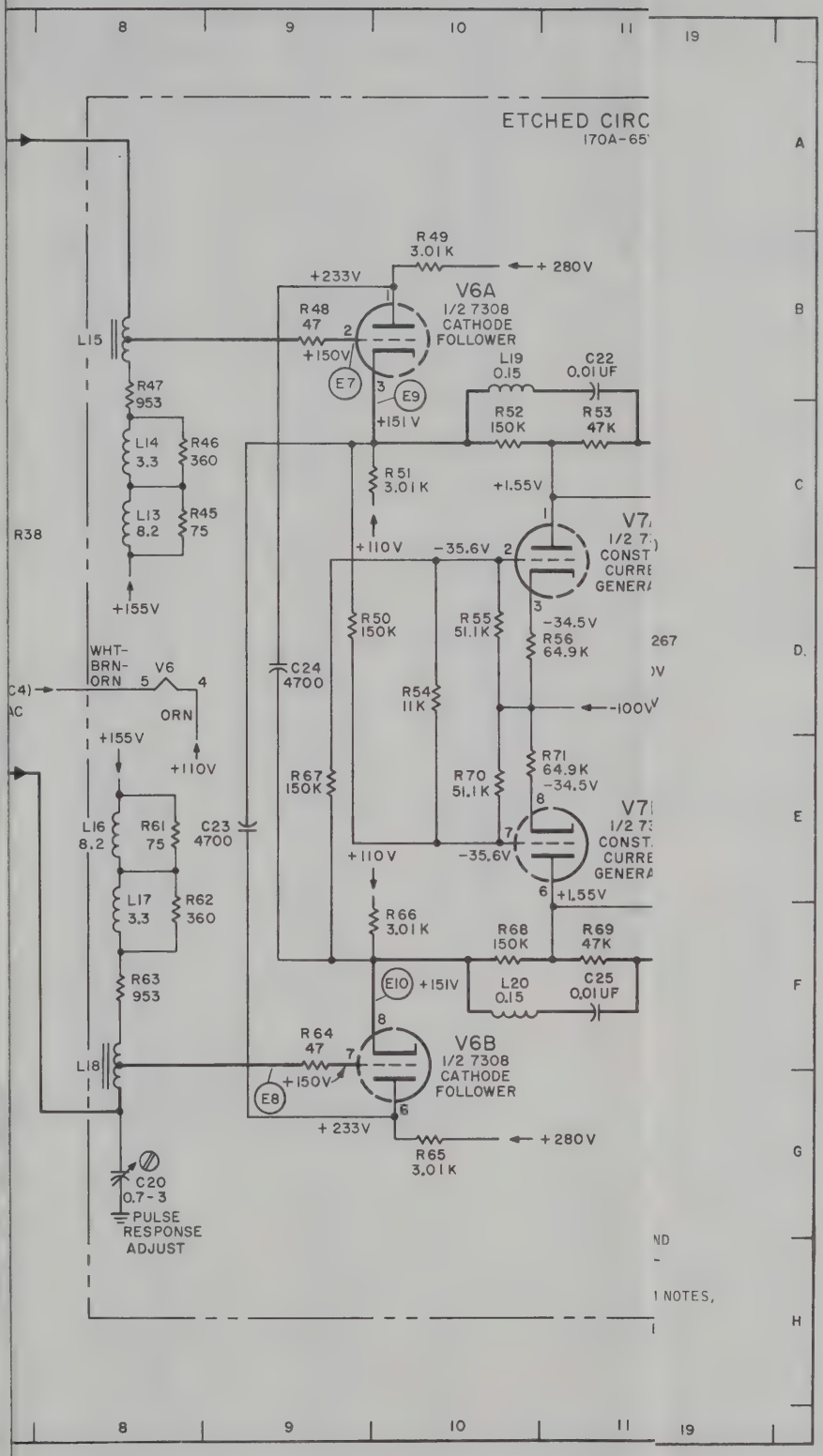
8
9
10
11
19
ETCHED CIRC
170A-65
A
B
C
D
E
F
G
H
R49
3.01K
+ 280V
+233V
V6A
1/2 7308
CATHODE
FOLLOWER
R48
47
+150V
E7
E9
L15
L19
0.15
C22
0.01UF
R52
150K
R53
47K
+151V
R47
953
L14
3.3
R46
360
L13
8.2
R45
75
R38
+155V
R51
3.01K
+1.55V
+110V
-35.6V
V7
1/2 7
CONST
CURRE
GENERA
R50
150K
R55
51.1K
-34.5V
R56
64.9K
WHT-
BRN-
ORN
V6
5
4
ORN
C24
4700
R54
11K
-100V
+155V
+110V
R67
150K
R70
51.1K
R71
64.9K
-34.5V
L16
8.2
R61
75
C23
4700
V7
1/2 7
CONST
CURRE
GENERA
+110V
-35.6V
+1.55V
L17
3.3
R62
360
R66
3.01K
R68
150K
R69
47K
E10
+151V
L20
0.15
C25
0.01UF
R63
953
R64
47
V6B
1/2 7308
CATHODE
FOLLOWER
L18
E8
+150V
+233V
+280V
R65
3.01K
C20
0.7-3
PULSE
RESPONSE
ADJUST
NOTES,

REF. DESIG.	SCHEMATIC LOCATION
A1	A7
A2	A15
A3	B14
	F14
C1	E2
C2	F2
C7	F1
C8	G3
C9	H4
C10	F4
C11	H5
C12	F5
C13	G6
C14	F3
C15	C6
C20	G5
C21	F17
C22	B11
C23	E5
C24	D6
C25	F11
C26	F17
C27	D12
C28	G13
C29	B13
C30	A13
C31	D15
C32	D15
C33	E15
C34	A15
C35	E15
DL1	A7
DL2	E7
J105	H7
L1	B4
L2	D4
L3	B6
L4	A6
L5	D6
L6	E6
L9	G4
L10	G5
L13	G6
L14	C6
L15	B6
L16	E6
L17	E6
L18	E5
L19	B10
L20	F10
L21	B15
L22	G16
R1	A5
R2	B2
R3	B2
R4	D2
R5	B3
R6	C3
R7	E2
R8	B4
R9	C4
R11	A5
R12	C5

REF. DESIG.	SCHEMATIC LOCATION
R13	C5
R14	C5
R16	D6
R18	F2
R19	G1
R20	G2
R21	G3
R22	G3
R23	H3
R24	F3
R25	F4
R26	G4
R27	H5
R28	F5
R29	F5
R30	G5
R31	H6
R32	G6
R36	F2
R37	E2
R38	E17
R39	B6
R40	E2
R41	B6
R45	C8
R46	C8
R47	B8
R48	B9
R49	B10
R50	D10
R51	C10
R52	C10
R53	C11
R54	D10
R55	D10
R56	D11
R61	E8
R62	F8
R63	F8
R64	F9
R65	G10
R66	F10
R67	E9
R68	F10
R69	F11
R70	E10
R71	E11
R75	G13
R76	F13
R77	B12
R78	C12
R79	C12
R80	D14
R81	B13
R82	B13
R83	F12
R84	E12
R85	E12
R86	E14
R87	D17
R88	D18
R89	A16
R90	B16

REF. DESIG.	SCHEMATIC LOCATION
R91	C16
R92	G15
R93	G16
R94	F18
R95	E17
R96	E17
R97	A17
R98	A17
R99	D17
R310	D18
S1	C17
V1A	A3
V1B	D3
V2A	B6
V2B	B4
V3A	D6
V3B	D6
V4A	G4
V4B	F3
V5A	F6
V5B	G5
V6A	B10
V6B	F10
V7A	C11
V7B	E11
V8	C12
V9	E12
V10A	G13
V10B	A13
V11A	C14
V11B	F14
V12A	B16
V12B	C16
V13A	F16
V13B	E16
W1	G7
W2	G7

Typical DC Voltages in the Vertical Amplifier for the Following Indicated Spot Positions

Test Point	Location	Voltage (Spot 2 cm High) (Spot Center) (Spot 2 cm Low)	Test Point	Location	Voltage (Spot 2 cm High) (Spot Center) (Spot 2 cm Low)
E1	V1(2)	-1.87 -2.07 -2.28	None	V7(6)	+2.4 +1.55 +0.75
E2	V1(7)	-2.28 -2.07 -1.87	E11	V11(7)	+0.75 +1.6 +2.5
E3	V1(3) V2(7)	-0.12 -0.33 -0.55	E12	V11(2)	+2.5 +1.6 +0.75
E4	V1(8) V3(7)	-0.55 -0.33 -0.12	E13	V11(6)	+94.5 +94.3 +94.1
None	V2(6)	+71.6 +71.8 +72	E14	V11(1)	+94.1 +94.3 +94.5
None	V3(6)	+72 +71.8 +71.6	None	V11(8)	+2.5 +3.3 +4.0
E5	V2(1) V6(2)	+149 +150 +151	None	V11(3)	+4.0 +3.3 +2.5
E6	V3(1) V6(7)	+151 +150 +149	E15	V12(1)	+187 +181 +175
E9	V6(3)	+150 +151 +152	E16	V13(1)	+175 +181 +187
E10	V6(8)	+152 +151 +150	E18	V10(8)	+3.1 +4.0 +4.8
None	V7(1)	+0.75 +1.55 +2.4	E19	V10(3)	+4.8 +4.0 +3.1

Conditions of Measurement: Spot set to the three positions using the VERTICAL POSITION control. The voltages shown on the schematic correspond to spot center.

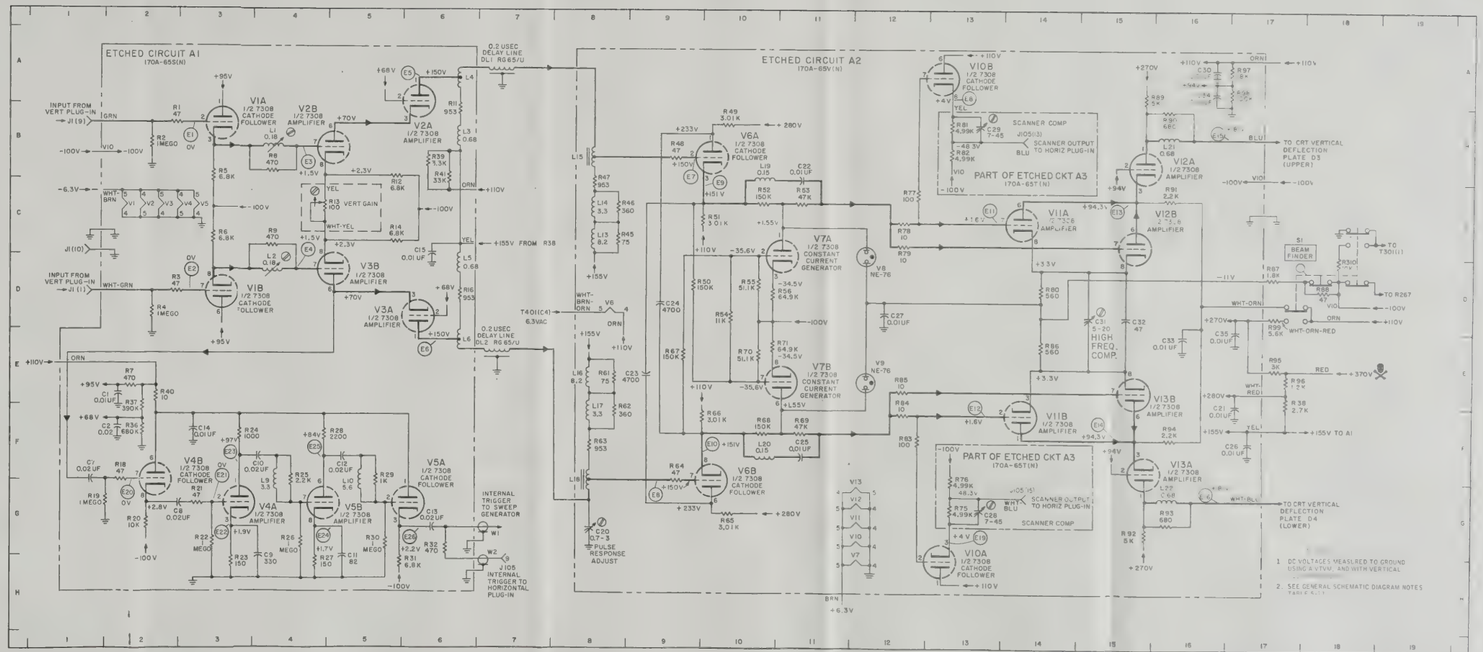
ETCHED CIRCUIT A1
170A-655(N)
ETCHED CIRCUIT A2
170A-659(N)
V1A 1/2 7308 CATHODE FOLLOWER
V2B 1/2 7308 AMPLIFIER
V2A 1/2 7308 AMPLIFIER
V1B 1/2 7308 CATHODE FOLLOWER
V3B 1/2 7308 AMPLIFIER
V3A 1/2 7308 AMPLIFIER
V4B 1/2 7308 CATHODE FOLLOWER
V4A 1/2 7308 AMPLIFIER
V5B 1/2 7308 AMPLIFIER
V5A 1/2 7308 CATHODE FOLLOWER
V6A 1/2 7308 CATHODE FOLLOWER
V6B 1/2 7308 CATHODE FOLLOWER
V7A 1/2 7308 CONSTANT CURRENT GENERATOR
V7B 1/2 7308 CONSTANT CURRENT GENERATOR
V8 NE-76
V9 NE-76
V10B 1/2 7308 CATHODE FOLLOWER
V10A 1/2 7308 CATHODE FOLLOWER
V11A 1/2 7308 AMPLIFIER
V11B 1/2 7308 AMPLIFIER
V12B 1/2 7308 AMPLIFIER
V12A 1/2 7308 AMPLIFIER
V13B 1/2 7308 AMPLIFIER
V13A 1/2 7308 AMPLIFIER
INPUT FROM VERT PLUG-IN J1 (9)
INPUT FROM VERT PLUG-IN J1 (1)
0.2 USEC DELAY LINE DL1 RG 65/U
0.2 USEC DELAY LINE DL2 RG 65/U
T401(C4) 6.3VAC
INTERNAL TRIGGER TO SWEEP GENERATOR
J105 INTERNAL TRIGGER TO HORIZONTAL PLUG-IN
C20 0.7-3 PULSE RESPONSE ADJUST
SCANNER COMP J105(13)
SCANNER OUTPUT TO HORIZ PLUG-IN J105(3)
SCANNER O-TPUT TO HORIZ PLUG-IN J105(9)
PART OF ETCHED CKT A3 170A-657(N)
PART OF ETCHED CKT A3 170A-657(N)
HIGH FREQ. COMP.
BEAM FINDER
TO CRT VERTICAL DEFLECTION PLATE D3 (UPPER)
TO CRT VERTICAL DEFLECTION PLATE D4 (LOWER)
+155V FROM R38
+155V TO A1
TO R267
TO T301(1)
1 DC VOLTAGES MEASURED TO GROUND USING A VTVM AND WITH VERTICAL
2 SEE GENERAL SCHEMATIC DIAGRAM NOTES TABLE A(1)

Figure 5-37. Main Vertical Amplifier Schematic Diagram

Figure
5-37A

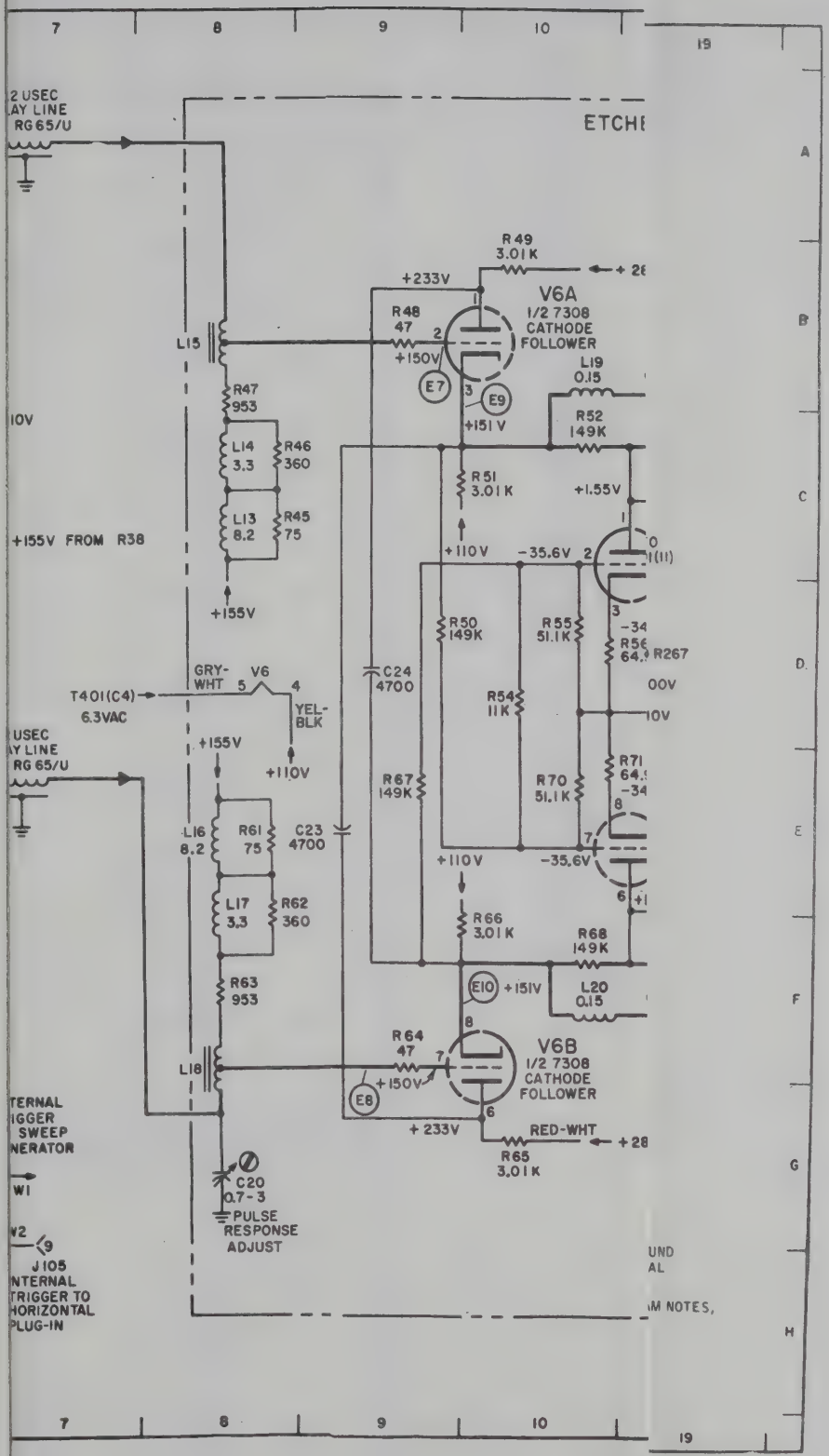
ETCHE
R49
3.01K
+233V
V6A
1/2 7308
CATHODE
FOLLOWER
R48
47
+150V
E7
E9
+151V
L19
0.15
R52
149K
L15
R47
953
L14
3.3
R46
360
L13
8.2
R45
75
+155V FROM R38
+155V
R51
3.01K
+1.55V
+110V
-35.6V
R50
149K
R55
51.1K
R54
11K
R67
149K
R70
51.1K
C24
4700
T401(C4)
6.3VAC
GRY-WHT
YEL-BLK
V6
+155V
+110V
L16
8.2
R61
75
C23
4700
L17
3.3
R62
360
R63
953
R66
3.01K
R68
149K
E10
+151V
L20
0.15
L18
R64
47
+150V
E8
V6B
1/2 7308
CATHODE
FOLLOWER
+233V
RED-WHT
R65
3.01K
C20
0.7-3
PULSE
RESPONSE
ADJUST
J105
INTERNAL
TRIGGER TO
HORIZONTAL
PLUG-IN

REF. DESIG.	SCHEMATIC LOCATION
A1	A7
A2	A15
A3	B14
	F14
C1	E2
C2	F2
C7	F1
C8	G3
C9	H4
C10	F4
C11	H5
C12	F5
C13	G6
C14	F3
C15	C6
C20	G8
C21	F17
C22	B11
C23	E9
C24	D9
C25	F11
C26	F17
C27	D12
C28	G13
C29	B13
C30	A16
C31	D15
C32	D15
C33	E16
C34	A16
C35	E16
DL1	A7
DL2	E7
J105	H7
L1	B4
L2	D4
L3	B6
L4	A6
L5	D6
L6	E6
L9	G4
L10	G5
L13	C8
L14	C8
L15	B8
L16	E8
L17	F8
L18	F8
L19	B10
L20	F10
L21	B16
L22	G16
R1	A2
R2	B2
R3	D2
R4	D2
R5	B3
R6	C3
R7	E2
R8	B4
R9	C4
R11	A6
R12	C5

REF. DESIG.	SCHEMATIC LOCATION
R13	C5
R14	C5
R16	D6
R16	F2
R19	G1
R20	G2
R21	G3
R22	G3
R23	H3
R24	F3
R25	F4
R26	G4
R27	H5
R28	F5
R29	F5
R30	G5
R31	H6
R32	G6
R36	F2
R37	E2
R38	E17
R39	B6
R40	E2
R41	B6
R45	C8
R46	C8
R47	B8
R48	B9
R49	B10
R50	D10
R51	C10
R52	C10
R53	C11
R54	D10
R55	D10
R56	D11
R61	E8
R62	F8
R63	F8
R64	F9
R65	G10
R66	F10
R67	E9
R68	F10
R69	F11
R70	E10
R71	E11
R75	G13
R76	F13
R77	B12
R78	C12
R79	C12
R80	D14
R81	B13
R82	B13
R83	F12
R84	E12
R85	E12
R86	E14
R87	D17
R88	D18
R89	A16
R90	B16

REF. DESIG.	SCHEMATIC LOCATION
R91	C16
R92	G15
R93	G16
R94	F16
R95	E17
R96	E17
R97	A17
R98	A17
R99	D17
R310	D18
S1	C17
V1A	A3
V1B	D3
V2A	B6
V2B	B4
V3A	D5
V3B	D5
V4A	G4
V4B	F3
V5A	F6
V5B	G5
V6A	B10
V6B	F10
V7A	C11
V7B	E11
V8	C12
V9	E12
V10A	G13
V10B	A13
V11A	C14
V11B	F14
V12A	B16
V12B	C16
V13A	F16
V13B	E16
W1	G7
W2	G7

Typical DC Voltages in the Vertical Amplifier for the Following Indicated Spot Positions

Test Point	Location	Voltage (Spot 2 cm High) (Spot 2 cm Low)	Test Point	Location	Voltage (Spot 2 cm High) (Spot 2 cm Low)
E1	V1(2)	-1.87 -2.07	None	V7(6)	+2.4 +1.55
		-2.28			+0.75
E2	V1(7)	-2.28 -2.07	E11	V11(7)	+0.75 +1.6
		-1.87			+2.5
E3	V1(3) V2(7)	-0.12 -0.33	E12	V11(2)	+2.5 +1.6
		-0.55			+0.75
E4	V1(8) V3(7)	-0.55 -0.33	E13	V11(6)	+94.5 +94.3
		-0.12			+94.1
None	V2(6)	+71.6 +71.8	E14	V11(1)	+94.1 +94.3
		+72			+94.5
None	V3(6)	+72 +71.8	None	V11(8)	+2.5 +3.3
		+71.6			+4.0
E5	V2(1) V6(2)	+149 +150	None	V11(3)	+4.0 +3.3
		+151			+2.5
E6	V3(1) V6(7)	+151 +150	E15	V12(1)	+187 +181
		+149			+175
E9	V6(3)	+150 +151	E16	V13(1)	+175 +181
		+152			+187
E10	V6(8)	+152 +151	E18	V10(8)	+3.1 +4.0
		+150			+4.8
None	V7(1)	-0.75 -1.55	E19	V10(3)	+4.8 +4.0
		+2.4			+3.1

Conditions of Measurement: Spot set to the three positions using the VERTICAL POSITION control. The voltages shown on the schematic correspond to spot center.

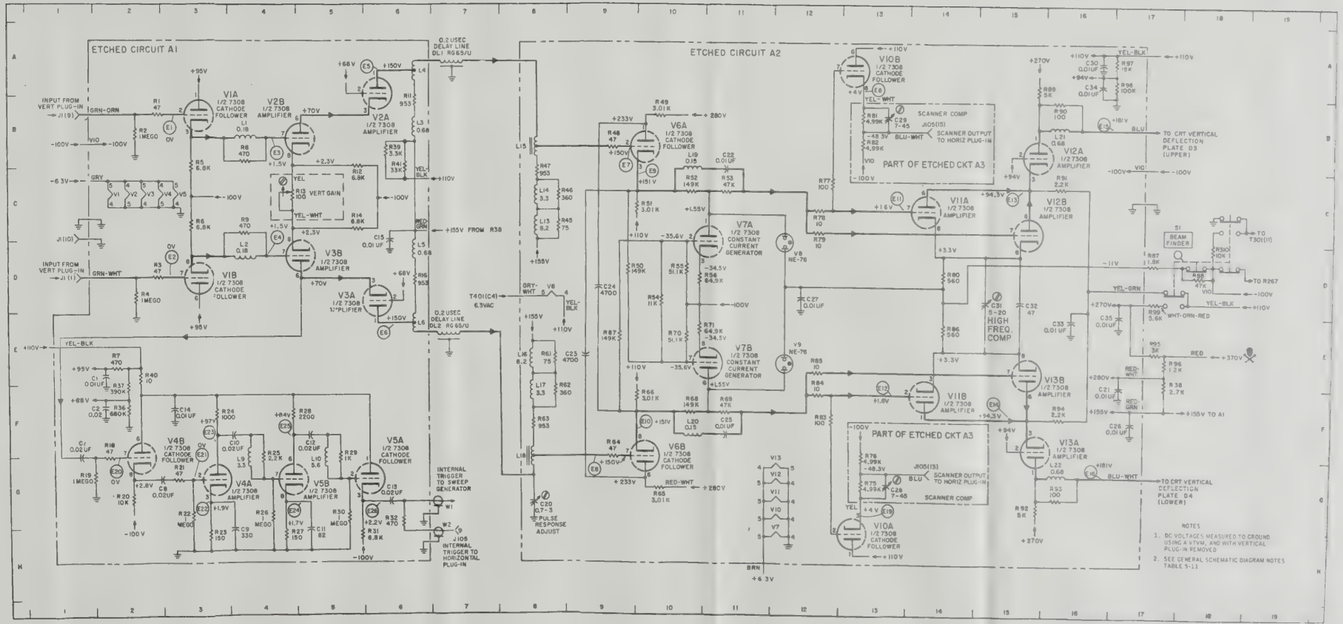
ETCHED CIRCUIT A1
ETCHED CIRCUIT A2
PART OF ETCHED CKT A3
V1A 1/2 7308 CATHODE FOLLOWER
V2B 1/2 7308 AMPLIFIER
V2A 1/2 7308 AMPLIFIER
V3B 1/2 7308 AMPLIFIER
V3A 1/2 7308 AMPLIFIER
V4B 1/2 7308 CATHODE FOLLOWER
V4A 1/2 7308 AMPLIFIER
V5B 1/2 7308 AMPLIFIER
V5A 1/2 7308 CATHODE FOLLOWER
V6A 1/2 7308 CATHODE FOLLOWER
V6B 1/2 7308 CATHODE FOLLOWER
V7A 1/2 7308 CONSTANT CURRENT GENERATOR
V7B 1/2 7308 CONSTANT CURRENT GENERATOR
V8 NE-76
V9 NE-76
V10A 1/2 7308 CATHODE FOLLOWER
V10B 1/2 7308 CATHODE FOLLOWER
V11A 1/2 7308 AMPLIFIER
V11B 1/2 7308 AMPLIFIER
V12A 1/2 7308 AMPLIFIER
V12B 1/2 7308 AMPLIFIER
V13A 1/2 7308 AMPLIFIER
V13B 1/2 7308 AMPLIFIER
0.2 USEC DELAY LINE DL1 RG65/U
0.2 USEC DELAY LINE DL2 RG65/U
6.9 NAC
INPUT FROM VERT PLUG-IN J1(9)
INPUT FROM VERT PLUG-IN J1(1)
J1(10)
R13 100 VERT GAIN
C19 5-20 HIGH FREQ COMP
INTERNAL TRIGGER TO SWEEP GENERATOR
INTERNAL TRIGGER TO HORIZONTAL PLUG-IN
C20 0.7-3 PULSE RESPONSE ADJUST
SCANNER COMP
SCANNER OUTPUT TO HORIZ PLUG-IN
TO CRT VERTICAL DEFLECTION PLATE D3 (UPPER)
TO CRT VERTICAL DEFLECTION PLATE D4 (LOWER)
BEAM FINDER
TO T301(11)
TO R267
+155V TO A1
+155V FROM R38
NOTES
1. DC VOLTAGES MEASURED TO GROUND USING A VTVM, AND WITH VERTICAL PLUG-IN REMOVED
2. SEE GENERAL SCHEMATIC DIAGRAM NOTES TABLE 5-1

Figure 5-37A. Main Vertical Amplifier Schematic Diagram, AN/USM-140C

Figure
5-38

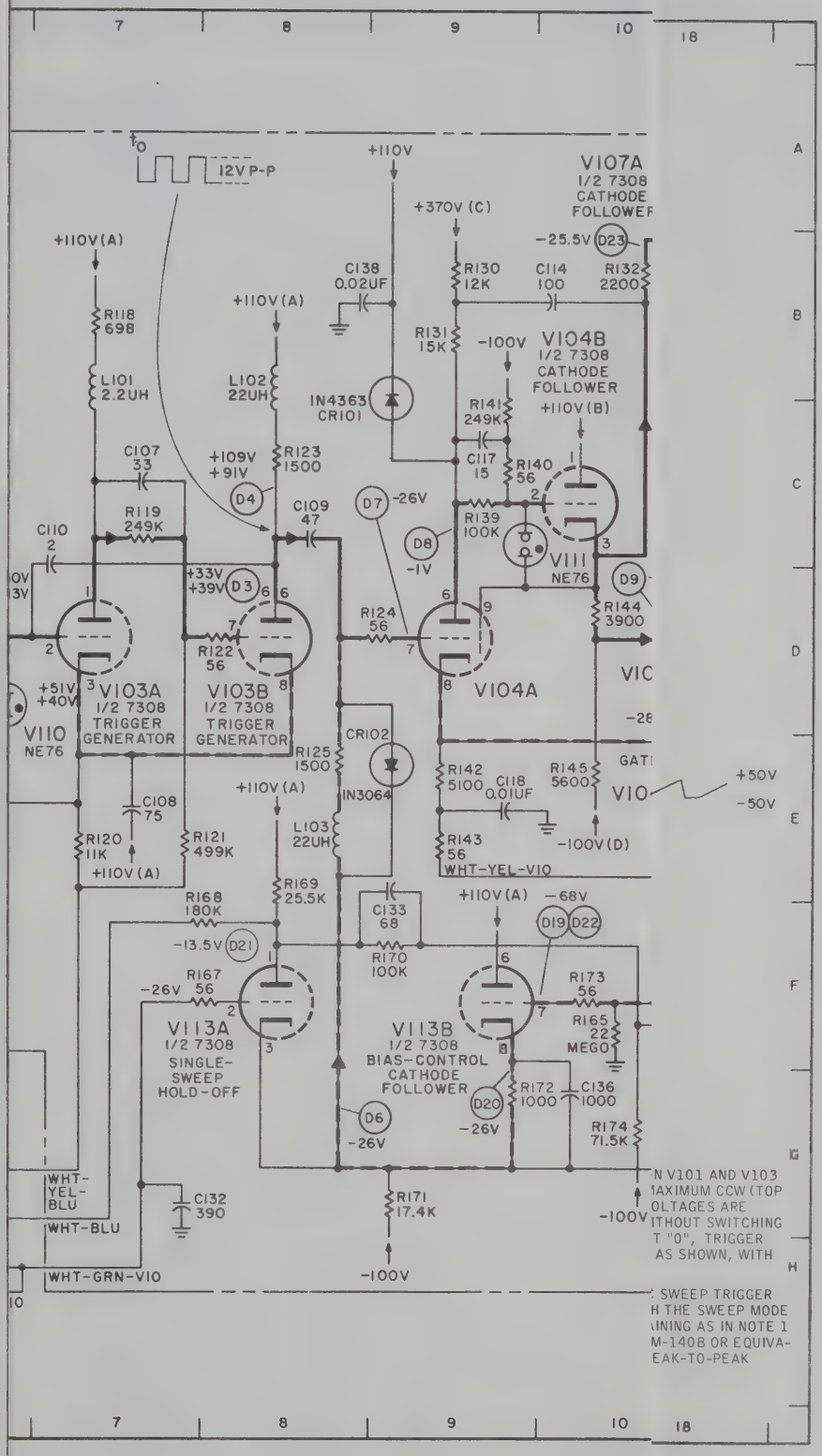
12VP-P
+110V
V107A
1/2 7308
CATHODE
FOLLOWER
+370V (C)
-25.5V D23
+110V(A)
C138
0.02UF
R130
12K
C114
100
R132
2200
R118
698
+110V(A)
R131
15K
-100V
V104B
1/2 7308
CATHODE
FOLLOWER
L101
2.2UH
L102
22UH
IN4363
CR101
R141
249K
+110V(B)
C107
33
+109V
+91V
R123
1500
C117
15
R140
56
D4
C109
47
D7 -26V
C110
2
R119
249K
R139
100K
D8
-1V
V111
NE76
D9
+33V
+39V D3
R144
3900
R124
56
R122
56
V103A
1/2 7308
TRIGGER
GENERATOR
V103B
1/2 7308
TRIGGER
GENERATOR
V104A
+51V
+40V
V110
NE76
CR102
R125
1500
R142
5100
C118
0.01UF
R145
5600
+50V
-50V
IN3064
+110V(A)
C108
75
L103
22UH
R143
56
-100V(D)
R120
11K
R121
499K
+110V(A)
WHT-YEL-V10
R169
25.5K
R168
180K
C133
68
+110V(A)
-68V
D19 D22
-13.5V D21
R170
100K
R167
56
-26V
R173
56
V113A
1/2 7308
SINGLE-
SWEEP
HOLD-OFF
V113B
1/2 7308
BIAS-CONTROL
CATHODE
FOLLOWER
R165
22
MEGO
R172
1000
C136
1000
D20
-26V
D6
-26V
R174
71.5K
WHT-
YEL-
BLU
C132
390
R171
17.4K
-100V
WHT-BLU
WHT-GRN-V10
-100V
N V101 AND V103
AXIMUM CCW (TOP
OLTAGES ARE
ITHOUT SWITCHING
T "0", TRIGGER
AS SHOWN, WITH
SWEEP TRIGGER
H THE SWEEP MODE
INING AS IN NOTE 1
M-140B OR EQUIVA-
EAK-TO-PEAK

REF. DESIG.	SCHEMATIC LOCATION
A101	A9
CR101	C8
CR102	E8
CR103	C12
CR104	C12
C101	D2
C102	E2
C103	D3
C104	F3
C105	E4
C106	C6
C107	C5
C108	F7
C109	C8
C114	B10
C116	B11
C117	C6
C118	E9
C119	D11
C121	B14
C122	C13
C123	D16
C124	C14
C130	G6
C132	G6
C133	F9
C134	E14
C135	E16
C136	G10
C137	B8
C138	B8
C139	B8
C140	C3
C141	C3
C142	C2
C143	F13
J101	D1
J102	A12
J104	F17
J105	E1
L101	B7
L102	B8
L103	B8
R10	F5
R18	E15
R19	C2
R102	F1
R103	D3
R104	D5
R105	E5
R106	F4
R107	F4
R108	F4
R109	C5
R110	C5
R111	B6
R112	C5
R113	B6
R114	B6
R115	F1
R116	F6
R117	F6
R118	B6

REF. DESIG.	SCHEMATIC LOCATION
R119	C7
R120	E7
R121	E8
R122	D8
R123	C8
R124	D9
R125	E8
R130	B9
R131	B9
R132	B10
R133	F12
R135	B11
R136	B11
R137	B11
R138	C12
R139	C9
R140	C9
R141	C9
R142	E9
R143	E9
R144	D10
R145	E10
R146	C11
R147	C11
R148	C11
R149	E11
R150	D12
R151	C14
R152	A14
R153	C15
R154	D14
R155	D16
R156	D16
R157	D16
R158	C14
R159	B15
R160	A15
R161	G4
R162	G3
R163	H4
R164	H3
R165	F10
R167	F8
R168	E8
R169	E8
R170	F9
R171	G9
R172	G9
R173	F10
R174	G10
R175	F13
R176	E14
R177	F14
R178	G14
R179	F15
R181	F16
R182	F16
R186	B2
R187	B2
R188	C2
R189	C2
S101	E3
S102	E3

REF. DESIG.	SCHEMATIC LOCATION
S103	G5
S202	E11
V101A	C4
V101B	F4
V102	D5
V103A	D7
V103B	D8
V104A	D9
V104B	B10
V105A	D10
V105B	D13
V107A	A10
V107B	B12
V109	A3
V110	E7
V111	D10
V113A	F7
V113B	F9
V114A	E13
V114B	F16
V115	B4
V116	E16

Supplementary Troubleshooting Voltages for
Non-Operating Sweep

NOTE: Voltages measured by disconnecting R124 from TP D7 and with a clip lead alternately connecting R124 to -100 volts (from any violet lead) and then momentarily to ground; voltage measured for each state with the voltage measured in the grounded condition listed first.

Test Point	Location	Voltage (R124 grounded) (R124 at -100V)
D6	R171	-38. -5.3
D7	V104(7)	-0.36 v -100. v
D8	V104(6)	+8. +110.
None	V104(2)	-22.9 +50.6
D9	V105(2)	-51. -17.
D10	V105(3)	-1.8 -17.
D11	V105(1)	-4.2 -6.5
D12	R151	-4.6 -7.
D13	V109(6)	+68.5 +332.
R157 junction with WHT-ORN lead		+95. +36.
D14	R155	-58. +83.
D15	V115(8)	-51. +85.

Test Point	Location	Voltage (R124 grounded) (R124 at -100V)
D16	V105(7)	-51 -52.
D17	R175	-75. -8.4
D18	V114(8)	-66. -3.
D19	V113(7)	-66. -3.
D20	V113(8)	-38. -0.04
D21	V113(1)	-7. -82.
D22	see D19	
D23	V107(2)	-20. +51.
D24	V107(3)	-16. -52.
D25	V107(7)	-15. +50.
D26	V107(8)	0 +53.
D27	V114(2)	-51. +80.
D28	V114(3)	-46. +81.

Waveforms for Test Points Indicated

Figure 5-38

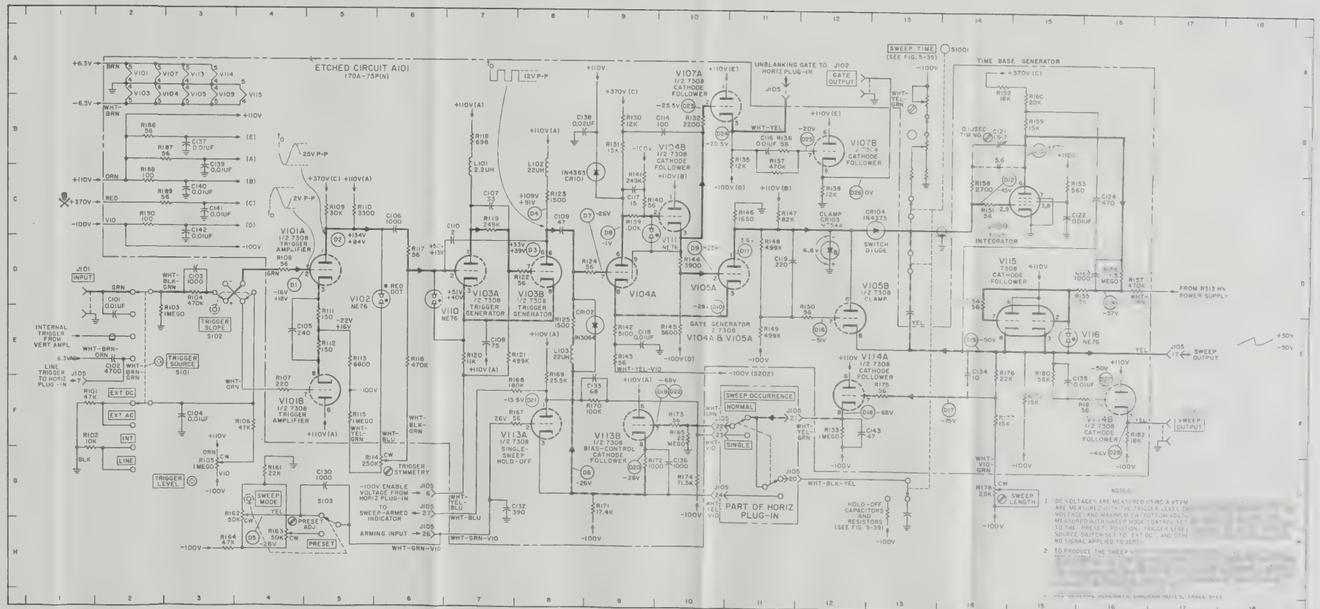

Figure 5-38. Sweep Generator Schematic Diagram

Figure
5-38A

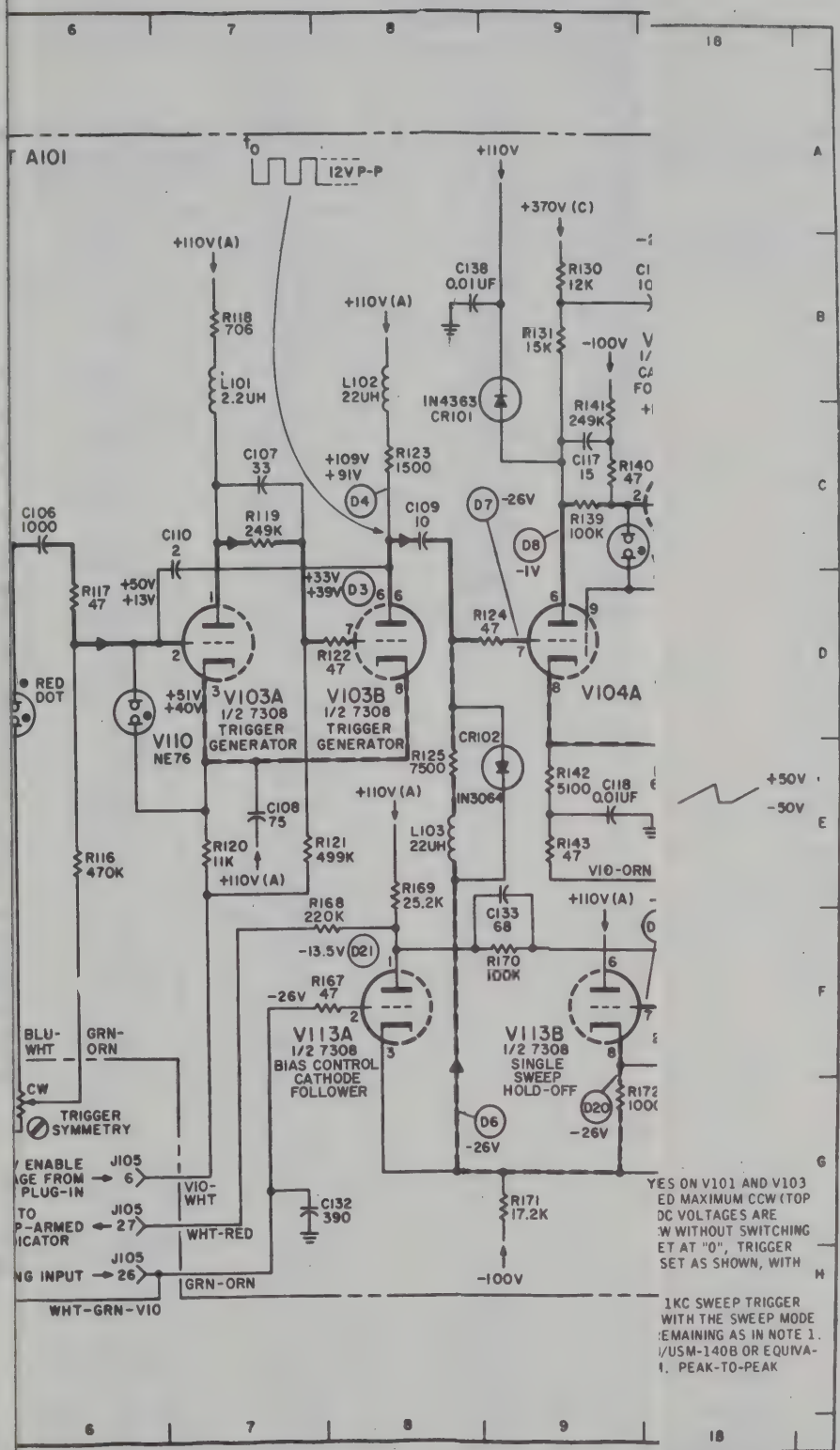
A101
12V P-P
+110V
+370V (C)
+110V(A)
C138 0.01UF
R130 12K
R118 706
L101 2.2UH
L102 22UH
IN4363 CR101
R131 15K
-100V
R141 249K
C107 33
+109V +91V
R123 1500
C117 15
R140 47
D4
D7 -26V
C109 10
C106 1000
R119 249K
C110 2
R139 100K
D8 -1V
R117 47
+50V +13V
+33V +39V
D3
R124 47
R122 47
RED DOT
+51V +40V
V103A 1/2 7308 TRIGGER GENERATOR
V103B 1/2 7308 TRIGGER GENERATOR
V104A
V110 NE76
CR102
IN3064
R125 7500
R142 5100
C118 0.01UF
+50V
-50V
C108 75
R120 11K
R121 499K
+110V(A)
L103 22UH
R143 47
V10-ORN
R116 470K
R169 25.2K
R168 220K
C133 68
-13.5V
D21
R170 100K
R167 47
-26V
V113A 1/2 7308 BIAS CONTROL CATHODE FOLLOWER
V113B 1/2 7308 SINGLE SWEEP HOLD-OFF
BLU-WHT
GRN-ORN
CW
TRIGGER SYMMETRY
D20
D6
-26V
ENABLE
GE FROM
PLUG-IN
J105 6
VIO-WHT
TO
P-ARMED
ICATOR
J105 27
WHT-RED
C132 390
R171 17.2K
NG INPUT
J105 26
GRN-ORN
-100V
WHT-GRN-VIO
YES ON V101 AND V103
ED MAXIMUM CCW (TOP
DC VOLTAGES ARE
W WITHOUT SWITCHING
ET AT "0", TRIGGER
SET AS SHOWN, WITH
1KC SWEEP TRIGGER
WITH THE SWEEP MODE
EMAINING AS IN NOTE 1.
/USM-140B OR EQUIVA-
. PEAK-TO-PEAK

REF. DESIG.	SCHEMATIC LOCATION
A101	A9
CR101	C8
CR102	E8
CR103	C12
CR104	C12
C101	D2
C102	E2
C103	D3
C104	F3
C105	E4
C106	C6
C107	C7
C108	F7
C109	C8
C114	B10
C116	B11
C117	C9
C118	E9
C119	D11
C121	B14
C122	C15
C123	D16
C124	C16
C130	G5
C132	G8
C133	F9
C134	E14
C135	E16
C136	G10
C137	B3
C138	B8
C139	B3
C140	C3
C141	C3
C142	C3
C143	F13
J101	D1
J102	A12
J104	F17
J105	E1
L101	B7
L102	B8
L103	E8
R10	F1
R18	E15
R19	C2
R102	F1
R103	D3
R104	D3
R105	E3
R106	F4
R107	F4
R108	D4
R109	C5
R110	C5
R111	E5
R112	E5
R113	E5
R114	F5
R115	F5
R116	E8
R117	D6
R118	**B7**

REF. DESIG.	SCHEMATIC LOCATION
R119	C7
R120	E7
R121	E8
R122	D6
R123	C8
R124	D9
R125	E8
R130	B9
R131	B9
R132	B10
R133	F12
R135	B11
R136	B11
R137	B11
R138	C12
R139	C9
R140	C9
R141	C9
R142	E9
R143	E9
R144	D10
R145	E10
R146	C11
R147	C11
R148	C11
R149	E11
R150	D12
R151	C14
R152	A14
R153	C15
R154	D14
R155	D16
R156	D16
R157	D16
R158	C14
R159	B15
R160	A15
R161	G4
R162	G3
R163	H4
R164	H3
R165	F10
R167	F8
R168	E8
R169	E8
R170	F9
R171	G9
R172	G9
R173	F10
R174	G10
R175	F13
R176	E14
R177	F14
R178	G14
R179	F15
R181	F16
R182	F16
R186	B2
R187	B2
R188	C2
R189	C2
S101	E3
S102	**E3**

REF. DESIG.	SCHEMATIC LOCATION
S103	G5
S202	E11
V101A	C4
V101B	F4
V102	D5
V103A	D7
V103B	D8
V104A	D9
V104B	B10,
V105A	D10
V105B	D13
V107A	A10
V107B	B12
V109	A3
V110	E7
V111	D10
V113A	F7
V113B	F9
V114A	E13
V114B	F16
V115	B4
V116	E16

Supplementary Troubleshooting Voltages for
Non-Operating Sweep

NOTE: Voltages measured by disconnecting R124 from TP D7 and with a clip lead alternately connecting R124 to -100 volts (from any violet lead) and then momentarily to ground; voltage measured for each state with the voltage measured in the grounded condition listed first.

Test Point	Location	Voltage (R124 grounded) (R124 at -100V)
D6	R171	-38. -5.3
D7	V104(7)	-0.36 v -100. v
D8	V104(6)	+8. +110.
None	V104(2)	-22.9 +50.6
D9	V105(2)	-51. -17.
D10	V105(3)	-1.8 -17.
D11	V105(1)	-4.2 -6.5
D12	R151	-4.6 -7.
D13	V109(6)	+66.5 +332.
R157 junction with WHT-ORN lead		+95. +36.
D14	R155	-58. +83.
D15	V115(8)	-51. +85.

Test Point	Location	Voltage (R124 grounded) (R124 at -100V)
D16	V105(7)	-51 -52.
D17	R175	-75. -8.4
D18	V114(8)	-66. -3.
D19	V113(7)	-66. -3.
D20	V113(8)	-38. -0.04
D21	V113(1)	-7. +82.
D22	see D19	
D23	V107(2)	-20. +51.
D24	V107(3)	-16. +52.
D25	V107(7)	-15. +50.
D26	V107(8)	0 +53.
D27	V114(2)	-51. +80.
D28	V114(3)	-46. +81.

Waveforms for Test Points Indicated

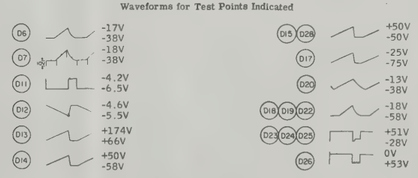

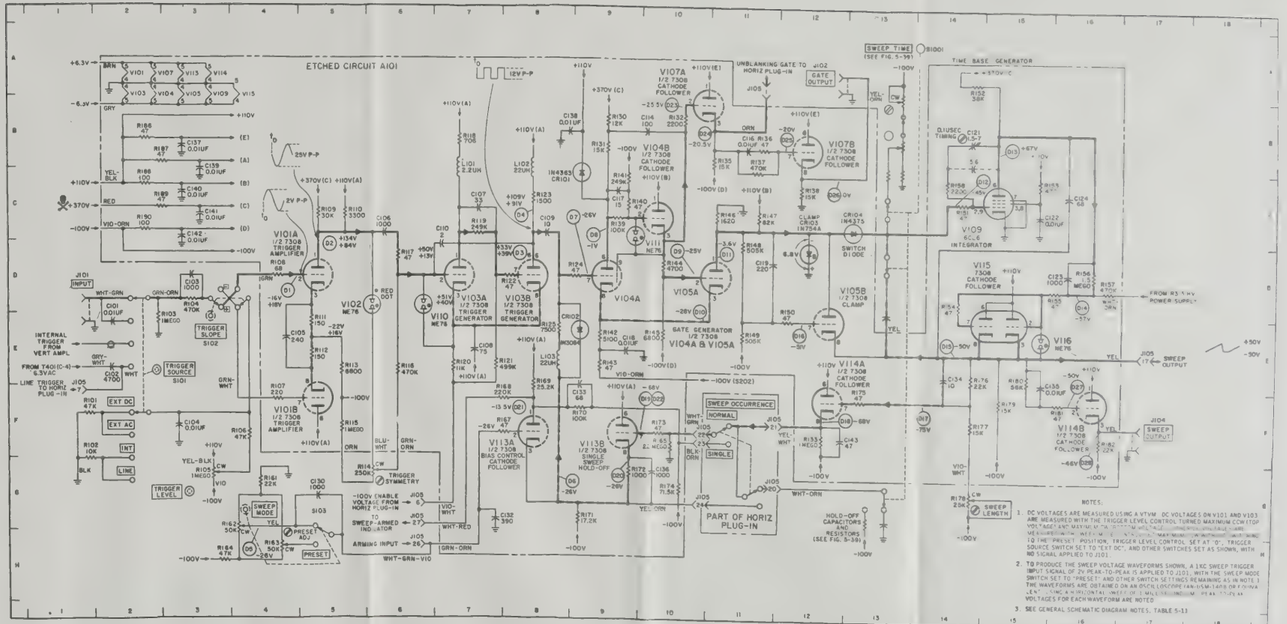
ETCHED CIRCUIT A101
TIME BASE GENERATOR
SWEEP GENERATOR
INTEGRATOR
TRIGGER GENERATOR
BIAS CONTROL CATHODE FOLLOWER
GATE GENERATOR
CATHODE FOLLOWER
CLAMP
SWITCH
SWEEP OCCURRENCE
SINGLE
NORMAL
PART OF HORIZ PLUG-IN
HOLD-OFF CAPACITORS AND RESISTORS (SEE FIG. 5-39)
NOTES:
1. DC VOLTAGES ARE MEASURED USING A VTVM. DC VOLTAGES ON V101 AND V103 ARE MEASURED WITH THE TRIGGER LEVEL CONTROL TURNED MAXIMUM CW (TOP VOLTAGE) AND MAXIMUM CCW (BOTTOM VOLTAGE). ALL OTHER CONTROLS ARE SET FOR NORMAL OPERATION WITH THE SWEEP MODE SWITCH SET TO THE PRESET POSITION. TRIGGER LEVEL CONTROL SET AT "0". TRIGGER SOURCE SWITCH SET TO "EXT DC", AND OTHER SWITCHES SET AS SHOWN, WITH NO SIGNAL APPLIED TO J101.
2. TO PRODUCE THE SWEEP VOLTAGE WAVEFORMS SHOWN, A 1KC SWEEP TRIGGER INPUT SIGNAL OF 2V PEAK-TO-PEAK IS APPLIED TO J101, WITH THE SWEEP MODE SWITCH SET TO "PRESET" AND OTHER SWITCH SETTINGS REMAINING AS IN NOTE 1. THE WAVEFORMS ARE OBTAINED ON AN OSCILLOSCOPE HAVING USM-140B OR EQUIVALENT VERTICAL AMPLIFIER. (WHERE SIMILAR WAVEFORMS ARE SHOWN, ONLY ONE OF THE VOLTAGES FOR EACH WAVEFORM ARE NOTED.)
3. SEE GENERAL SCHEMATIC DIAGRAM NOTES, TABLE 5-11

Figure 5-38A. Sweep Generator Schematic Diagram
AN/USM-140C

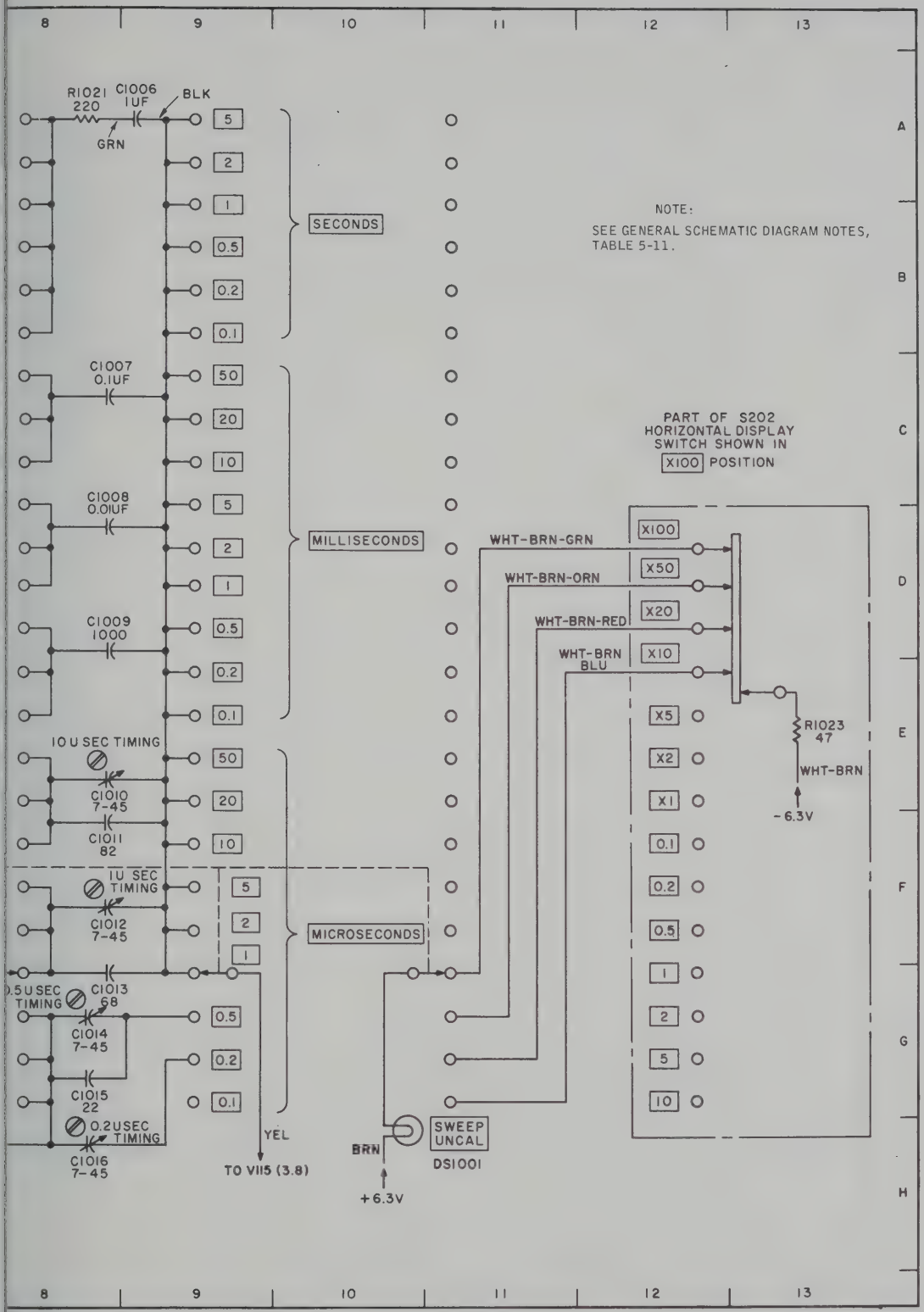

Figure 5-39. Sweep-Time Switch, Functional Schematic Diagram

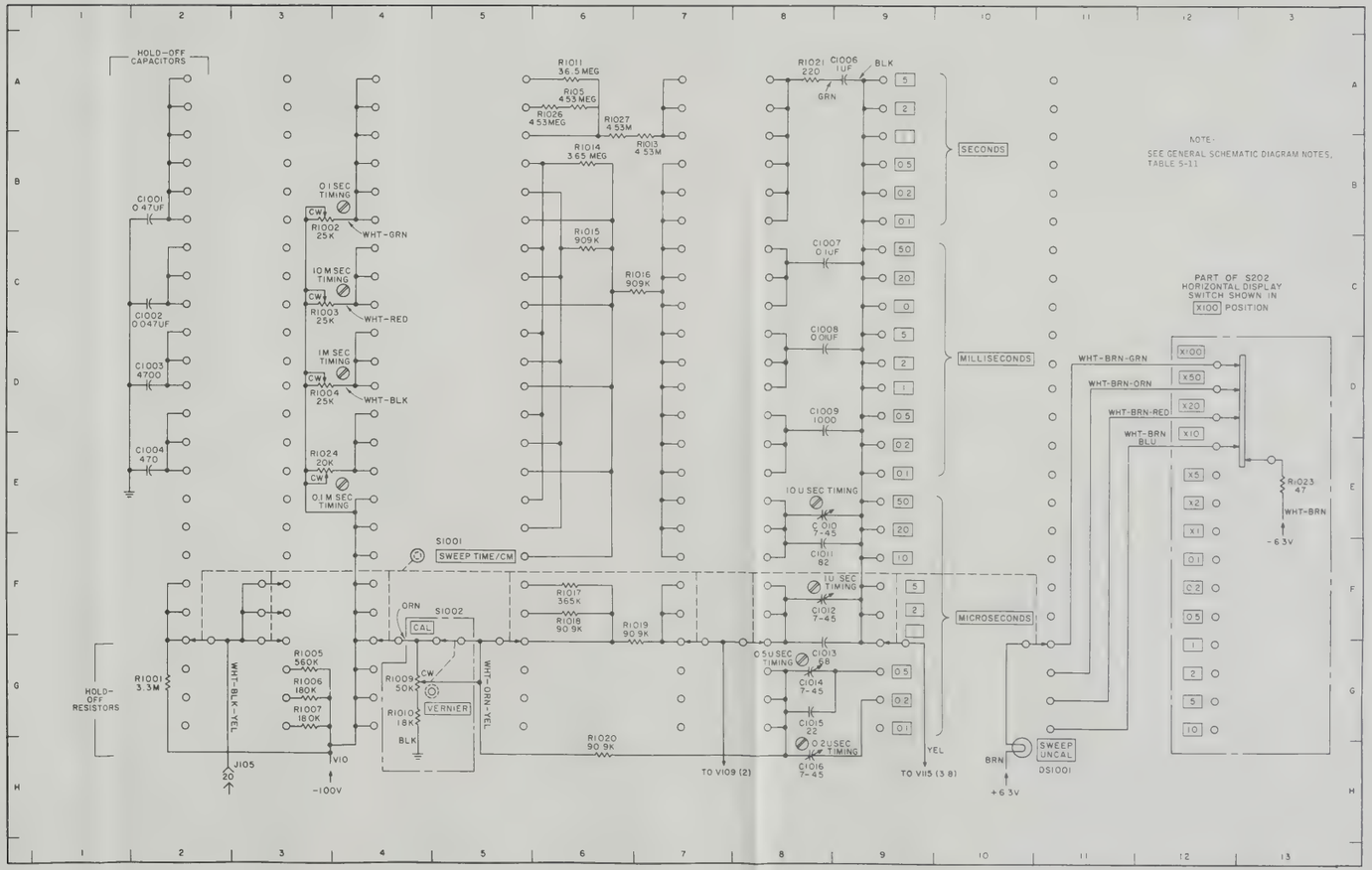

Figure 5-39. Sweep-Time Switch, Functional Schematic Diagram

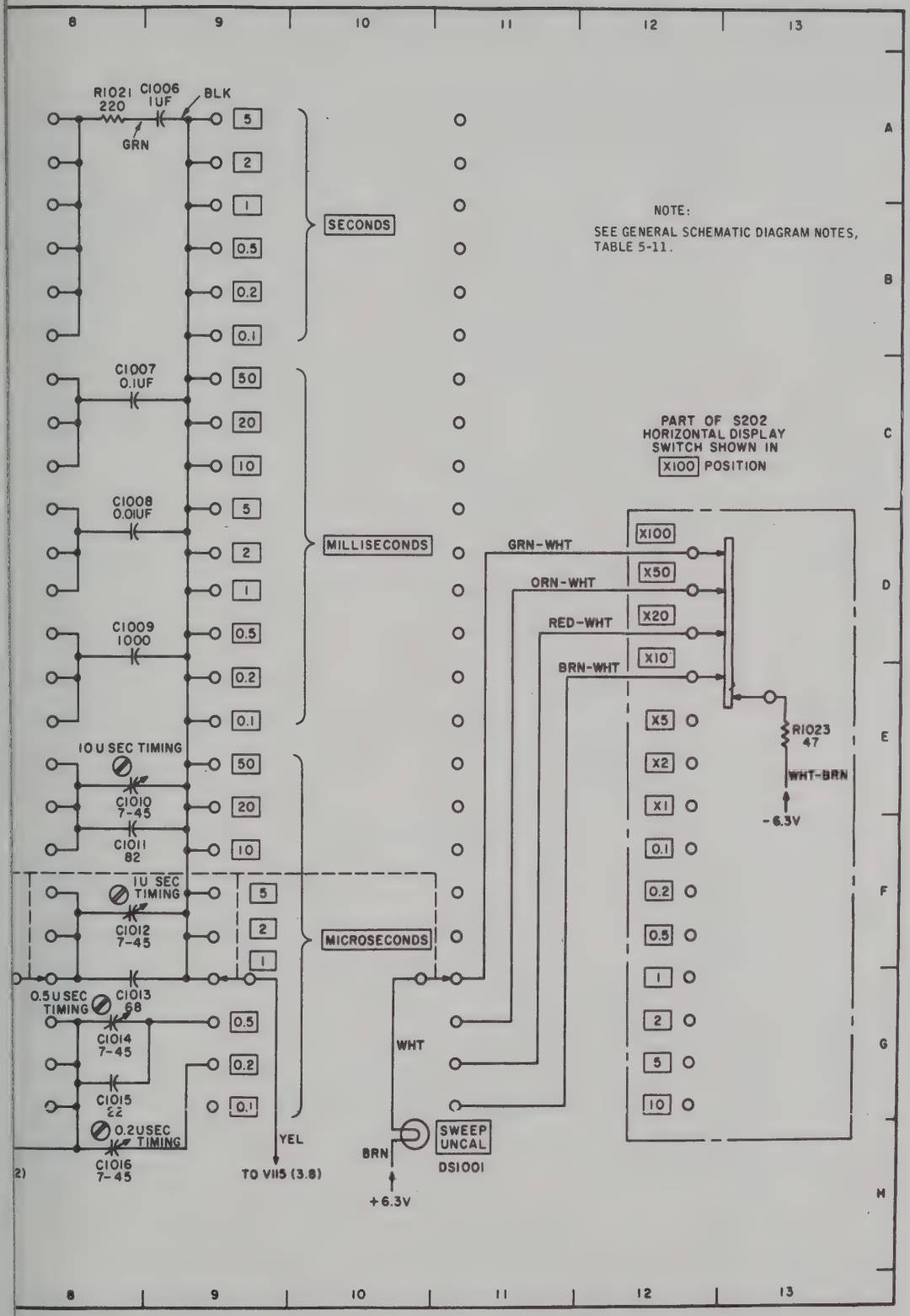

Figure 5-39A. Sweep-Time Switch, Functional Schematic Diagram, AN/USM-140C

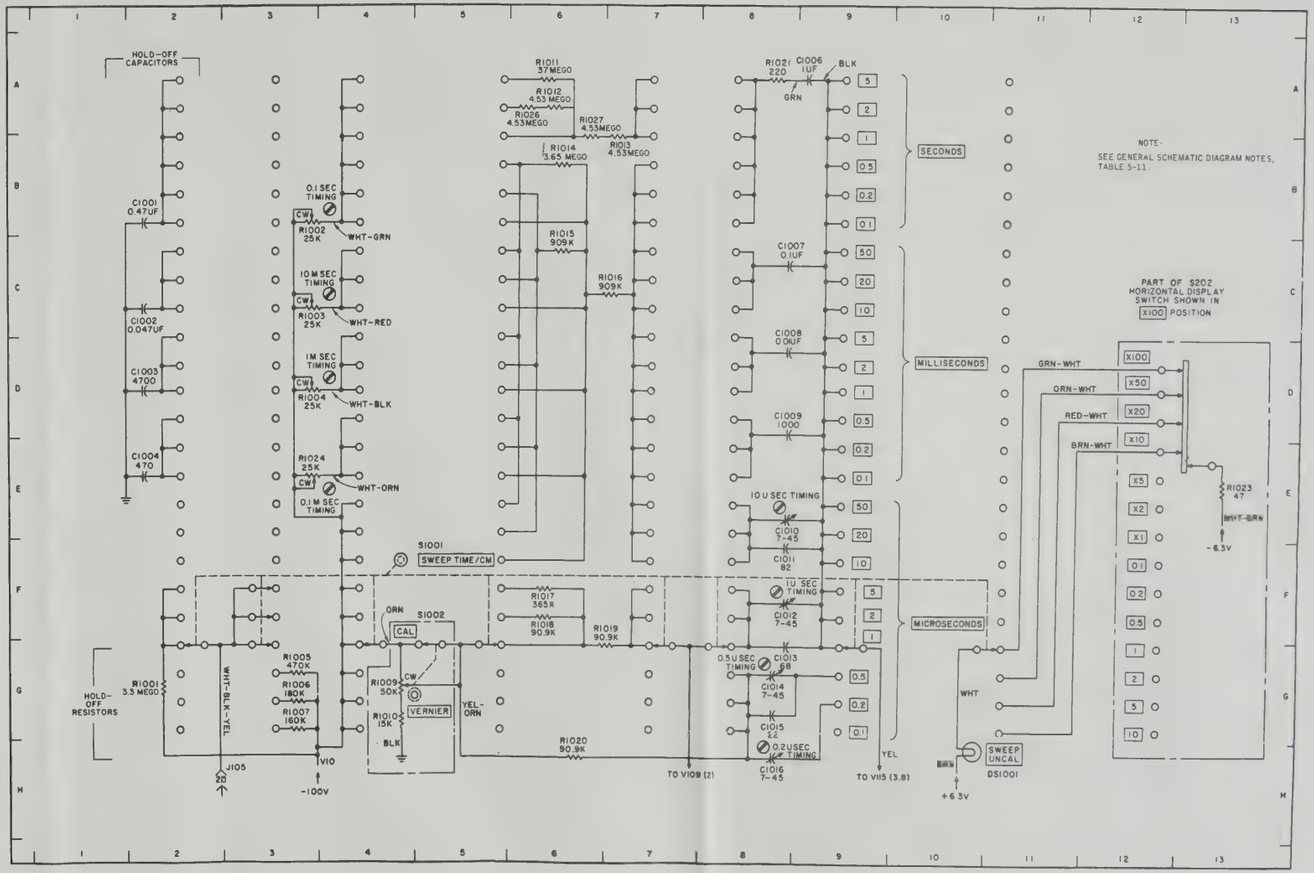

Figure 5-39A. Sweep-Time Switch, Functional Schematic Diagram, AN/USM-140C

Figure
5-41

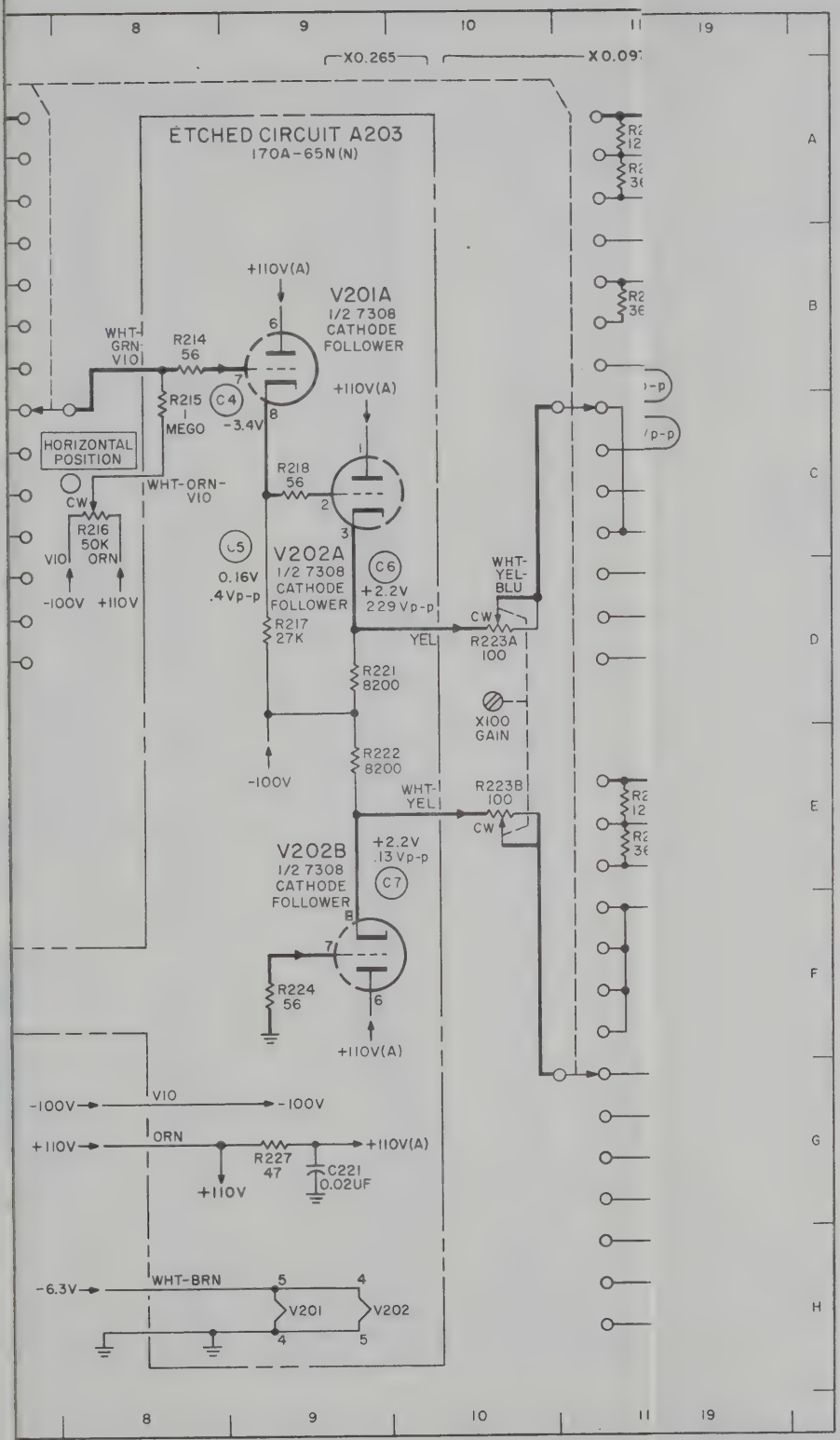
ETCHED CIRCUIT A203
170A-65N(N)
+110V(A)
V201A
1/2 7308
CATHODE
FOLLOWER
WHT-GRN-V10
R214
56
R215
1
MEGO
C4
-3.4V
HORIZONTAL POSITION
CW
R216
50K
ORN
V10
-100V
+110V
WHT-ORN-V10
R218
56
C5
0.16V
.4Vp-p
V202A
1/2 7308
CATHODE
FOLLOWER
C6
+2.2V
229 Vp-p
R217
27K
R221
8200
R222
8200
-100V
WHT-YEL-BLU
R223A
100
YEL
X100
GAIN
WHT-YEL
R223B
100
V202B
1/2 7308
CATHODE
FOLLOWER
+2.2V
.13 Vp-p
C7
R224
56
+110V(A)
-100V
V10
-100V
+110V
ORN
+110V(A)
R227
47
C221
0.02UF
+110V
-6.3V
WHT-BRN
V201
V202
X0.265
X0.09
8
9
10
11
19
A
B
C
D
E
F
G
H

REF. DESIG.	SCHEMATIC LOCATION
A201	A5
A202	B16
A203	A9
C201	B6
C202	C2
C204	B3
C205	B3
C206	C4
C207	C6
C211	B14
C212	B14
C213	G15
C214	G15
C215	E17
C216	D17
C221	G9
C231	C1
C401	B15
C402	G15
C501	C13
C502	F13
F101	B6
F102	B6
F103	B3
F104	B3
F105	B4
F106	C4
F107	C5
F108	D5
F109	E6
F110	E6
F111	E6
F112	C6
F113	C6
F114	B8
F115	C8
F116	C8
F117	D9
F118	C9
F121	D9
F122	E9
F123A	D10
F123B	E10
F124	F9
F127	G9
F133	B12
F134	B11
F135	B12
F136	B12
F137	A11

REF. DESIG.	SCHEMATIC LOCATION
R238	A11
R239	D12
R240	E12
R241	E11
R242	E11
R243	A13
R244	B13
R245	B14
R246	B14
R247	D13
R248	D13
R249	C14
R250	D14
R251	D14
R252	E14
R253	F14
R254	E14
R255	D14
R256	C15
R257	F15
R258	F14
R259	F15
R260	F15
R264	C16
R265	A15
R266	B16
R267	E16
R268	E16
R270	G12
R271	E17
R272	D17
R273	F16
R274	F17
R275	G17
R276	G17
R278	G13
S201	D2
S202	A2
S203	A2
V201A	B9
V201B	D6
V202A	D9
V202B	E9
V203A	C14
V203B	F14
V204	C15
V205	F15
V206A	B17
V206B	G16
V207	C17

Typical DC Voltages in the Horizontal Amplifier
for the Following Indicated Spot Positions

Test Point	Location	Voltage vs Spot Location 2 cm Left	Center	2 cm Right
C4	V201(7)	-3.3	-3.1	-2.9
C5	V202(2)	0.058	-0.16	0.37
C6	V202(3)	+2.1	+2.2	+2.3
C7	V202(8)	+2.3	+2.2	+2.1
C8	Q201(E)	+2.1	+2.2	+2.3
C9	Q202(E)	+2.3	+2.2	+2.1
C10	Q201(B), Q202(B)	+1.9	+2.0	+2.1
C11	Q201(C)	+14.8	+13.8	+12.8
C12	Q202(C)	+12.8	+13.8	+14.8
C13	V204(2,9)	-12	-11	-10
C14	V205(2,9)	-10	-11	-12
C15	V204(1), V205(1)	-8.0	-8.0	-8.0
C16	V206(7)	+217.5	+142	+73
C17	V206(2)	+73	+142	+217.5
C18	R245-R246	+63	+42.	+21
C19	R259-R260	+21	+42.	+63
C20	V206(8)	+225	+147	+75
C21	V206(3)	+75	+147	+225
None	"+370 (B)"	+322	+311	+294

Conditions of Measurement:

Spot set to the three positions using the HORIZONTAL POSITION control; HORIZONTAL DISPLAY switch set to .1 MV/CM; application of the voltmeter test probe shall not deflect the spot. The voltages shown on schematic correspond to spot center.

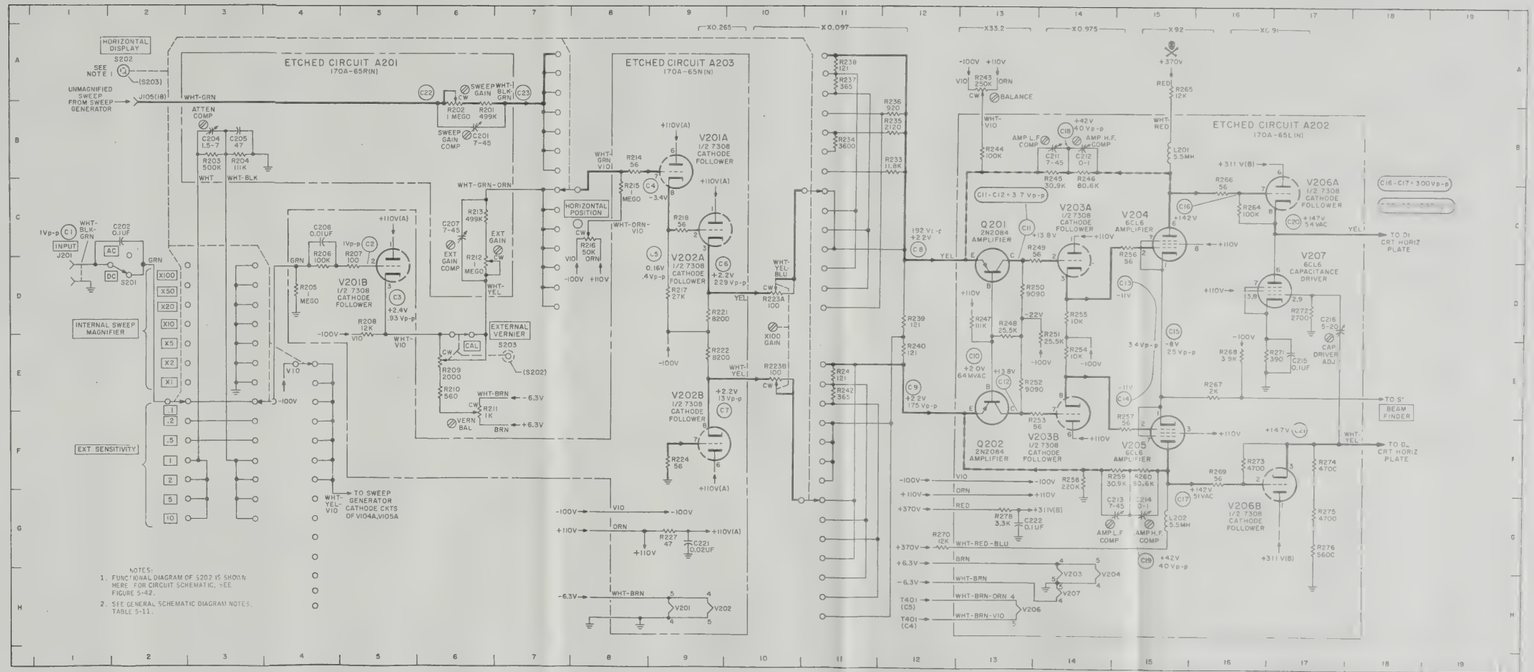

Figure 5-41. Horizontal Amplifier Schematic Diagram

Figure
5-41A

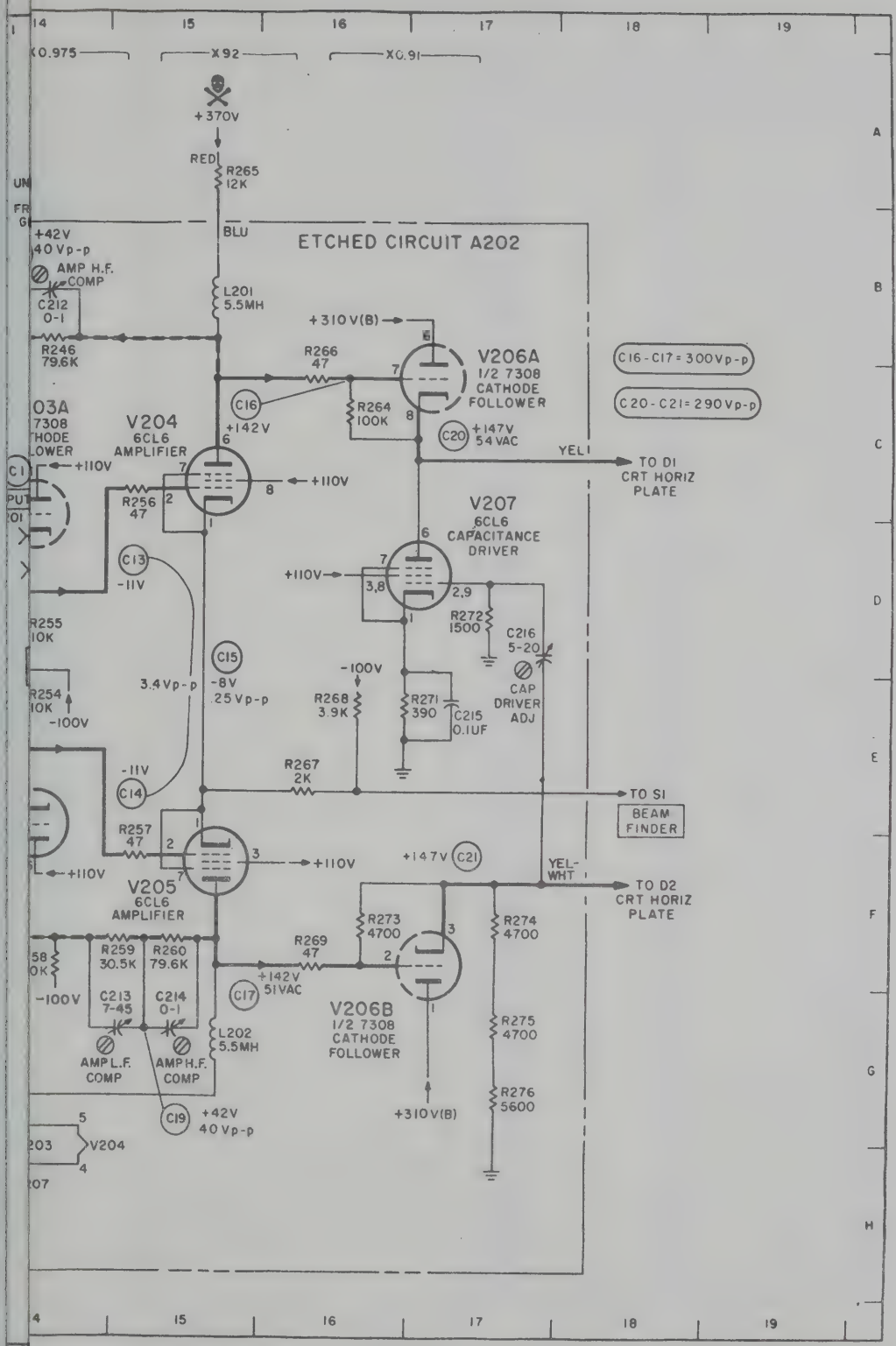

5-41A. Horizontal Amplifier Schematic Diagram, AN/USM-140C

REF. DESIG.	SCHEMATIC LOCATION
A201	A5
A202	B16
A203	A9
C201	B6
C202	C2
C204	B3
C205	B3
C206	C4
C207	C6
C211	B14
C212	B14
C213	G15
C214	G15
C215	E17
C216	D17
C221	G9
J201	C1
L201	B15
L202	G15
Q201	C13
Q202	F13
R201	B6
R202	B6
R203	B3
R204	B3
R205	D4
R206	C4
R207	C5
R208	D6
R209	E6
R210	E6
R211	E6
R212	C6
R213	C6
R214	B8
R215	C8
R216	C8
R217	D9
R218	C9
R221	D9
R222	E9
R223A	D10
R223B	E10
R224	F9
R233	B12
R234	B11
R235	B12
R236	B12
R237	A11

REF. DESIG.	SCHEMATIC LOCATION
R238	A11
R239	D12
R240	E12
R241	E11
R242	E11
R243	A13
R244	B13
R245	B14
R246	B14
R247	D13
R248	D13
R249	C14
R250	D14
R251	D14
R252	E14
R253	F14
R254	E14
R255	D14
R256	C15
R257	F15
R258	F14
R259	F15
R260	F15
R264	C16
R265	A15
R266	B16
R267	E16
R268	E16
R270	G12
R271	E17
R272	D17
R273	F16
R274	F17
R275	G17
R276	G17
R277	G9
R278	G13
S201	D2
S202	A2
S203	A2
V201A	B9
V201B	D5
V202A	D9
V202B	E9
V203A	C14
V203B	F14
V204	C15
V205	F15
V206A	B17
V206B	G16
V207	C17

Typical DC Voltages in the Horizontal Amplifier for the Following Indicated Spot Positions

Test Point	Location	Voltage vs Spot Location 2 cm Left	Center	2 cm Right
C4	V201(7)	-3.3	-3.1	-2.9
C5	V202(2)	0.058	-0.16	0.37
C6	V202(3)	+2.1	+2.2	+2.3
C7	V202(8)	+2.3	+2.2	+2.1
C8	Q201(E)	+2.1	+2.2	+2.3
C9	Q202(E)	+2.3	+2.2	+2.1
C10	Q201(B), Q202(B)	+1.9	+2.0	+2.1
C11	Q201(C)	+14.8	+13.8	+12.8
C12	Q202(C)	+12.8	+13.8	+14.8
C13	V204(2,9)	-12	-11	-10
C14	V205(2,9)	-10	-11	-12
C15	V204(1), V205(1)	-8.0	-8.0	-8.0
C16	V206(7)	+217.5	+142	+73
C17	V206(2)	+73	+142	+217.5
C18	R245-R246	+63	+42.	+21
C19	R259-R260	+21	+42.	+63
C20	V206(8)	+225	+147	+75
C21	V206(3)	+75	+147	+225
None	"+370 (B)"	+322	+311	+294

Conditions of Measurement:

Spot set to the three positions using the HORIZONTAL POSITION control; HORIZONTAL DISPLAY switch set to .1 MV/CM; application of the voltmeter test probe shall not deflect the spot. The voltages shown on schematic correspond to spot center.

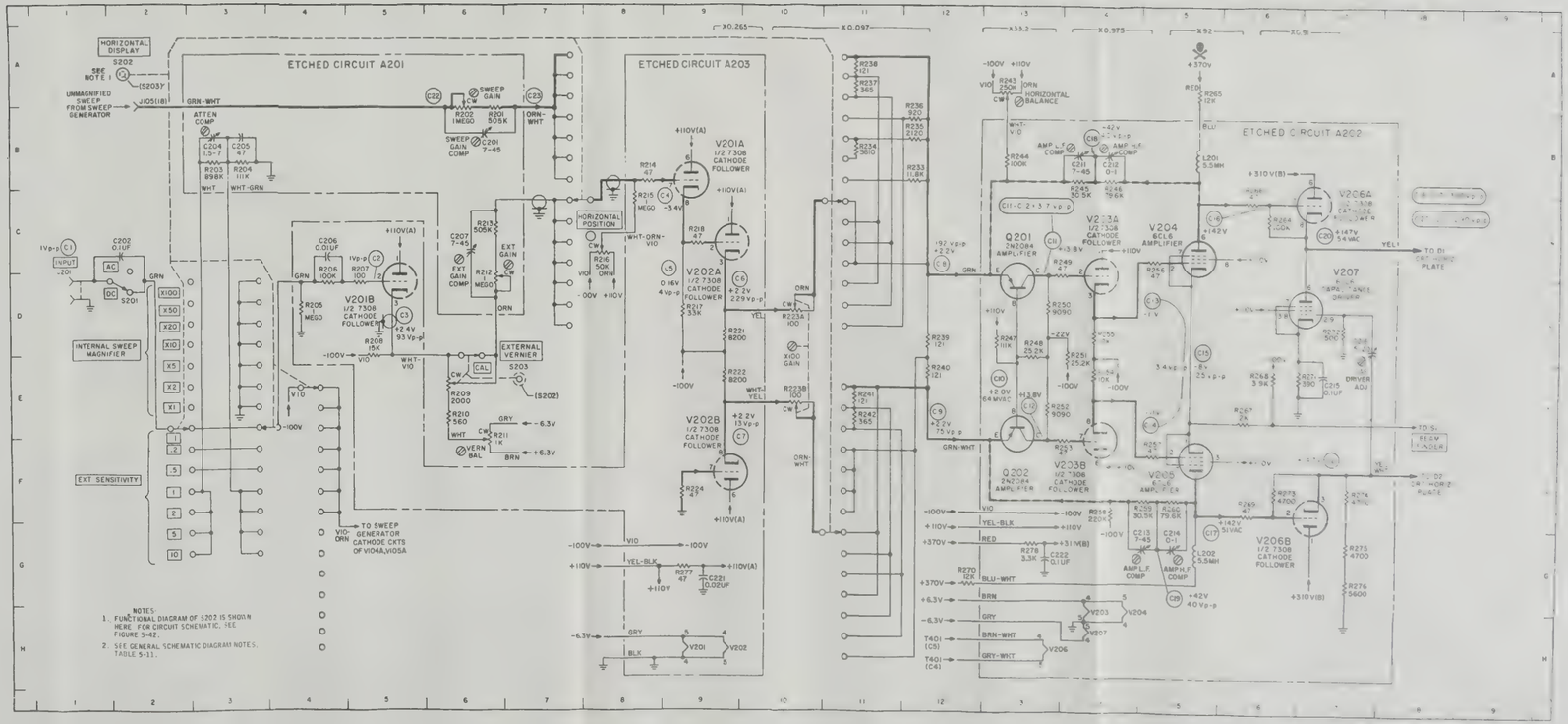

Figure 5-41A. Horizontal Amplifier Schematic Diagram, AN/USM-140C

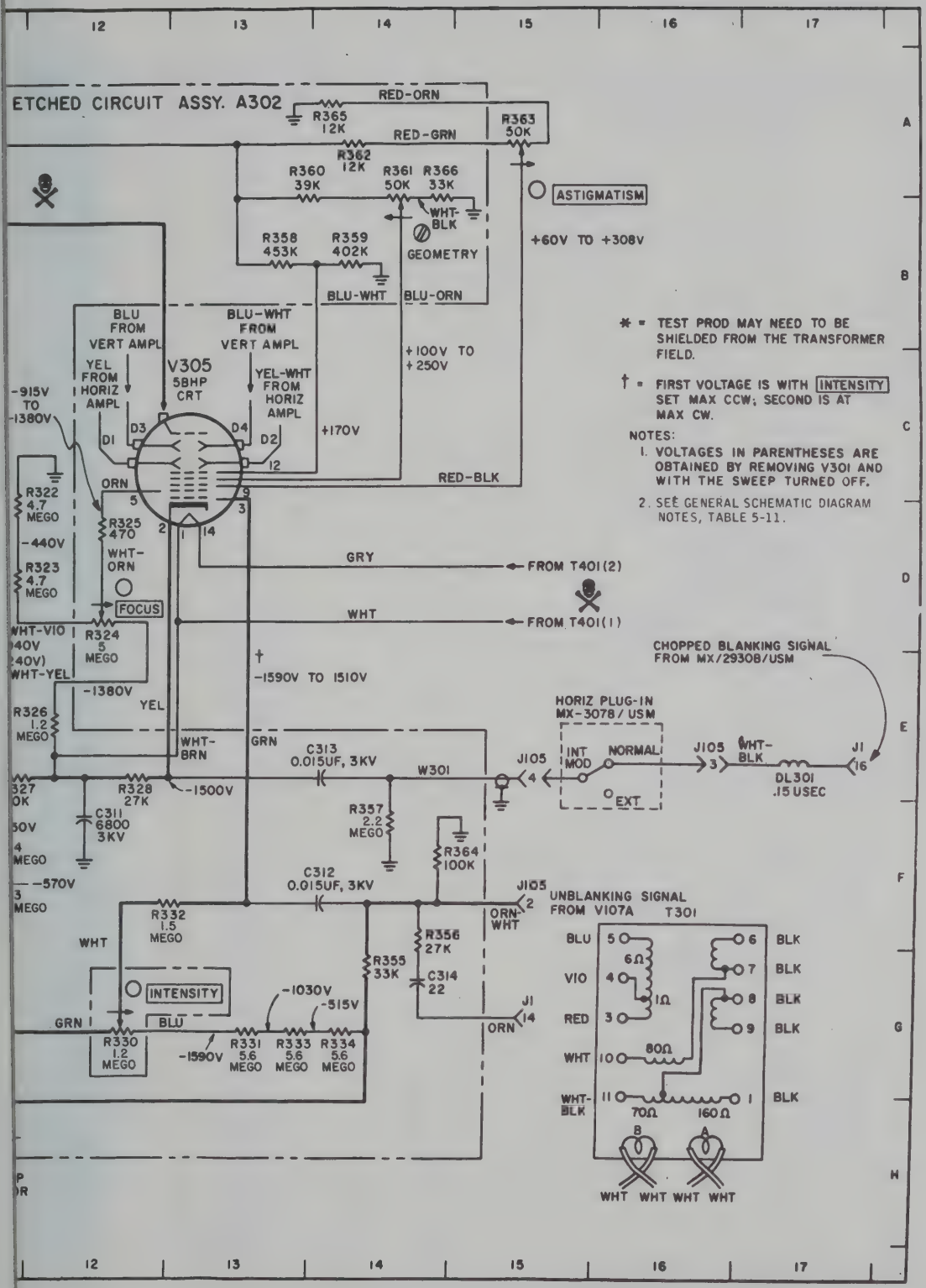

gure 5-43A. High Voltage Power Supply and Calibrator Schematic Diagram AN/USM-140C

REF. DESIG.	SCHEMATIC LOCATION
C301	B8
C302	A5
C303	D6
C304	D7
C306	C10
C307	F11
C308	G11
C309	D11
C310	F9
C311	F12
C312	F14
C313	E14
C314	G14
C315	C10
C316	C3
C317	C4
C318	G7
DL301	E17
J1	G15
J105	E15
J302	E7
L301	A5
R302	A6
R303	A7
R304	B7
R305	B6
R306	B7
R308	D7
R309	D7
R311	B10
R312	F9
R313	F11
R314	F11
R315	F11
R316	E11
R317	D11
R318	C11
R319	A8
R321	B9
R322	C12
R323	D12
R324	D12
R325	D12
R326	E12
R327	E12
R328	E12
R330	G12
R331	G13
R332	F13
R333	G13
R334	G14

REF. DESIG.	SCHEMATIC LOCATION
R335	C3
R336	D2
R337	D3
R338	D3
R339	D4
R340	D4
R341	H3
R342	B4
R343	E5
R344	E6
R345	F6
R346	F6
R347	F6
R348	G6
R349	G6
R350	G6
R351	H6
R352	H6
R353	E7
R354	F7
R355	G14
R356	F14
R357	F14
R358	B13
R359	B14
R360	A13
R361	A14
R362	A14
R363	A15
R364	F14
R365	A14
R366	A14
R367	F7
R368	C4
S302	E6
T301	F16
T301	C8
V301A	B6
V301B	B7
V303	C7
V304	C6
V305	C13
V306A	C2
V306B	D5
V307A	B5
V307B	C5
V308	C9
V309	D9
V310	E9
V311	G9

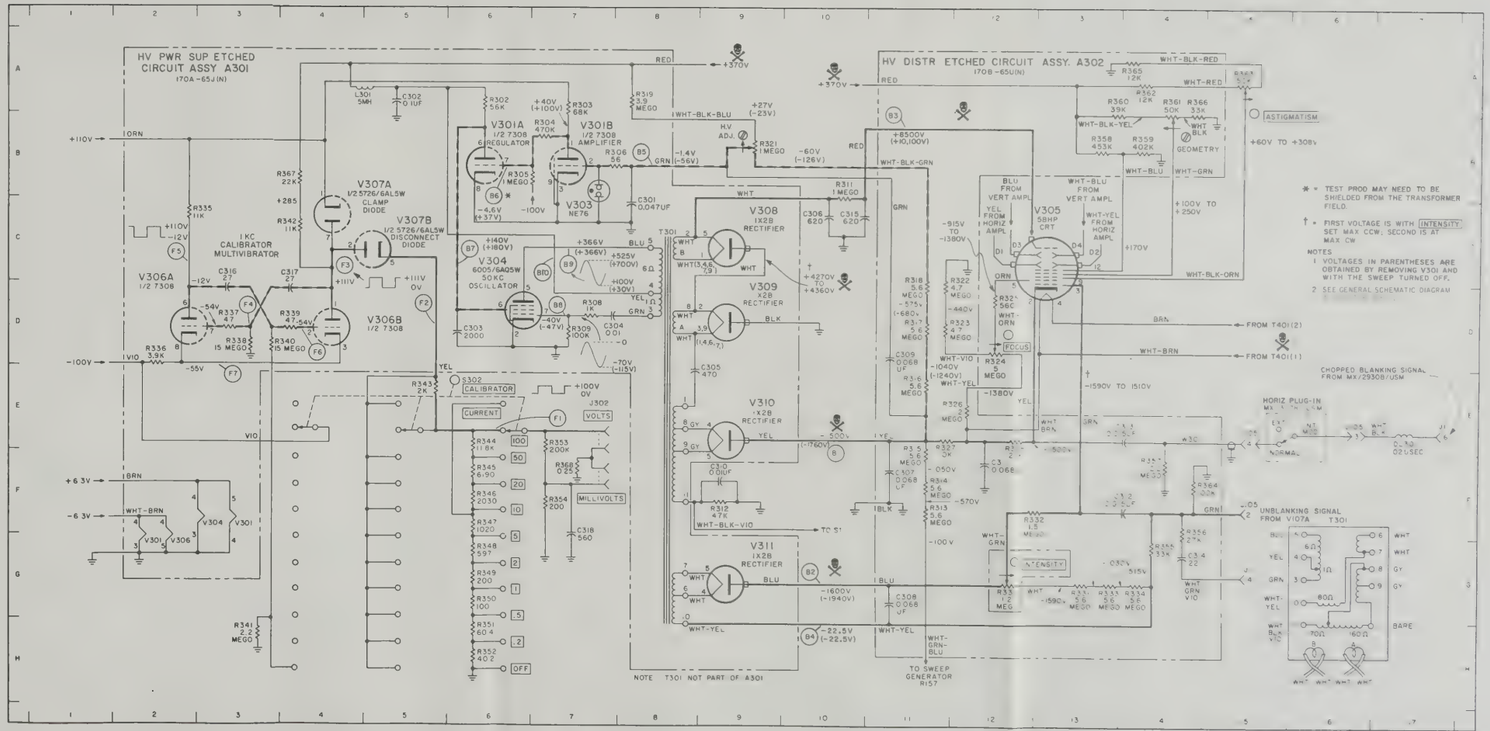
HV PWR SUP ETCHED CIRCUIT ASSY A301
HV DISTR ETCHED CIRCUIT ASSY. A302
V307A 1/2 5726/6AL5W CLAMP DIODE
V307B 1/2 5726/6AL5W DISCONNECT DIODE
V306A 1/2 7308
V306B 1/2 7308
V301A 1/2 7308 REGULATOR
V301B 1/2 7308 AMPLIFIER
V303 NE76
V304 6005/6AQ5W 50KC OSCILLATOR
1KC CALIBRATOR MULTIVIBRATOR
V308 1X2B RECTIFIER
V309 1X2B RECTIFIER
V310 1X2B RECTIFIER
V311 1X2B RECTIFIER
V305 5BHP CRT
HV ADJ
ASTIGMATISM
GEOMETRY
FOCUS
INTENSITY
CALIBRATOR
CURRENT
VOLTS
MILLIVOLTS
HORIZ PLUG-IN
UNBLANKING SIGNAL FROM V107A T301
CHOPPED BLANKING SIGNAL FROM MX/2930B/USM
TO SWEEP GENERATOR R157
NOTE T301 NOT PART OF A301
* = TEST PROD MAY NEED TO BE SHIELDED FROM THE TRANSFORMER FIELD
† = FIRST VOLTAGE IS WITH INTENSITY SET MAX CCW; SECOND IS AT MAX CW
NOTES
1 VOLTAGES IN PARENTHESES ARE OBTAINED BY REMOVING V301 AND WITH THE SWEEP TURNED OFF.
2 SEE GENERAL SCHEMATIC DIAGRAM

Figure 5-43. High Voltage Power Supply and Calibrator Schematic Diagram

Figure
5-44

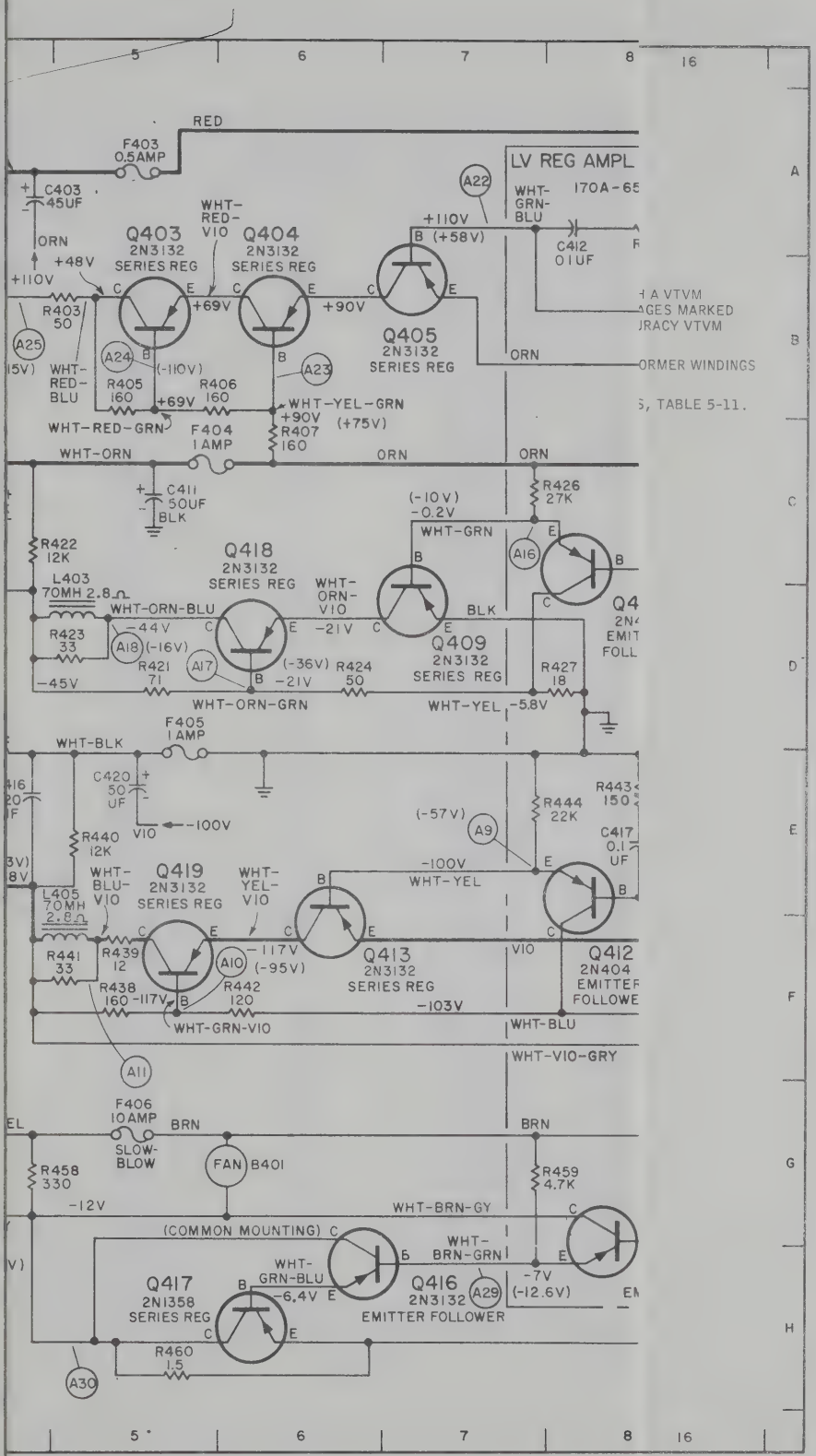

RED
F403
0.5AMP
C403
45UF
ORN
+48V
+110V
R403
50
A25
WHT-
RED-
BLU
Q403
2N3132
SERIES REG
WHT-
RED-
V10
Q404
2N3132
SERIES REG
+69V
+90V
A24
(-110V)
R405
160
R406
160
+69V
WHT-RED-GRN
A23
WHT-YEL-GRN
+90V
(+75V)
R407
160
F404
1AMP
WHT-ORN
ORN
Q405
2N3132
SERIES REG
+110V
B (+58V)
A22
LV REG AMPL
WHT-
GRN-
BLU
170A-65
C412
0.1UF
ORN
ORMER WINDINGS
S, TABLE 5-11.
C411
50UF
BLK
R422
12K
L403
70MH 2.8Ω
WHT-ORN-BLU
R423
33
-44V
A18
(-16V)
R421
71
A17
-45V
Q418
2N3132
SERIES REG
WHT-
ORN-
V10
-21V
(-36V)
-21V
R424
50
WHT-ORN-GRN
(-10V)
-0.2V
WHT-GRN
R426
27K
A16
Q409
2N3132
SERIES REG
BLK
R427
18
WHT-YEL
-5.8V
F405
1AMP
WHT-BLK
C420
50
UF
V10
-100V
R440
12K
L405
70MH
2.8Ω
WHT-
BLU-
V10
Q419
2N3132
SERIES REG
WHT-
YEL-
V10
R441
33
R439
12
A10
-117V
(-95V)
R438
160
-117V
R442
120
WHT-GRN-V10
Q413
2N3132
SERIES REG
-103V
(-57V)
A9
R444
22K
R443
150
C417
0.1
UF
-100V
WHT-YEL
V10
Q412
2N404
EMITTER
FOLLOWE
WHT-BLU
WHT-V10-GRY
A11
F406
10AMP
SLOW-
BLOW
BRN
FAN
B401
R458
330
-12V
WHT-BRN-GY
R459
4.7K
(COMMON MOUNTING)
WHT-
GRN-BLU
-6.4V
Q417
2N1358
SERIES REG
Q416
2N3132
EMITTER FOLLOWER
A29
WHT-
BRN-GRN
-7V
(-12.6V)
R460
1.5
A30

REF. DESIG.	SCHEMATIC LOCATION
C301	B8
C302	A5
C303	D6
C304	D7
C306	C10
C307	F11
C308	G11
C309	D11
C310	F9
C311	F12
C312	F14
C313	E14
C314	G14
C315	C10
C316	C3
C317	C4
C318	G7
DL301	E17
J1	G15
J105	E15
J302	E7
L301	A5
R302	A6
R303	A7
R304	B7
R305	B6
R306	B7
R308	D7
R309	D7
R311	B10
R312	F9
R313	F11
R314	F11
R315	F11
R316	E11
R317	D11
R318	C11
R319	A8
R321	B9
R322	C12
R323	D12
R324	D12
R325	D12
R326	E12
R327	E12
R328	E12
R330	G12
R331	G13
R332	F13
R333	G13
R334	G14

REF. DESIG.	SCHEMATIC LOCATION
R335	C3
R336	D2
R337	D3
R338	D3
R339	D4
R340	D4
R341	H3
R342	B4
R343	E5
R344	E6
R345	F6
R346	F6
R347	F6
R348	G6
R349	G6
R350	G6
R351	H6
R352	H6
R353	E7
R354	F7
R355	G14
R356	F14
R357	F14
R358	B13
R359	B14
R360	A13
R361	A14
R362	A14
R363	A15
R364	F14
R365	A14
R366	A14
R367	C4
R368	F7
S302	E6
T301	F16
T301	C8
V301A	B6
V301B	B7
V303	C7
V304	C6
V305	C13
V306A	C2
V306B	D5
V307A	B5
V307B	C5
V308	C9
V309	D9
V310	E9
V311	G9

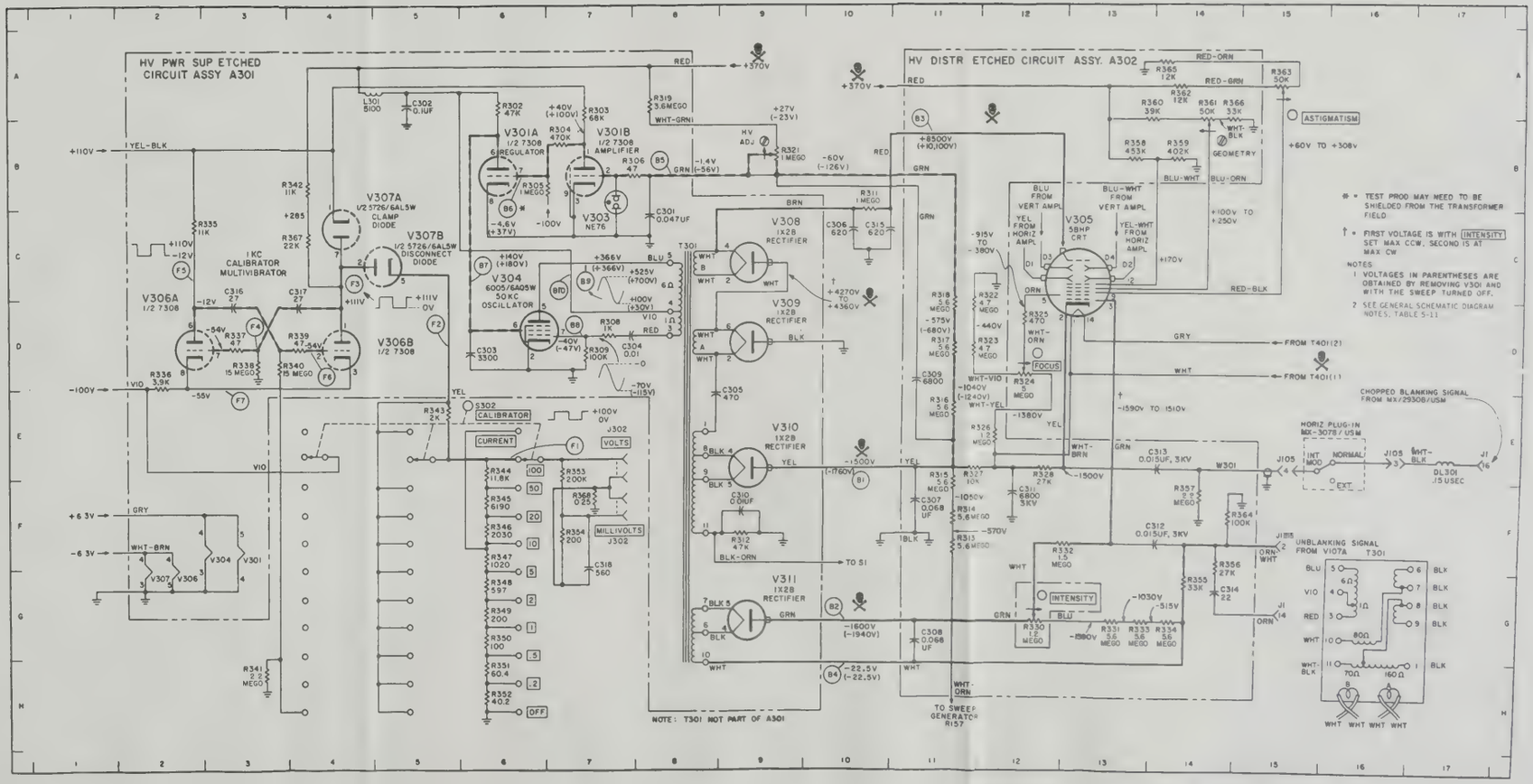
HV PWR SUP ETCHED CIRCUIT ASSY A301
HV DISTR ETCHED CIRCUIT ASSY. A302
V301A 1/2 7308 REGULATOR
V301B 1/2 7308 AMPLIFIER
V303 NE76
V304 6005/6AQ5W 50KC OSCILLATOR
V306A 1/2 7308
V307A 1/2 5726/6AL5W CLAMP DIODE
V307B 1/2 5726/6AL5W DISCONNECT DIODE
V3068 1/2 7308
1KC CALIBRATOR MULTIVIBRATOR
V308 1X2B RECTIFIER
V309 1X2B RECTIFIER
V310 1X2B RECTIFIER
V311 1X2B RECTIFIER
V305 5BHP CRT
CALIBRATOR
CURRENT
VOLTS
MILLIVOLTS
ASTIGMATISM
GEOMETRY
INTENSITY
FOCUS
HORIZ PLUG-IN MX-3078/USM
CHOPPED BLANKING SIGNAL FROM MX/2930B/USM
UNBLANKING SIGNAL FROM V107A T301
TO SWEEP GENERATOR R157
NOTE: T301 NOT PART OF A301
* = TEST PROD MAY NEED TO BE SHIELDED FROM THE TRANSFORMER FIELD.
† = FIRST VOLTAGE IS WITH INTENSITY SET MAX CCW, SECOND IS AT MAX CW
NOTES:
1 VOLTAGES IN PARENTHESES ARE OBTAINED BY REMOVING V301 AND WITH THE SWEEP TURNED OFF.
2 SEE GENERAL SCHEMATIC DIAGRAM NOTES, TABLE 5-11

Figure 5-43A. High Voltage Power Supply and Calibrator Schematic Diagram AN/USM-140C

Figure
5-44

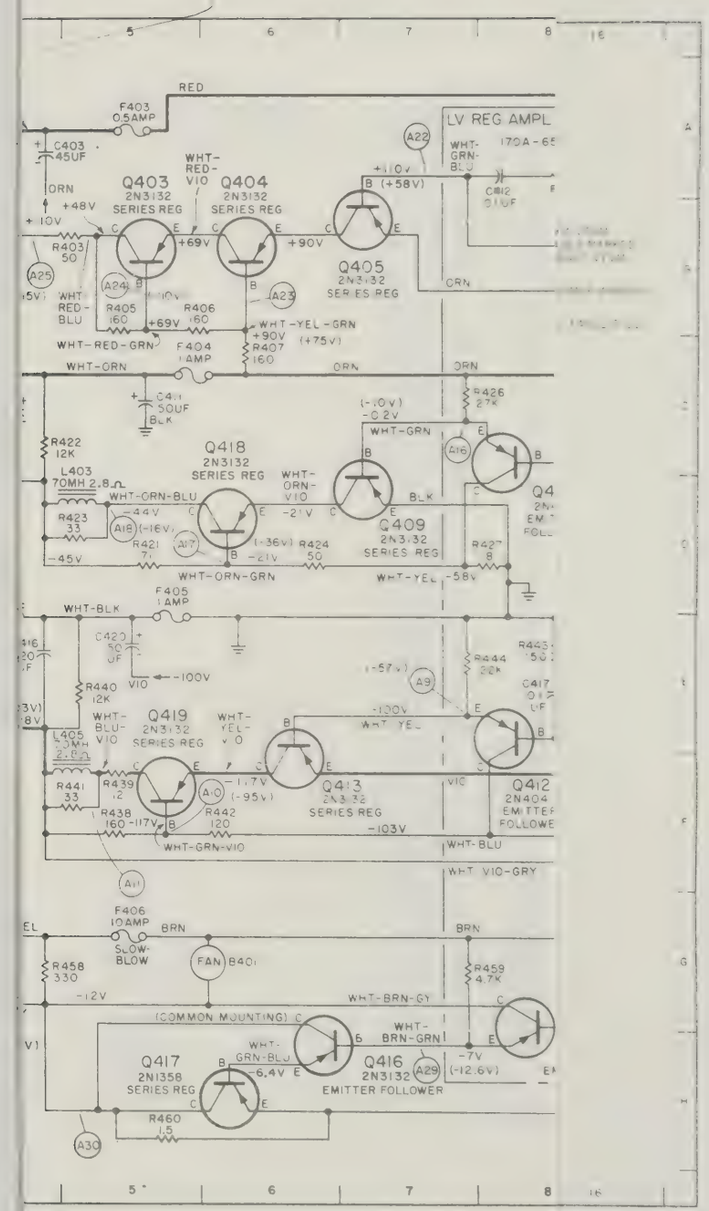

LV REG AMPL
170A-65
Q403
2N3132
SERIES REG
Q404
2N3132
SERIES REG
Q405
2N3132
SERIES REG
Q418
2N3132
SERIES REG
Q409
2N3132
SERIES REG
Q419
2N3132
SERIES REG
Q413
2N3132
SERIES REG
Q412
2N404
EMITTER FOLLOWER
Q417
2N1358
SERIES REG
Q416
2N3132
EMITTER FOLLOWER
F403
0.5AMP
F404
1AMP
F405
1AMP
F406
10AMP
SLOW-BLOW
FAN B401
(COMMON MOUNTING)

Figure 5-44

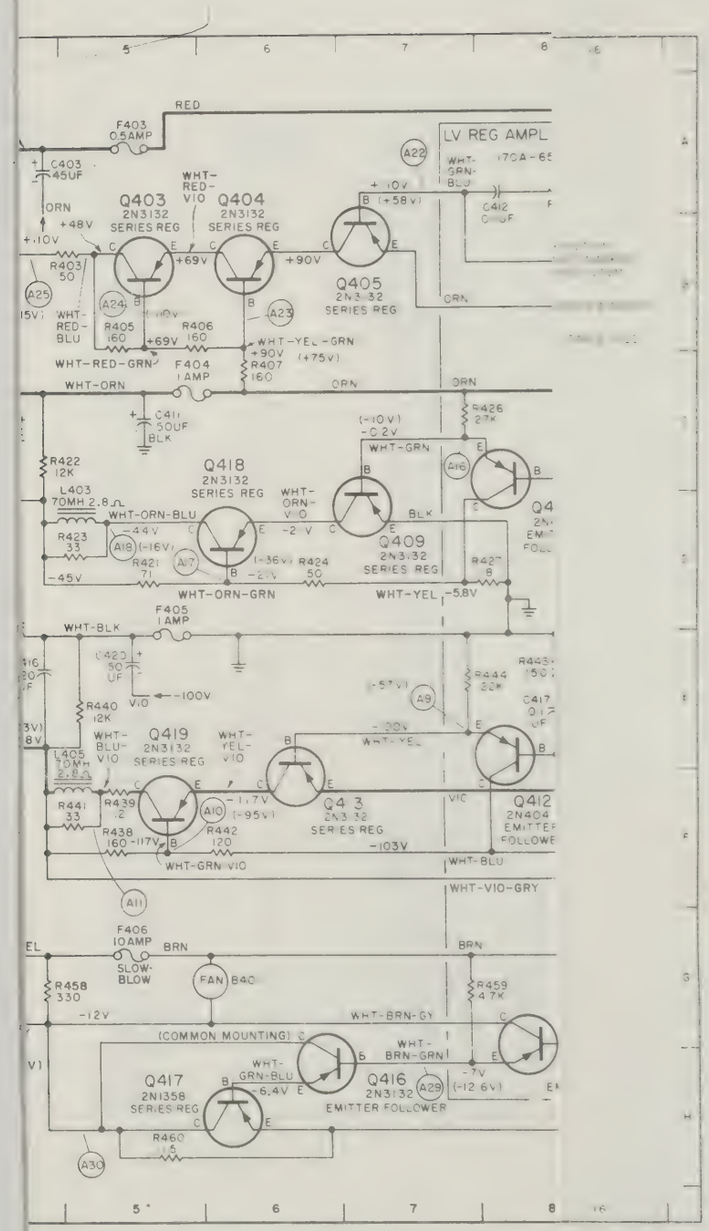

LV REG AMPL
Q403
2N3132
SERIES REG
Q404
2N3132
SERIES REG
Q405
2N3132
SERIES REG
Q418
2N3132
SERIES REG
Q409
2N3132
SERIES REG
Q419
2N3132
SERIES REG
Q413
2N3132
SERIES REG
Q412
2N404
EMITTER FOLLOWER
Q417
2N1358
SERIES REG
Q416
2N3132
EMITTER FOLLOWER
F403
0.5AMP
F404
1AMP
F405
1AMP
F406
10AMP
SLOW-BLOW
FAN
(COMMON MOUNTING)

Figure
5-64

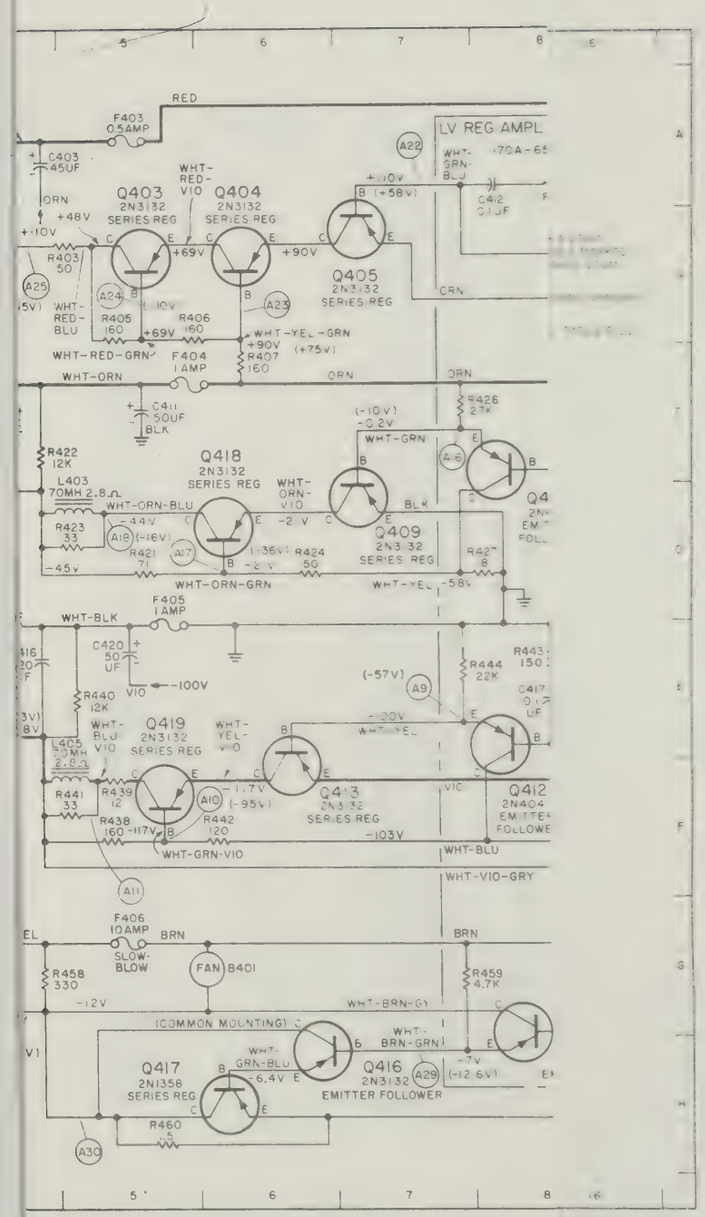
LV REG AMPL
F403 0.5AMP
C403 45UF
RED
Q403 2N3132 SERIES REG
Q404 2N3132 SERIES REG
Q405 2N3132 SERIES REG
WHT-RED-VIO
+48V
+110V
R403 50
WHT-RED-BLU
R405 160
R406 160
+69V
+90V
WHT-RED-GRN
F404 1AMP
WHT-YEL-GRN
R407 160
WHT-ORN
ORN
C411 500UF BLK
R422 12K
L403 70MH 2.8Ω
Q418 2N3132 SERIES REG
Q409 2N3132 SERIES REG
WHT-ORN-VIO
WHT-ORN-BLU
R423 33
R421 71
R424 50
WHT-ORN-GRN
R426 27K
WHT-GRN
BLK
R427 8
WHT-YEL
F405 1AMP
WHT-BLK
C420 50 UF
-100V
R440 12K
R444 22K
(-57V)
Q419 2N3132 SERIES REG
Q413 2N3132 SERIES REG
Q412 2N4044 EMITTER FOLLOWER
WHT-BLU VIO
WHT-YEL-VIO
L405 70MH 2.8Ω
R441 33
R439 12
R438 160
R442 120
WHT-GRN-VIO
WHT-BLU
WHT-VIO-GRY
F406 10AMP SLOW-BLOW
BRN
FAN B401
R458 330
R459 4.7K
-12V
WHT-BRN-G
(COMMON MOUNTING)
Q417 2N1358 SERIES REG
Q416 2N3132 EMITTER FOLLOWER
WHT-GRN-BLU
WHT-BRN-GRN
R460 5
A22
A25
A24
A23
A18
A17
A16
A9
A10
A11
A29
A30

REF. DESIG.	SCHEMATIC LOCATION
A401	A3
A402	A8
B401	G6
CR401	A3
CR402	A4
CR403	B3
CR404	B3
CR405	C3
CR406	C4
CR407	D3
CR408	D3
CR409	D3
CR410	E4
CR411	E3
CR412	E3
CR413	F10
CR414	G3
CR415	H3
CR416	G9
C401	A4
C402	D9
C403	A5
C404	A3
C405	C3
C406	E3
C407	H3
C408	G4
C409	G9
C410	B9
C411	C5
C412	A8
C413	10F
C416	E4
C417	E8
C418	E9
C419	E11
C420	E5
C425	G4
C426	G9
DS401	E2
DS402	E2
DS403	G14
DS404	H14
DS405	G15
DS406	H15

REF. DESIG.	SCHEMATIC LOCATION
FL401	B2
F401	B1
F402	B2
F403	A5
F404	C5
F405	D5
F406	G5
J401	A2
L402	B4
L403	D5
L404	D4
L405	E5
P401	A2
P402	A1
Q401	A10
Q402	A10
Q403	A5
Q404	A6
Q405	B7
Q406	C10
Q407	C10
Q408	D8
Q409	D7
Q410	E10
Q411	E10
Q412	F8
Q413	F7
Q414	G10
Q415	H6
Q416	H7
Q417	H5
Q418	C6
Q419	E5
R400	E2
R401	D2
R402	A4
R403	B5
R405	B5
R406	B5
R407	C6
R408	A9
R409	B9
R410	B9
R411	B9
R412	A10
R413	B10
R415	A12

REF. DESIG.	SCHEMATIC LOCATION
R416	B12
R417	A8
R421	D5
R422	C5
R423	D5
R424	D6
R425	C9
R426	C8
R427	D8
R428	C9
R429	D10
R430	D9
R431	D9
R432	C10
R433	D10
R434	C12
R435	D12
R437	F10
R438	F5
R439	F5
R440	E5
R441	F5
R442	F6
R443	E8
R444	E8
R445	F9
R446	F8
R447	E9
R448	E10
R449	F11
R450	E12
R451	E12
R452	E12
R458	G5
R459	G8
R460	H5
R461	H9
R462	G11
R463	G11
R464	H13
R1025	H14
S401	C2
S402	H2
S403	G14
T401	A2
V401	E9
W401	A2

Typical Peak-to-Peak Ripple Voltage Levels

TEST POINT	VOLTS
A4-A5	6 mv
A20-A22	10 mv
A22-A25	11 V
A5-A25	11 V
A26	675 V
A4-Gnd	4.5 mv
A13-A16	20 mv
A16-A18	10 V
A4-A18	11 V
A19	475 V
A3-Gnd	2 mv
A6-A9	10 mv
A9-A11	8 V
A12	425 V
A1-A2	2.5 mv
A27-A28	75 mv
A28-A30	1.2 V
A1-A30	1.2 V
A31	130 V

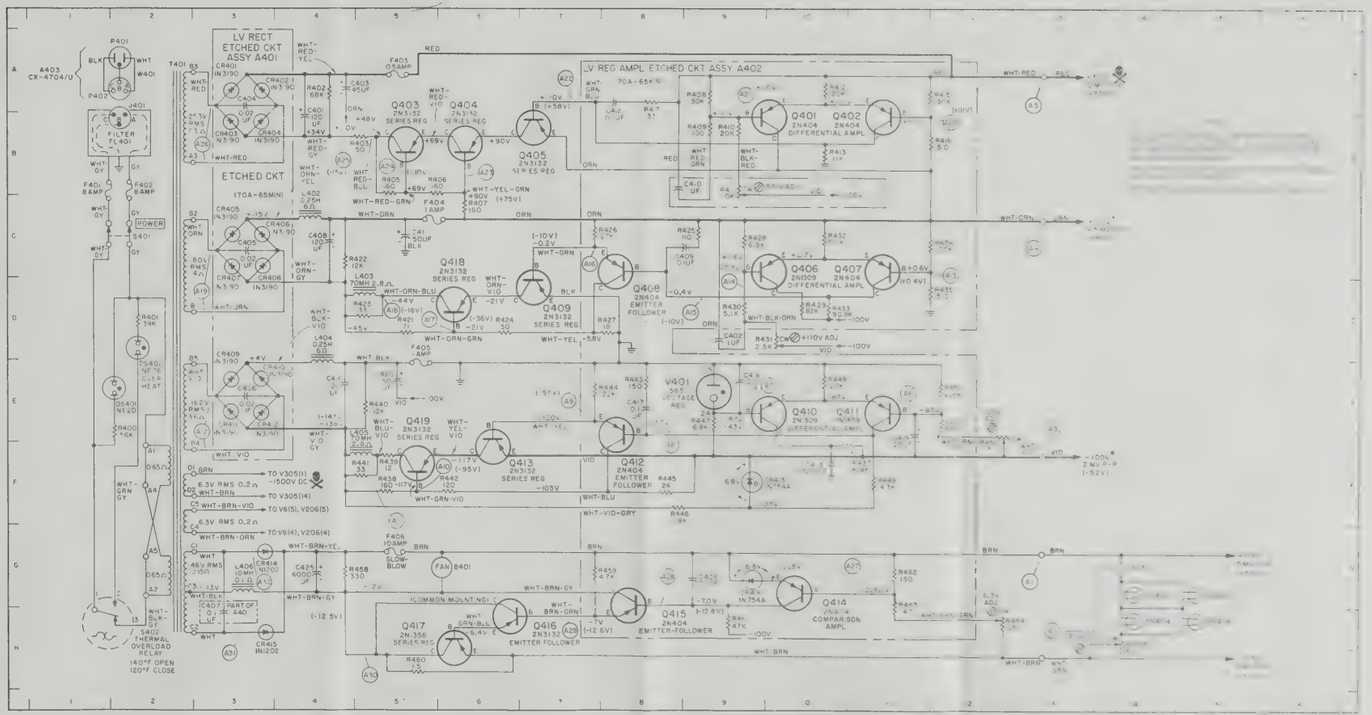

Figure 5-44. Low Voltage Power Supply Schematic Diagram

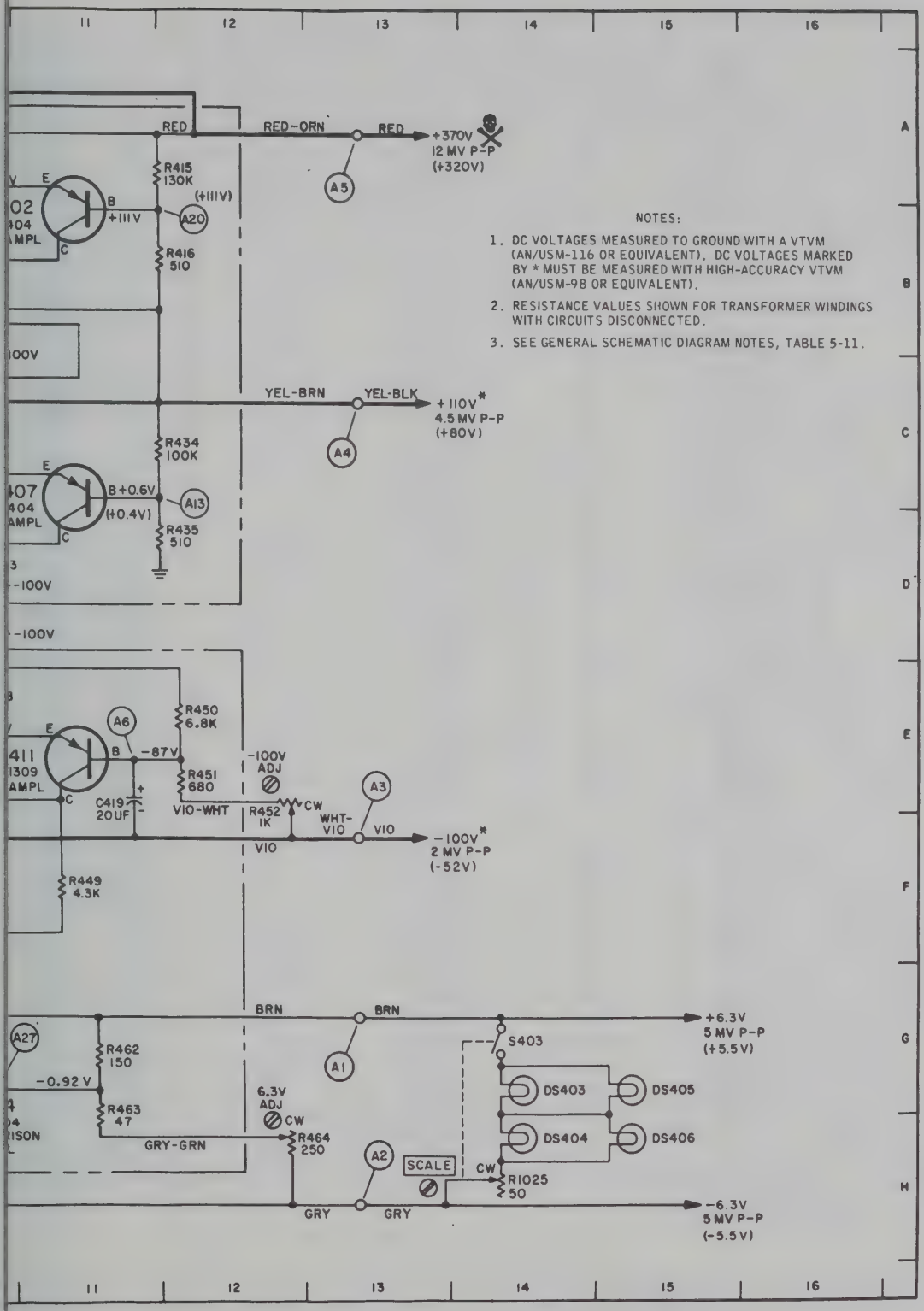

Figure 5-44A. Low Voltage Power Supply Schematic Diagram, AN/USM-140C

REF. DESIG.	SCHEMATIC LOCATION
A401	A3
A402	A8
B401	G6
CR401	A3
CR402	A4
CR403	B3
CR404	B3
CR405	C3
CR406	C4
CR407	D3
CR408	D3
CR409	D3
CR410	E4
CR411	E3
CR412	E3
CR413	F10
CR414	G3
CR415	H3
CR416	G9
C401	A4
C402	D9
C403	A5
C404	A3
C405	C3
C406	E3
C407	H3
C408	C4
C409	C9
C410	B9
C411	C5
C412	A8
C416	E4
C417	E8
C418	E9
C419	E11
C420	E5
C425	G4
C426	G9
DS401	E2
DS402	E2
DS403	G14
DS404	H14
DS405	G15
DS406	H15

REF. DESIG.	SCHEMATIC LOCATION
FL401	B2
F401	B1
F402	B2
F403	A5
F404	C5
F405	D5
F406	G5
J401	A2
L402	B4
L403	D5
L404	D4
L405	E5
P401	A2
P402	A1
Q401	A10
Q402	A10
Q403	A5
Q404	A6
Q405	B7
Q406	C10
Q407	C10
Q408	D8
Q409	D7
Q410	E10
Q411	E10
Q412	F8
Q413	F7
Q414	G10
Q415	H8
Q416	H7
Q417	H5
Q418	C6
Q419	E5
R400	E2
R401	D2
R402	A4
R403	B5
R405	B5
R406	B5
R407	C6
R408	A9
R409	B9
R410	B9
R411	B9
R412	A10
R413	B10
R415	A12

REF. DESIG.	SCHEMATIC LOCATION
R416	B12
R417	A8
R421	D5
R422	C5
R423	D5
R424	D6
R425	C9
R426	C8
R427	D8
R428	C9
R430	D9
R431	D9
R432	C10
R433	D10
R434	C12
R435	D12
R438	F5
R439	F5
R440	E5
R441	F5
R442	F6
R443	E8
R444	E8
R445	F9
R446	F8
R447	E9
R448	E10
R449	F11
R450	E12
R451	E12
R452	E12
R458	G5
R459	G8
R460	H5
R461	H9
R462	G11
R463	G11
R464	H13
R1025	H14
S401	C2
S402	H2
S403	G14
T401	A2
V401	E9
W401	A2

Typical Peak-to-Peak Ripple Voltage Levels

TEST POINT	VOLTS
A4-A5	6 mv
A20-A22	10 mv
A22-A25	11 V
A5-A25	11 V
A26	675 V
A4-Gnd	4.5 mv
A13-A16	20 mv
A16-A18	10 V
A4-A18	11 V
A19	475 V
A3-Gnd	2 mv
A6-A9	3 mv
A9-A11	8 V
A12	425 V
A1-A2	2.5 mv
A27-A28	75. mv
A28-A30	1.2 V
A1-A30	1.2 V
A31	130 V

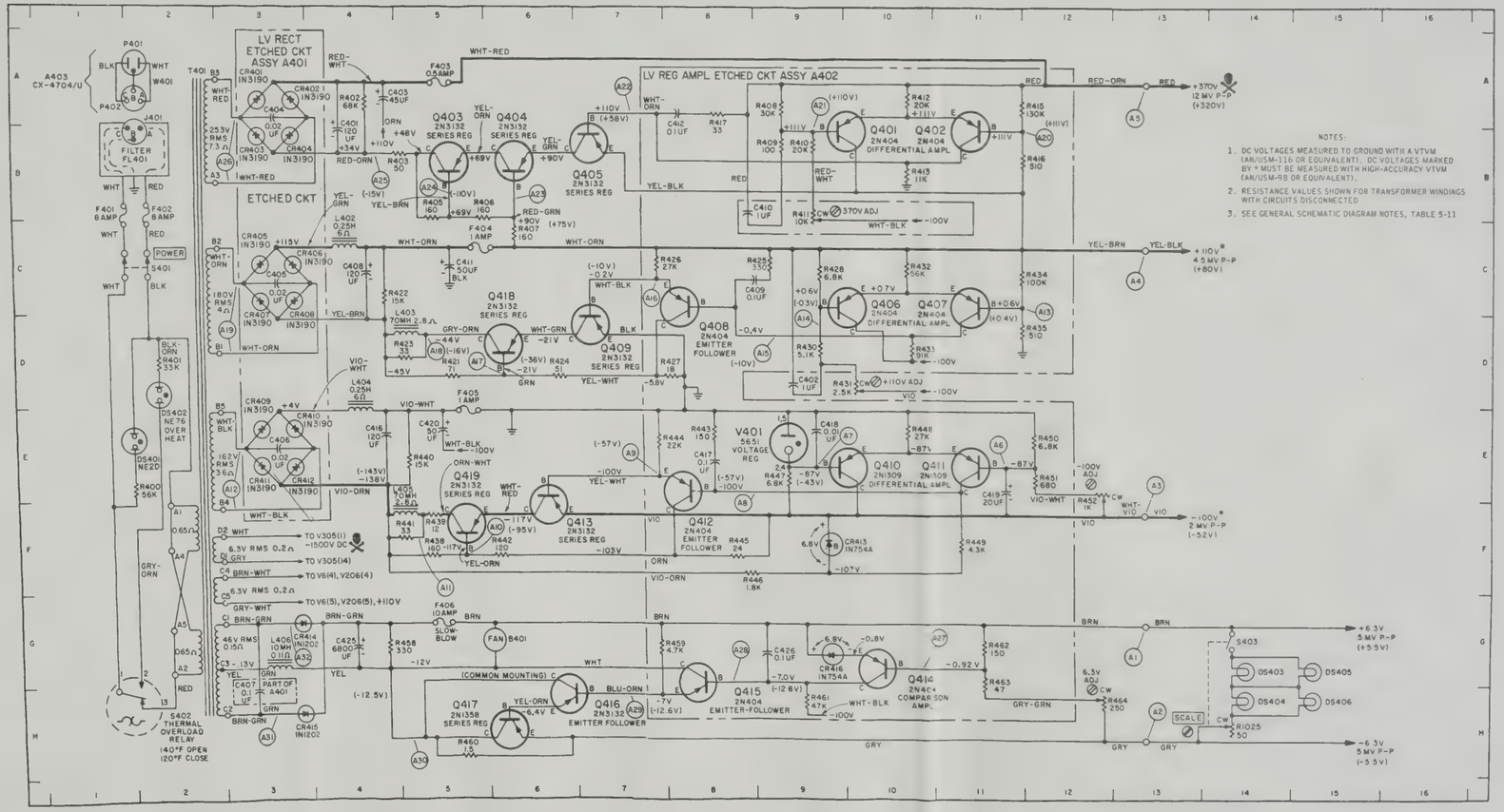
LV RECT ETCHED CKT ASSY A401
ETCHED CKT
LV REG AMPL ETCHED CKT ASSY A402
A403 CX-4704/U
T401
FILTER FL401
POWER
S401
F401 8AMP
F402 8AMP
DS402 NE76 OVER HEAT
DS401 NE2D
S402 THERMAL OVERLOAD RELAY 140°F OPEN 120°F CLOSE
F403 0.5AMP
F404 1AMP
F405 1AMP
F406 10AMP SLOW-BLOW
FAN B401
Q401 2N404 DIFFERENTIAL AMPL
Q402 2N404 DIFFERENTIAL AMPL
Q403 2N3132 SERIES REG
Q404 2N3132 SERIES REG
Q405 2N3132 SERIES REG
Q406 2N404 DIFFERENTIAL AMPL
Q407 2N404
Q408 2N404 EMITTER FOLLOWER
Q409 2N3132 SERIES REG
Q410 2N3109 DIFFERENTIAL AMPL
Q411 2N3109
Q412 2N404 EMITTER FOLLOWER
Q413 2N3132 SERIES REG
Q414 2N404 COMPARSON AMPL
Q415 2N404 EMITTER-FOLLOWER
Q416 2N3132 EMITTER FOLLOWER
Q417 2N1358 SERIES REG
Q418 2N3132 SERIES REG
Q419 2N3132 SERIES REG
V401 5651 VOLTAGE REG
CR413 IN754A
CR416 IN754A
+370V 12 MV P-P (+320V)
+110V* 4.5 MV P-P (+80V)
-100V* 2 MV P-P (-52V)
+6.3V 5 MV P-P (+5.5V)
-6.3V 5 MV P-P (-5.5V)
NOTES:
1. DC VOLTAGES MEASURED TO GROUND WITH A VTVM (AN/USM-116 OR EQUIVALENT). DC VOLTAGES MARKED BY * MUST BE MEASURED WITH HIGH-ACCURACY VTVM (AN/USM-98 OR EQUIVALENT).
2. RESISTANCE VALUES SHOWN FOR TRANSFORMER WINDINGS WITH CIRCUITS DISCONNECTED
3. SEE GENERAL SCHEMATIC DIAGRAM NOTES, TABLE 5-11

Figure 5-44A. Low Voltage Power Supply Schematic Diagram, AN/USM-140C

Figure
5-46

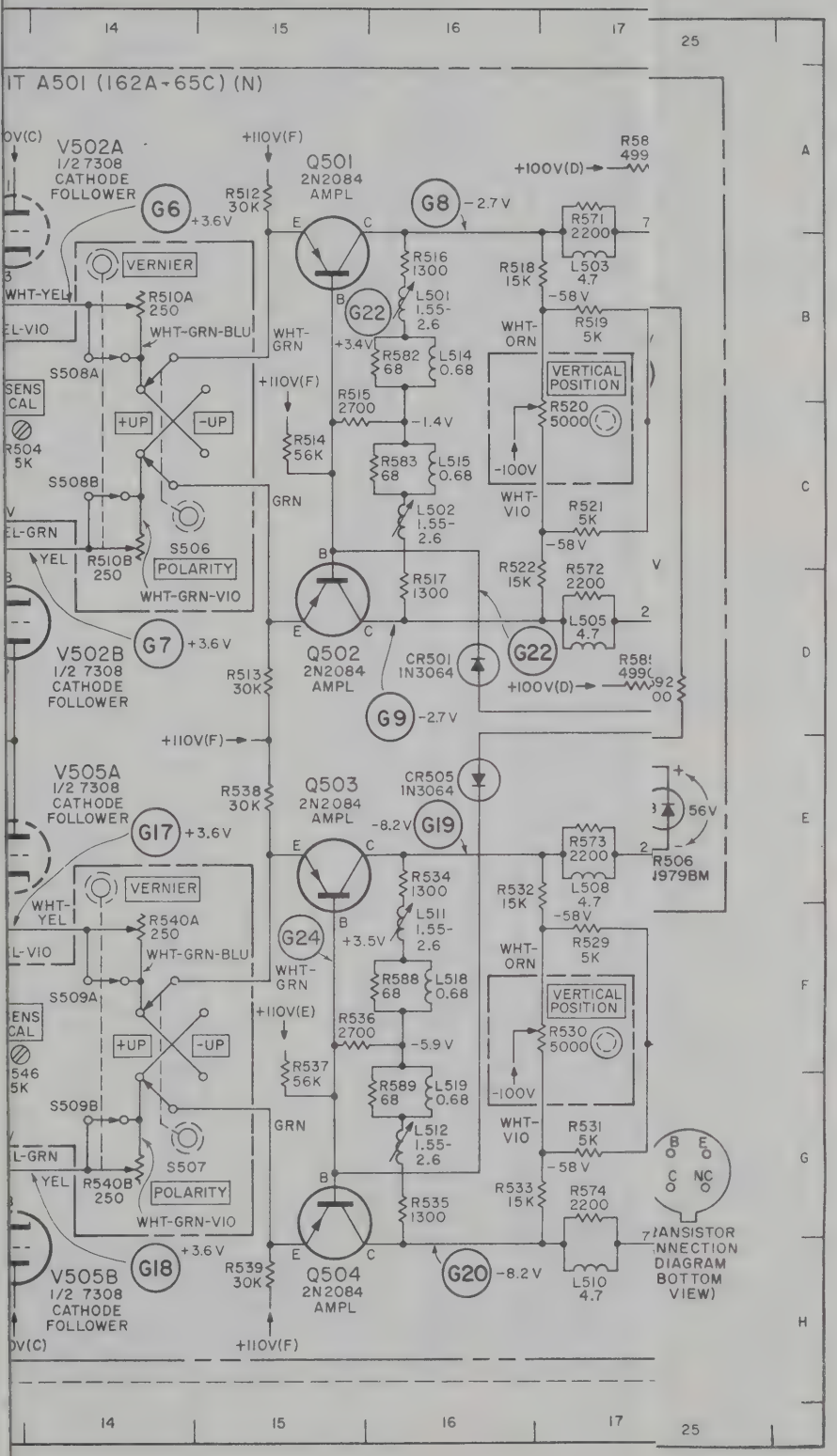

IT A501 (162A-65C) (N)
V502A
1/2 7308
CATHODE
FOLLOWER
G6
+3.6V
VERNIER
R510A
250
WHT-GRN-BLU
WHT-YEL
S508A
SENS
CAL
R504
5K
+UP
-UP
S508B
S506
POLARITY
R510B
250
WHT-GRN-VIO
YEL
V502B
1/2 7308
CATHODE
FOLLOWER
G7
+3.6V
+110V(F)
R512
30K
Q501
2N2084
AMPL
G8
-2.7V
R516
1300
L501
1.55-
2.6
G22
+3.4V
R582
68
L514
0.68
R515
2700
-1.4V
R514
56K
R583
68
L515
0.68
L502
1.55-
2.6
R517
1300
Q502
2N2084
AMPL
R513
30K
G9
-2.7V
CR501
1N3064
+100V(D)
R571
2200
L503
4.7
R518
15K
-58V
R519
5K
WHT-
ORN
VERTICAL
POSITION
R520
5000
-100V
WHT-
VIO
R521
5K
R522
15K
R572
2200
L505
4.7
V505A
1/2 7308
CATHODE
FOLLOWER
G17
+3.6V
R538
30K
Q503
2N2084
AMPL
CR505
1N3064
-8.2V
G19
R573
2200
L508
4.7
56V
R506
1979BM
R534
1300
L511
1.55-
2.6
G24
+3.5V
R540A
250
S509A
R588
68
L518
0.68
R536
2700
-5.9V
R537
56K
R589
68
L519
0.68
L512
1.55-
2.6
R535
1300
R532
15K
R529
5K
R530
5000
R531
5K
R533
15K
R574
2200
L510
4.7
S509B
S507
R540B
250
G18
+3.6V
V505B
1/2 7308
CATHODE
FOLLOWER
R539
30K
Q504
2N2084
AMPL
G20
-8.2V
+110V(E)
B E
C NC
TRANSISTOR
CONNECTION
DIAGRAM
BOTTOM
VIEW)

REF. DESIG.	SCHEMATIC LOCATION
CR501	D16
CR502	B23
CR503	A23
CR504	D22
CR505	E16
CR506	E25
C503	G11
C504	C18
C506	E21
C507	C21
C508	D22
C509	B24
C510	B23
C511	D24
C515	A21
C516	G11
C517	F11
C518	F11
C519	A20
C522	H18
C523	F18
C1501	A1
C1502	H2
C1503	A4
C1504	B4
C1505	B3
C1506	B4
C1507	B4
C1508	C4
C1509	C3
C1510	C4
C1511	C4
C1512	D4
C1513	D3
C1514	D3
C1515	D4
C1516	D4
C1517	E3
C1518	E3
C1519	E4
C1520	E4
C1521	E3
C1522	E3
C1523	E4
C1524	F3
C1525	F3
C1526	F4
C1527	F4
C1528	F3
C1529	F3
C1530	G4
C1531	G4
C1532	G3
C1533	G3
C1534	G4
C1535	G4
C1536	G4
C1537	H3
C1538	H4
C1539	H4
C1540	B3
C1541	C3
C1544	B6
C1545	C6
C1546	A6
C1547	A6
C1548	B5
C1549	B7
C1550	B6
C1551	B6
C1552	C5
C1553	C6
C1554	C6
C1555	C6
C1556	D6
C1557	D6
C1558	D5
C1559	D6
C1560	D7
C1561	D7
C1562	C12
C1563	B13
C1564	C13
C1565	C13
C1566	B13
C1567	F5
C1568	F6
C1569	F6
C1570	F7
C1571	F5
C1572	F6
C1573	F6
C1574	G7
C1575	G6
C1576	G6
C1577	G6
C1578	H6
C1579	H5
C1580	H6
C1581	H6
C1582	H7
C1583	C10
C1589	D8
C1590	D8
C1591	A8
C1592	B10
C1593	G8
C1595	E10
J501	A1
J502	H1
L501	B16
L502	C16
L503	B17
L505	D17
L508	E17
L510	H17
L511	F16
L512	G16
L513	A21
L514	B16
L515	C16
L516	B19
L517	C19
L518	F16
L519	G16
P501	A20
P501	B10
Q501	A15
Q502	D15
Q503	E15
Q504	H15
R501	B12
R502	C12
R503	B13
R504	C13
R505	C13
R507	B13
R508	C13
R509	C13
R510A	B14
R510B	C14
R512	A15
R513	D15
R514	C15
R515	C15
R516	B16
R517	D16
R518	B16
R519	B17
R520	C17
R521	C17
R522	D16
R523	B17
R524	C17
R525	D17
R526	C18
R527	B12
R528	D12
R529	F17
R530	F17
R531	G17
R532	F16
R533	G16
R534	E16
R535	G16
R536	F15
R537	G15
R538	E15
R539	H15
R540A	F14
R540B	G14
R542	F13
R543	F13
R544	G13
R545	F13
R546	G13
R547	G13
R548	F12
R549	G12
R550	E12
R551	H12
R552	C18
R553	H20
R554	C20
R555	E21
R556	B21
R557	B21
R558	C21
R559	C21
R560	D21
R561	G22
R562	A24
R563	B24
R564	C24
R565	E24
R566	C23
R567	C23
R568	E23
R570	E24
R571	A17
R572	D17
R573	E17
R574	G17
R575	F11
R576	G11
R577	A22
R579	A21
R580	F11
R581	F11
R582	B16
R583	F16
R584	E16
R585	D17
R586	D19
R587	D19
R588	F16
R589	G16
R590	E10
R591	D23
R592	D25
R593	E23
R1500	A3
R1501	B4
R1502	B4
R1503	C4
R1504	D4
R1505	D4
R1506	D4
R1507	D4
R1508	E4
R1509	F4
R1510	F4
R1511	F4
R1512	F4
R1513	F4
R1514	F4
R1515	F4
R1516	H4
R1517	G4
R1518	G4
R1519	G4
R1520	H4
R1521	H4
R1522	H4
R1523	H4
R1524	H4
R1530	A9
R1531	A9
R1532	B9
R1533	C9
R1534	C9
R1535	D9
R1536	D9
R1537	C8
R1538	D7
R1539	F9
R1540	E7
R1541	E6
R1542	F7
R1543	F7
R1544	F6
R1545	F7
R1546	G7
R1547	G6
R1548	G7
R1549	G7
R1550	G6
R1551	H5
R1552	H7
R1553	H7
R1560	D9
R1561	D10
R1563	A8
R1564	G8
R1568	E10
S501	A1
S502	A5
S503	G2
S504	H5
S505	B8
S506	C14
S507	G14
S508A	B14
S508B	C14
S509A	F14
S509B	G14
T501	E22
V501	B11
V501A	A12
V501B	D12
V502	B11
V502A	A14
V502B	D14
V503A	B18
V503B	D18
V504A	E12
V504B	H12
V505	C11
V505A	E14
V505B	H14
V506	C11
V506A	E18
V506B	G18
V507A	C21
V507B	C22
V508A	D23
V508B	C24
V509	D21

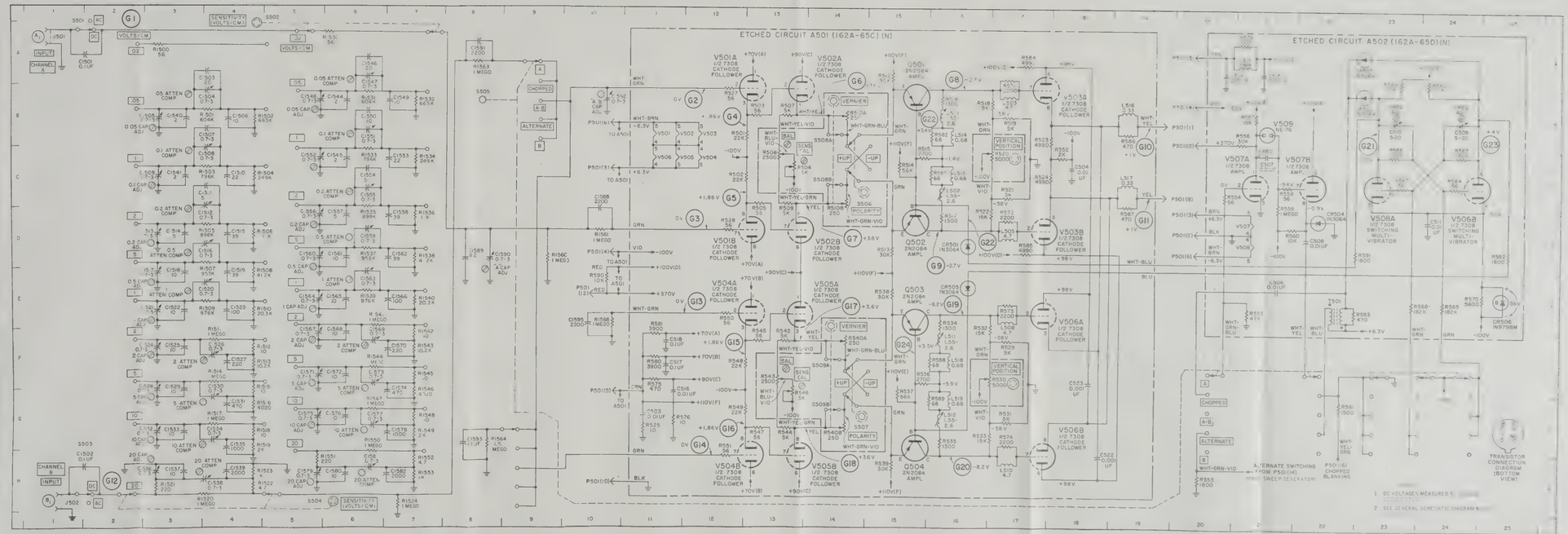

Figure 5-46. MX-2930B/USM Dual Trace Preamplifier Schematic Diagram

REF. DESIG.	SCHEMATIC LOCATION
CR501	D16
CR502	B23
CR503	A23
CR504	D22
CR505	E16
CR506	E25
C503	G11
C504	C18
C506	E21
C507	C21
C508	D22
C509	B24
C510	B23
C511	D24
C515	A21
C516	G11
C517	F11
C518	F11
C519	A20
C522	H16
C523	F18
C1500	A4
C1501	A1
C1502	B2
C1503	A4
C1504	B4
C1505	B3
C1506	B4
C1507	B4
C1508	C4
C1509	C3
C1510	C4
C1511	C4
C1512	D4
C1513	D3
C1514	D4
C1515	E4
C1516	D4
C1517	E3
C1518	E3
C1519	E4
C1520	E4
C1521	E3
C1522	E3
C1523	E4
C1524	F3
C1525	F3
C1526	F4
C1527	F4
C1528	F3
C1529	F3
C1530	G4

REF. DESIG.	SCHEMATIC LOCATION
C1531	G4
C1532	G3
C1533	G3
C1534	G4
C1535	C4
C1536	H3
C1537	H3
C1538	H4
C1539	H4
C1540	B3
C1541	C3
C1544	B6
C1545	C6
C1546	A6
C1547	A6
C1548	B5
C1549	B7
C1550	B6
C1551	B6
C1552	C5
C1553	C7
C1554	C6
C1555	C6
C1556	D6
C1557	D6
C1558	D7
C1559	D6
C1560	D5
C1561	D6
C1562	D7
C1563	E6
C1564	E5
C1565	E6
C1566	E7
C1567	F5
C1568	F6
C1569	F6
C1570	F7
C1571	F5
C1572	F6
C1573	F6
C1574	G7
C1575	G5
C1576	G6
C1577	G6
C1578	G7
C1579	H5
C1580	H6
C1581	H6
C1582	H7
C1583	C10

REF. DESIG.	SCHEMATIC LOCATION
C1589	D8
C1590	D8
C1591	A8
C1592	B10
C1593	G8
C1595	E10
J501	A1
J502	H1
L501	B16
L502	C16
L503	B17
L505	D17
L508	E17
L510	H17
L511	F16
L512	G16
L513	A21
L514	B16
L515	C15
L516	B19
L517	C19
L518	F16
L519	G16
P501	A20
P501	B10
Q501	A15
Q502	D15
Q503	E15
Q504	H15
R501	B12
R502	C12
R503	B13
R504	C13
R505	C13
R507	B13
R508	C13
R509	C13
R510A	B14
R510B	C14
R512	A15
R513	D15
R514	C15
R515	E15
R516	B16
R517	D16
R518	B16
R519	B17
R520	C17
R521	C17
R522	D16
R523	B17

REF. DESIG.	SCHEMATIC LOCATION
R524	C17
R525	G11
R527	B12
R528	D12
R529	F17
R530	F17
R531	G17
R532	F16
R533	G16
R534	E16
R535	G16
R536	F15
R537	G15
R538	E15
R540A	F14
R540B	G14
R542	F13
R543	F13
R544	G13
R545	F13
R546	G13
R547	G13
R548	F12
R549	G12
R550	E12
R551	H12
R552	C18
R553	H20
R554	C20
R555	E21
R556	B21
R557	B21
R558	C21
R559	C21
R560	D21
R561	G22
R562	A24
R563	B24
R564	C24
R565	E24
R566	A23
R567	C23
R568	E23
R570	E24
R571	A17
R572	D17
R573	E17
R574	G17
R575	F11
R576	G11

REF. DESIG.	SCHEMATIC LOCATION
R577	A22
R579	A21
R580	F11
R581	F11
R582	B16
R583	C16
R584	A17
R585	D17
R586	B19
R587	D19
R588	F16
R589	G16
R590	E10
R591	D23
R592	D25
R593	E23
R1500	A3
R1501	B4
R1502	B4
R1503	C4
R1504	C4
R1505	D4
R1506	D4
R1507	E4
R1508	E4
R1509	E4
R1510	E4
R1511	F4
R1512	F4
R1513	F4
R1514	G4
R1515	G4
R1516	G4
R1517	G4
R1518	G4
R1519	G4
R1520	H4
R1521	H3
R1522	H4
R1523	H4
R1524	H7
R1530	A6
R1531	B6
R1532	B7
R1535	D6
R1536	D7
R1537	D6
R1538	D7
R1539	E6

REF. DESIG.	SCHEMATIC LOCATION
R1540	E7
R1541	E6
R1542	F7
R1543	F7
R1544	F6
R1545	F7
R1546	G7
R1547	G6
R1548	G7
R1549	G7
R1550	G6
R1551	H5
R1552	H7
R1553	H7
R1560	D9
R1561	D10
R1563	A8
R1564	G8
R1568	E10
S501	A1
S502	A5
S503	G2
S504	H5
S505	B8
S506	C14
S507	G14
S508A	B14
S508B	C14
S509A	F14
S509B	G14
T501	E22
V501	B11
V501A	A12
V501B	D12
V502	B11
V502A	A14
V502B	D14
V503A	B18
V503B	D18
V504A	E12
V504B	H12
V505	C11
V505A	E14
V505B	H14
V506	C11
V506A	E18
V506B	G18
V507A	C21
V507B	C22
V508A	D23
V508B	C24
V509	B21

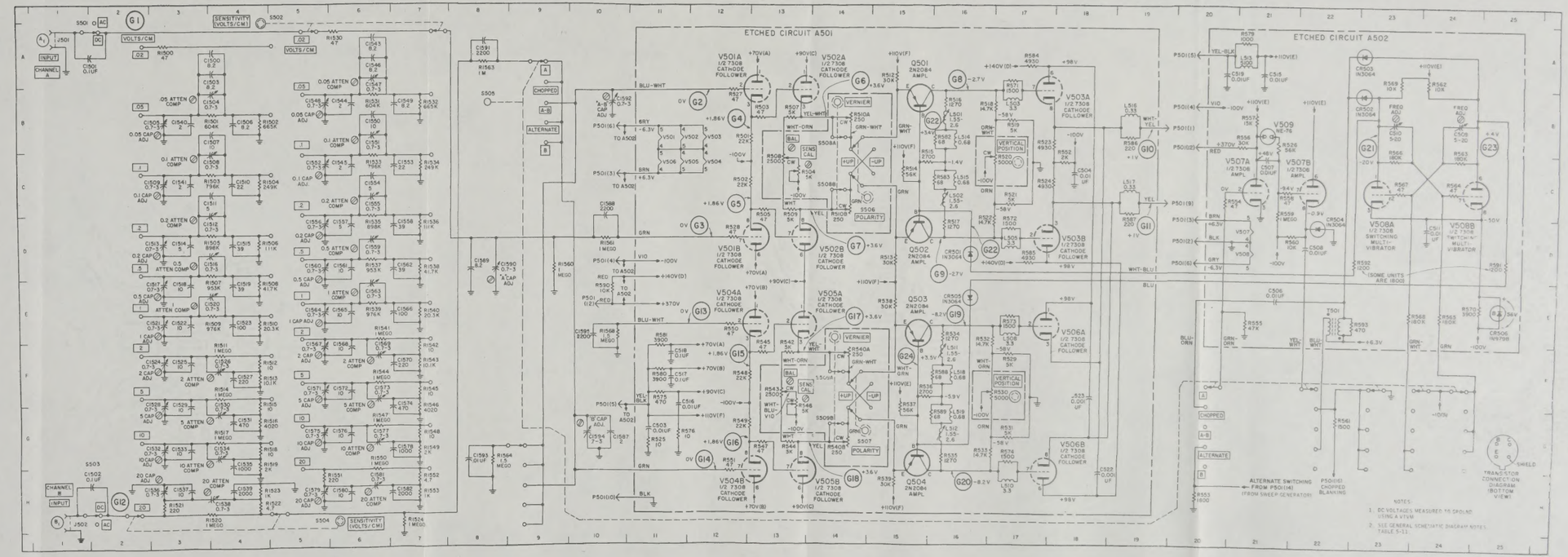
ETCHED CIRCUIT A501
ETCHED CIRCUIT A502
V501A 1/2 7308 CATHODE FOLLOWER
V501B 1/2 7308 CATHODE FOLLOWER
V502A 1/2 7308 CATHODE FOLLOWER
V502B 1/2 7308 CATHODE FOLLOWER
V503A 1/2 7308 CATHODE FOLLOWER
V503B 1/2 7308 CATHODE FOLLOWER
V504A 1/2 7308 CATHODE FOLLOWER
V504B 1/2 7308 CATHODE FOLLOWER
V505A 1/2 7308 CATHODE FOLLOWER
V505B 1/2 7308 CATHODE FOLLOWER
V506A 1/2 7308 CATHODE FOLLOWER
V506B 1/2 7308 CATHODE FOLLOWER
V507A 1/2 7308 AMPL
V507B 1/2 7308 AMPL
V508A 1/2 7308 SWITCHING MULTI-VIBRATOR
V508B 1/2 7308 SWITCHING MULTI-VIBRATOR
Q501 2N2084 AMPL
Q502 2N2084 AMPL
Q503 2N2084 AMPL
Q504 2N2084 AMPL
VERNIER
POLARITY
SENS CAL
BAL
ALTERNATE SWITCHING FROM P501(14) (FROM SWEEP GENERATOR)
P501(6) CHOPPED BLANKING
TRANSISTOR CONNECTION DIAGRAM (BOTTOM VIEW)
SHIELD
NOTES:
1. DC VOLTAGES MEASURED TO GROUND USING A VTVM
2. SEE GENERAL SCHEMATIC DIAGRAM NOTES, TABLE 5-11.

Figure 5-46A. MX-2930C Dual Trace Preamplifier Schematic Diagram AN/USM-140C

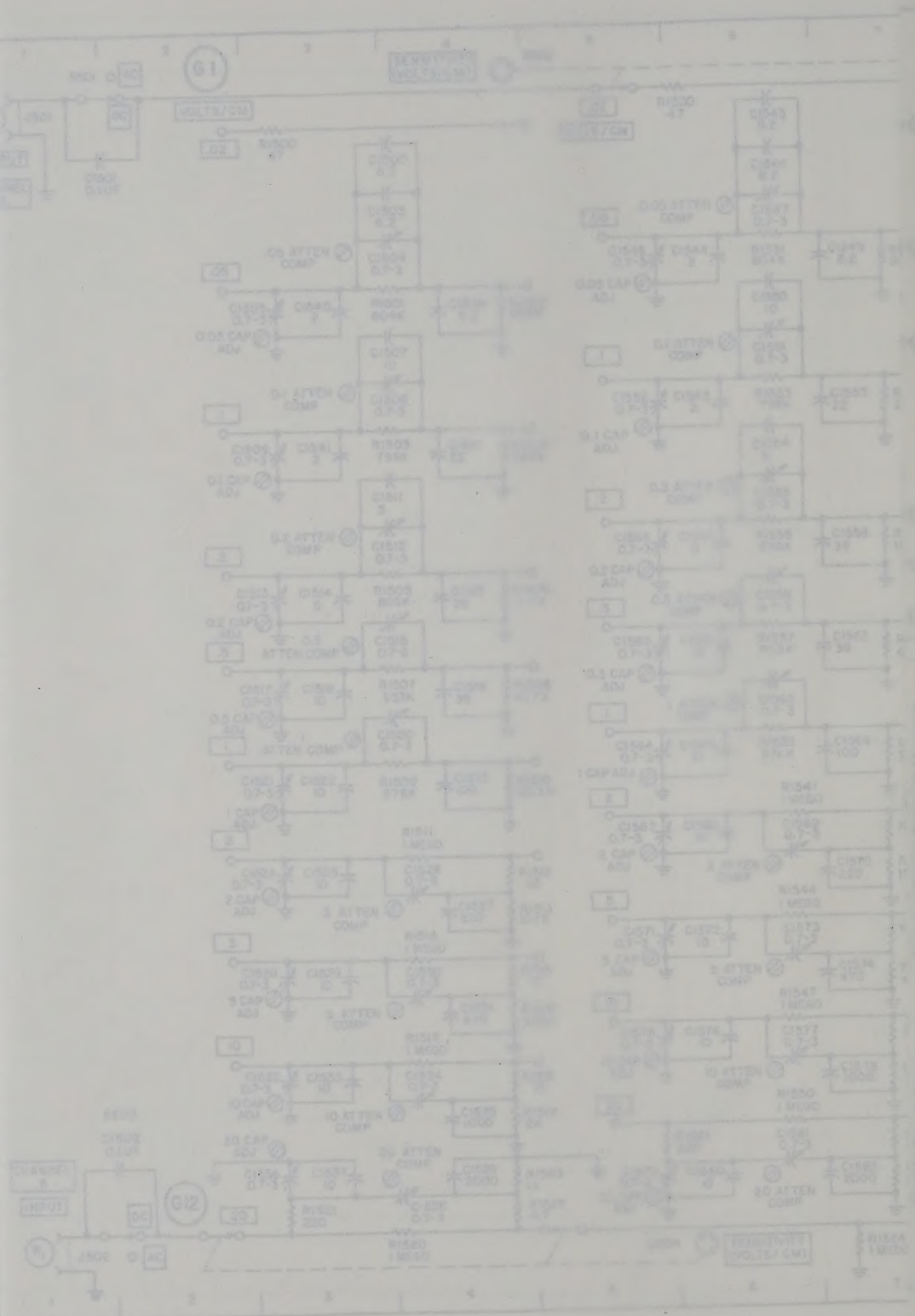

Ft Carson (25)
Ft Knox (12)
Ft Devens (5)
JCA, Ft Ritchie (5)
Army Dep (2) except
LBAD (14)
SAAD (30)
TOAD (14)
FTWOAD (10)
LEAD (7)
SHAD (3)
NAAD (5)
SVAD (5)
CHAD (3)
ATAD (10)
GENDEP (OS) (2)
Sig Sec, GENDEP (OS) (5)
Sig Dep (OS) (12)
Sig Fld Maint Shops (2)
AMS (1)
USAERDAA (2)
USAERDAW (13)
USACRREL (2)
USAEHA (5)
USAPA (5)
MAAG, Taiwan (5)
MAAG, Vietnam (5)
USA Comm Agcy, Taiwan (5)
AFIP (5)
Ft Monmouth Sig Spt Fac (5)
FGH (5)
Units org under fol TOE:
1-307 (2)
6-101 (2)
6-615 (2)
6-616 (2)
7 (2)
7-100 (2)
11-6 (2)
11-35 (2)
11-36 (2)
11-37 (2)
11-38 (2)
11-39 (2)
11-56 (2)
11-57 (2)
11-97 (2)
11-98 (2)
11-105 (2)
11-106 (2)
11-117 (2)
11-127 (2)
11-155 (2)
11-156 (2)
11-157 (2)
11-158 (2)
11-215 (2)
11-216 (2)
11-225 (2)
11-226 (2)
11-500 AA-AC (2)
11-587 (2)
11-592 (2)
11-597 (2)
17 (2)
17-100 (2)
29-1 (2)
29-11 (2)
29-15 (2)
29-16 (2)
29-21 (2)
29-25 (2)
29-26 (2)
29-35 (2)
29-36 (2)
29-41 (2)
29-51 (2)
29-55 (2)
29-56 (2)
29-75 (2)
29-85 (2)
29-86 (2)
29-87 (2)
29-105 (2)
29-109 (2)
31-105 (2)
32-56 (2)
32-77 (2)
32-500 (2)
37 (2)
37-100 (2)
44-235 (2)
44-236 (2)
44-536 (2)
44-547 (2)
44-548 (2)
44-568 (2)
47 (2)
55-50 (2)
55-89 (2)
55-99 (2)
55-405 (2)
55-407 (2)
55-417 (2)
55-457 (2)
55-458 (2)
57 (2)
57-100 (2)

NG: State AG (3); Units — same as Active Army except allowance is one copy to each unit.

USAR: None.

For explanation of abbreviations used, see AR 320-50.